dacor®
The Life of the Kitchen.®

Installation Instructions

Induction Cooktop

Models: RNCT304 and RNCT365

Part No. 107240 Rev. C

Table of Contents

Important Safety Instructions 1
Important Information About Safety Instructions 1
Safety Symbols and Labels 1
General Safety Precautions 2
Installation Specifications 3
Product Dimensions 3
Electrical Specifications 3
Planning the Location 4
Cabinet Layout 4
Cabinet Cutout Dimensions 5
Installation Instructions 7
Verify the Package Contents 7
Chassis Installation 7
Electrical Connection 7
Verifying Proper Operation 9
Installation Checklist 9

Before You Begin...

Important:

- **Installer:** In the interest of safety and to minimize problems, read these installation instructions completely and carefully before you begin the installation process. Leave these installation instructions with the customer.
- **Customer:** Keep these installation instructions for future reference and the local electrical inspector's use.

Customer Service Information

If You Need Help...

If you have questions or problems with installation, contact your Dacor dealer or the Dacor Customer Service Team. For repairs to Dacor appliances under warranty call the Dacor Distinctive Service line. When you call, have the model and serial number of the appliance ready. The model and serial number are printed on the product data label.

Dacor Customer Service Team

Phone: (800) 793-0093 ex. 2813 (U.S.A. and Canada)
Monday — Friday 6:00 A.M. to 5:00 P.M. Pacific Time

Web site: www.dacor.com

Dacor Distinctive Service (for repairs under warranty)

Phone: (800) 793-0093 ex. 2822 (U.S.A. and Canada)
Monday — Friday 6:00 A.M. to 5:00 P.M. Pacific Time

Product Data Label

- The product data label contains the model and serial number information and the electrical requirements.
- It is located on the bottom of the cooktop chassis.

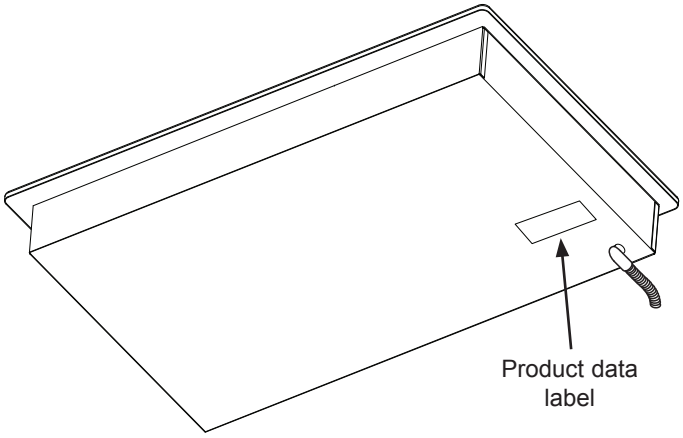

All specifications are subject to change without notice. Dacor® assumes no liability for changes to specifications.

© 2013 Dacor, all rights reserved.

Important Safety Instructions

Important Information About Safety Instructions

- The ***Important Safety Instructions*** and warnings in this manual are not meant to cover all possible problems and conditions that can occur. Use common sense and caution when installing, maintaining or operating this or any other appliance.
- Always contact the Dacor Customer Service Team about problems and conditions that you don't understand. See ***Customer Service Information***.

Safety Symbols and Labels

DANGER

Immediate hazards that **WILL** result in severe personal injury or death.

WARNING

Hazards or unsafe practices that **COULD** result in severe personal injury or death.

CAUTION

Hazards or unsafe practices that **COULD** result in minor personal injury or property damage.

DANGER

IMPORTANT: Do not store or use combustible, flammable or explosive vapors and liquids (such as gasoline) on or in the vicinity of this or any other appliance. Also keep items that could explode, such as aerosol cans, away from the cooktop. Do not store flammable or explosive materials in adjacent cabinets or areas (including above and below the cooktop).

WARNING

Persons with a pacemaker or other medical device should use caution when standing near an induction cooktop when it is in use. The electromagnetic field generated by an induction cooktop may affect operation of a pacemaker or other medical device. Consult your doctor or medical device manufacturer about your particular situation.

WARNING

WARNING – NEVER use this appliance as a space heater to heat or warm the room. Doing so may result in overheating of the appliance.

WARNING

WARNING – NEVER cover any vents, slots, holes or passages on the cooktop chassis. Doing so blocks air flow through the cooktop and may cause a fire hazard.

WARNING

Do not install this appliance outdoors and/or near water, for example, near a pool.

WARNING

WARNING: TO REDUCE THE RISK OF FIRE, ELECTRIC SHOCK, OR INJURY TO PERSONS, OBSERVE THE FOLLOWING:

1. Use this unit only in the manner intended by the manufacturer. If you have any questions, contact the manufacturer.
2. Before installing or servicing unit, switch power off at service panel and lock service disconnecting means to prevent power from being switched on accidentally. When the service disconnecting means cannot be locked, securely fasten a prominent warning device, such as a tag, to the service panel.

READ AND SAVE THESE INSTRUCTIONS

Important Safety Instructions

General Safety Precautions

To reduce the risk of fire, electric shock, serious injury or death when using your appliance, follow basic safety precautions, including the following:

⚠ WARNING

- Read the accompanying use and care manual before operating this appliance.
- Keep packaging materials away from children. Plastic sheets and bags can cause suffocation.
- If you receive a damaged product, immediately contact your dealer or builder. Do not install or use a damaged appliance. Do not install or use the appliance if the conduit is damaged.
- This appliance must be properly installed and grounded by a qualified installer according to these installation instructions prior to use. The installer must show the customer the location of the circuit breaker panel or fuse box so that they know where and how to turn off power to the cooktop. Dacor is not responsible for the cost of correcting problems caused by improper installation. The owner is responsible to make sure this appliance is properly installed.
- Do not operate the cooktop before it is completely installed in the countertop according to these instructions.
- Do not install, repair or replace any part of the cooktop unless specifically recommended in the literature accompanying it. A qualified service technician must perform all other service.
- Before performing any type of service or installation, make sure that power to the appliance is turned off at the circuit breaker panel or fuse box.
- Only use the cooktop for cooking tasks expected of a home appliance as outlined in the literature accompanying it. This cooktop is not intended for commercial or industrial use.
- Do not use corrosive chemicals or vapors on or in the vicinity of this appliance.
- Do not climb on any part of the appliance.
- Do not leave children or pets alone or unattended in the area around the cooktop. Do not allow children to play with the controls.
- Do not store items of interest to children above or on top of the cooktop. Children could be burned or injured while climbing on the appliance.
- Do not tamper with the controls. Do not adjust or alter any part of the cooktop unless specifically instructed to do so in this manual.
- To avoid a fire hazard, do not hang flammable or heat sensitive objects over the cooktop.

⚠ WARNING

- Keep flammable items, such as paper, cardboard, plastic, aluminum foil and cloth away from hot surfaces. Do not put such items on the cooktop. Do not allow pot holders to touch hot surfaces.
- Do not place anything other than cooking utensils on top of the cooktop. Do not use the cooktop as a table or shelf.
- If the cooktop is near a window, do not use long curtains as window treatment. The curtains could blow over the cooktop and create a fire hazard.
- DO NOT TOUCH THE SURFACES OF THE COOKTOP DURING OR IMMEDIATELY AFTER USE. After use, make sure these surfaces have had sufficient time to cool before touching them.
- Do not wear loose or hanging apparel while using the cooktop. Do not allow clothing to come into contact with hot surfaces and the surrounding areas during and immediately after use.
- Do not heat unopened food containers such as baby food jars and cans or eggs. Pressure build up may cause the container to burst and cause injury.
- Do not allow pans to boil dry.
- Clean the cooktop before using it for the first time according to the use and care manual.
- Non-stick coatings, when heated, can be harmful to birds. Remove birds to a separate, well-ventilated room during cooking.

Installation Specifications

Product Dimensions

All tolerances: ±1/16 (±1.6 mm), unless otherwise stated.

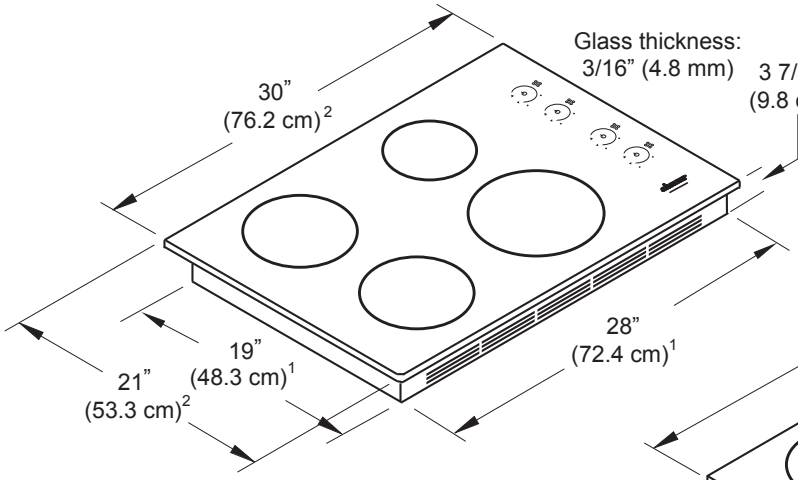

Model RNCT304

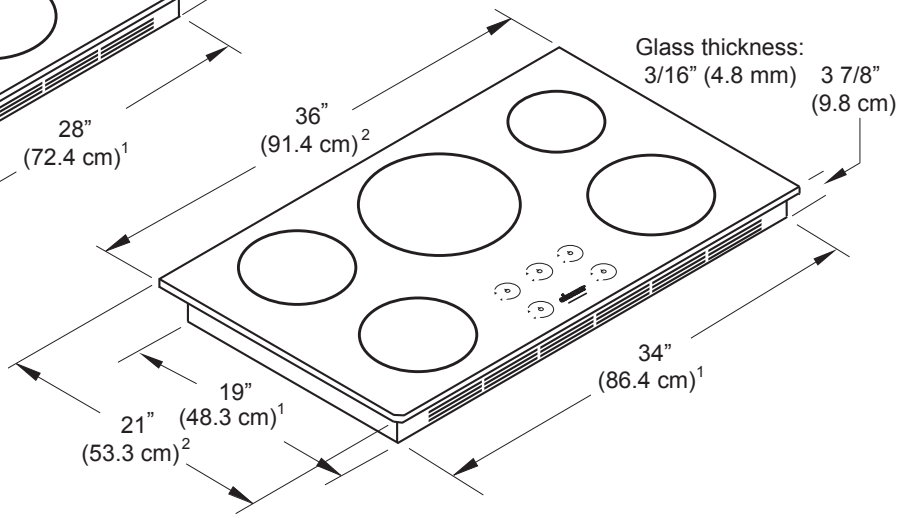

Model RNCT365

[1]Chassis depth is 1/2" wider/deeper at base of glass cooking surface assembly.

[2]Cooking surface overhangs top of chassis by 3/4" (1.9 cm) in front, back and on both sides.

Electrical Specifications

IMPORTANT

This appliance is provided with electrical connection leads in a flexible metal conduit. These leads may be a smaller gauge than the standard household wiring of the dedicated supply circuit, but they are suitable for connection to these circuits under the jurisdiction of the National Electric Code, and/or the local inspection authority.

- It is the owner's responsibility to ensure that a licensed electrician performs the installation of the electrical supply for this appliance. The electrical installation, including minimum supply wire size, must comply with the National Electric Code ANSI/NFPA 70 (latest revision) and local codes and ordinances. A copy of the standard may be obtained from:

  National Fire Protection Association
  1 Batterymarch Park
  Quincy, Massachusetts 02269-9101

- The correct voltage, frequency and amperage must be supplied to the appliance from a dedicated, grounded, circuit that is protected by a properly sized circuit breaker or time-delay fuse. If a time-delay fuse is utilized, fuse both sides of the line (L1 and L2).
- The junction box and the remote circuit breaker panel or fuse box, must be accessible when the cooktop is in place.

Model	Total Connected Load*	Dedicated Circuit Required
RNCT304	31.0 Amp. (7.44 kW)	240 Vac, 60 Hz. 3 wire** 40 Amp.
RNCT365	45.0 Amp. (10.56 kW)	240 Vac, 60 Hz. 3 wire** 50 Amp.

* These specifications are for reference only. See the product data label for exact specifications.

** Two 120 Vac hot (L1 and L2), one ground (all copper).

Installation Specifications

⚠ WARNING

- **IMPORTANT:** Observe all governing codes and ordinances during planning and installation. Contact your local building department for further information.
- To reduce the risk of a fire hazard, cooktop malfunction and/or damage to the appliance, all minimum/maximum clearances shown in these instructions must be met or exceeded.
- Do not attempt to modify or lengthen the conduit provided with the appliance. Do not use and extension cord.

Planning the Location

- Dacor recommends installing a non-combustible material on the rear wall behind the cooktop. To avoid a fire hazard, do not install the cooktop between two tall cabinets.
- Carefully check the location where the cooktop is to be installed. It should be placed for convenient access.
- To reduce the risk of personal injury caused by reaching over a hot appliance, cabinet storage space located directly above the cooktop should be avoided. If cabinet storage is to be provided, the risk can be reduced by installing a range hood.
- Installation above a drawer is not recommended. Empty space below is required for installation and ventilation.
- Make certain that electrical power meeting the specifications on page 3 can be provided in the selected location and is permitted by local building codes. Locate the junction box within reach of the included 48 inch long (122 cm) cooktop power conduit attached at the bottom right rear of the chassis. Make sure the underside of the cooktop and the junction box are accessible for inspection and service.
- To avoid damage top the countertop, bond the countertop only with adhesive that is heat resistant to temperatures above 212°F (100°C).
- Do not install above this unit above a dishwasher, washer, dryer, refrigerator or freezer.

Cabinet Layout

Under Counter Clearance

IMPORTANT: To allow for ventilation, maintain a minimum of 5 3/4” (14.6 cm) clearance between the top of the counter and ANY surface below, including the upper edge of any drawers below. Also maintain a clearance of 2” (5.1 cm) between the vents on the front of the chassis and the cabinet. See diagram below.

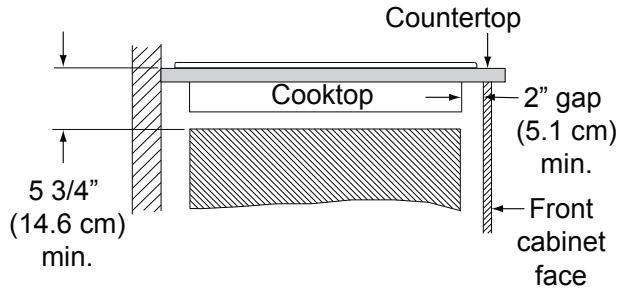

Under-Cabinet Ventilation

If the cooktop chassis is completely enclosed, provide ventilation of 7 square inches minimum into the enclosure.

Overhead Ventilation

To reduce the risk of personal injury and to reduce accumulated smoke in the room, Dacor strongly recommends installing a range hood. Install the range hood according to the accompanying installation instructions. A range hood should cover the entire cooking surface below and project horizontally a minimum of 5 inches beyond the bottom of overhead cabinets.

Countertop

Always consult the countertop manufacturer for specific installation instructions or requirements. **NOTE:** The countertop opening must accept square corners of the cooktop.

Fire Retardant Materials

Some installations may require the installation of fire retardant materials (see facing page).

Flame retardant materials bear the mark:

UNDERWRITERS LABORATORIES INC.
CLASSIFIED
MINERAL AND FIBER BOARDS.
SURFACE BURNING CHARACTERISTICS

This mark is followed by the flame spread and smoke ratings. These designations are shown as “FHC (Flame Spread)/(Smoke Developed)”. Material with “0” flame spread rating are flame retardant. Local codes may allow other flame spread ratings.

Installation Specifications

Cabinet Cutout Dimensions

See following page for flush and downdraft vent installation cutouts.

All tolerances: +1/16 (+1.6 mm), -0, unless otherwise stated.

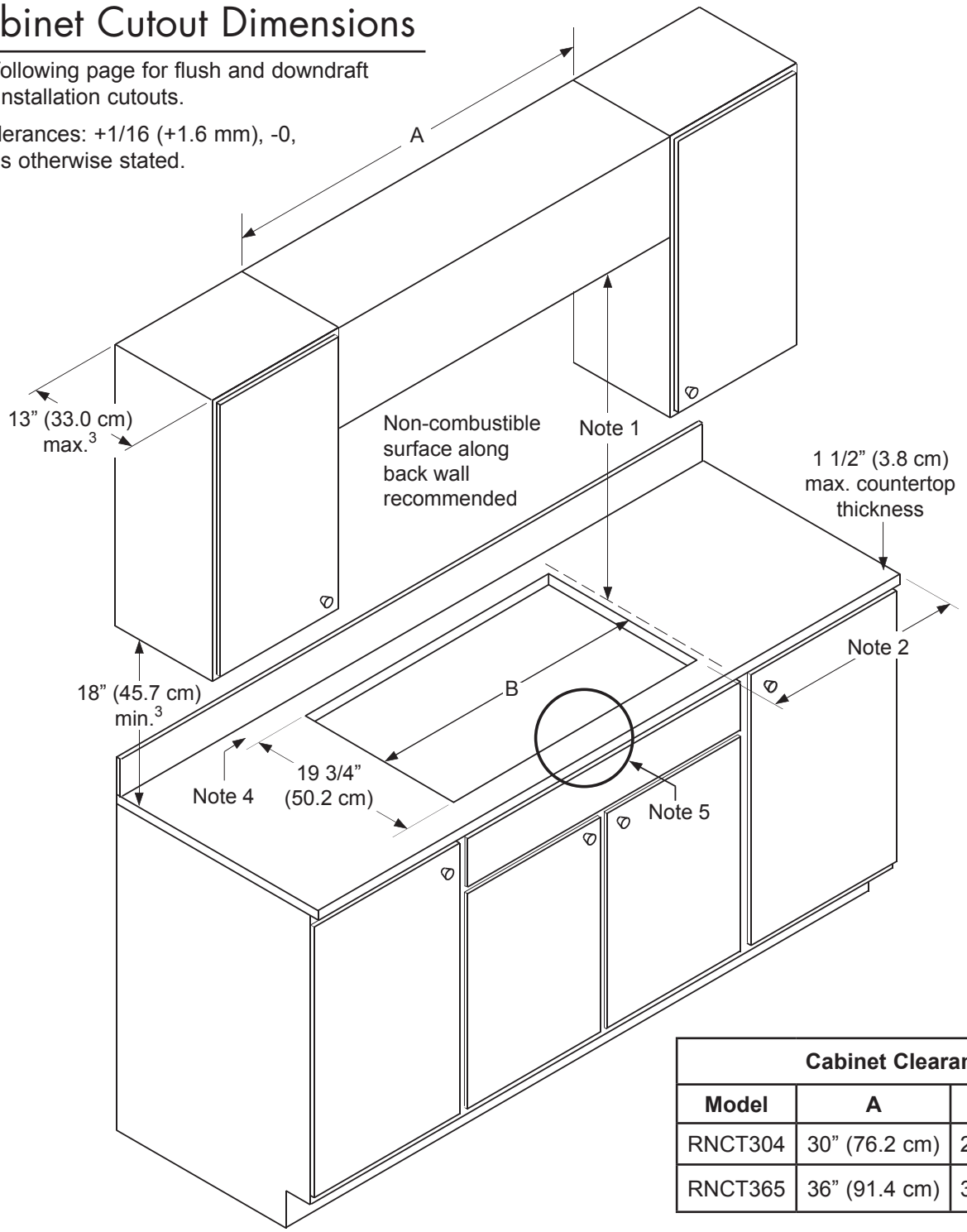

Cabinet Clearances		
Model	**A**	**B**
RNCT304	30” (76.2 cm)	28 3/4” (73.0 cm)
RNCT365	36” (91.4 cm)	34 3/4” (88.3 cm)

[1] 30 inches minimum clearance between the top of the cooking surface and the bottom of an unprotected wood or metal cabinet or A = 24 inches minimum when the bottom of wood or metal cabinet is protected by not less than 1/4 inch thick flame retardant material covered with not less than #28 gage sheet steel, .015 inch thick stainless steel, .024 inch thick aluminum, or .020 inch thick copper.

[2] Distance to combustible side wall (both sides): 2 7/8” (7.3 cm) min. from edge of cutout, 2 1/4” (5.7 cm) min. from edge of cooking surface.

[3] This specification not applicable for cabinets more than a horizontal distance of 2 1/4” (5.7 cm) from edge of cooktop, when installed.

[4] 1 1/8” (2.9 cm) min. to combustible surface to rear. 3/4” (1.9 cm) min. to non-combustible surface to rear.

[5] Make sure proper internal spacing is maintained to allow for under-cabinet (chassis) ventilation. See facing page.

Cabinet Cutout Dimensions (cont.)

All tolerances: +1/16 (+1.6 mm), -0, unless otherwise stated.

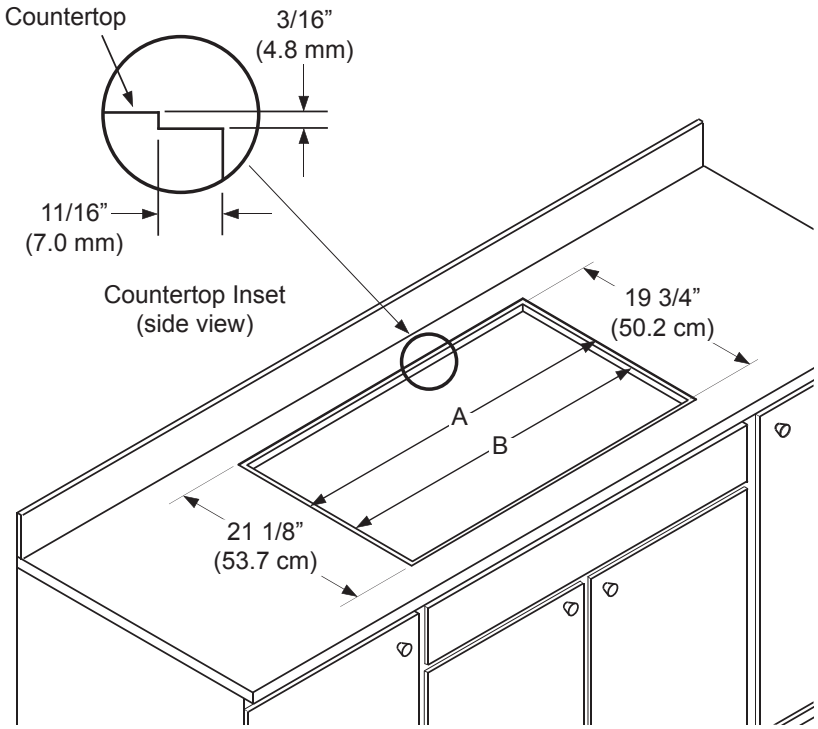

IMPORTANT: See previous page for minimum clearances to combustibles and overhead cabinets.

Width Dimensions		
Model	**A**	**B**
RNCT304	30 1/8” (76.5 cm)	28 3/4” (73.0 cm)
RNCT365	36 1/8” (91.8 cm)	34 3/4” (88.3 cm)

Flush Installation Cutout Dimensions (Cooking surface even with countertop)

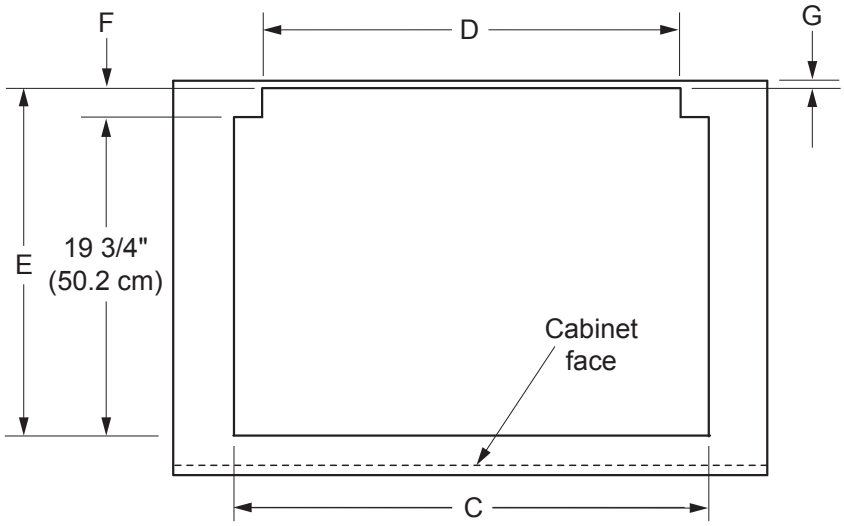

IMPORTANT:

- See previous page for minimum clearances to combustibles and overhead cabinets.
- Install only the downdraft vent models specified in the table below.
- If installing the cooktop and downdraft vent flush to the countertop, use the countertop inset dimensions shown above for the cooktop. The countertop inset for the downdraft vent will need to be lower to accommodate the top cap, which is different from model to model. Determine the inset depth from the product dimensions in the downdraft vent installation instructions. Additional sealing will be required between the cooktop chassis and the downdraft vent due to the difference in inset depth required.

Model/Configuration	(C) Cooktop Cutout Width	(D) Downdraft Vent Cutout Width	(E) Total Cutout Depth	(F) Downdraft Vent Cutout Depth	(G) Min. Rear Countertop Overhang
RNCT304 cooktop with ERV30[15]/PRV30 vent	28 3/4” (73.0 cm)	27 3/4” (70.5 cm)	22 1/2” (57.2 cm)	2 3/4” (7.0 cm)	3/8” (1.0 cm)
RNCT304 cooktop with RV30 downdraft vent			22 1/4” (56.5 cm)	2 1/2” (6.4 cm)	5/8” (1.6 cm)
RNCT365 cooktop with ERV36[15]/PRV36 vent	34 3/4” (88.3 cm)	33 3/4” (85.7 cm)	22 1/2” (57.2 cm)	2 3/4” (7.0 cm)	3/8” (1.0 cm)
RNCT365 cooktop with RV36 downdraft vent			22 1/4” (56.5 cm)	2 1/2” (6.4 cm)	5/8” (1.6 cm)

RNCT Cooktop with Downdraft Vent Cutout Dimensions (top view)

Installation Instructions

Verify the Package Contents

Verify that all the items below have been provided. If any item is missing or damaged, please contact your dealer immediately. Do not install a damaged or incomplete appliance. Make sure that you have everything necessary to ensure proper installation before proceeding.

- Foam tape
- Hold down brackets (2)
- Glass scraper (PN 82499)
- Dacor Cooktop Cleaning Creme (PN A300)
- Product literature

Chassis Installation

WARNING

If the electrical service provided does not meet the specifications on page 3, do not proceed with installation. Call a licensed electrician to install the required wiring.

IMPORTANT

Do not use a hardening compound, glue or caulk to seal the cooktop into place. The cooktop must be readily removable if service is required. Removal of any sealant to service the unit will be performed at the customer's expense.

1. Peel the protective backing off of the foam tape provided. Attach it to the underside of the cooktop mounting surface, as close to the edge of the glass as possible.
2. Lower the cooktop into the cutout and center it. Make sure the meets all minimum clearances stated on page 5.

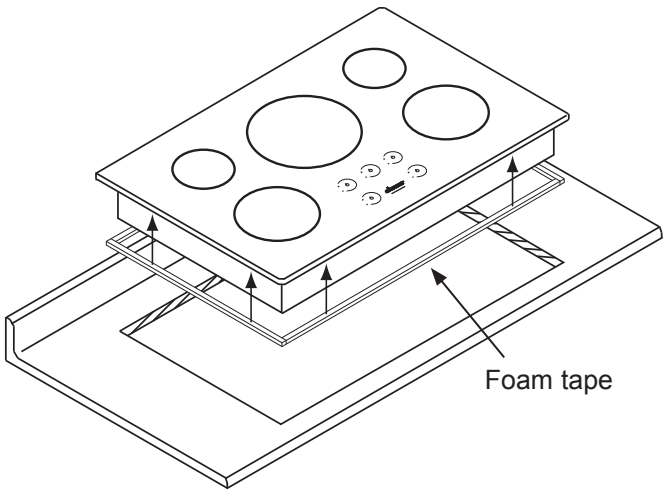

3. Secure the cooktop to the countertop using the two (2) hold-down brackets provided. Slide the brackets into the slots located on the left and right sides of the chassis, then tighten the screws to the underside of the countertop. Do not overtighten.

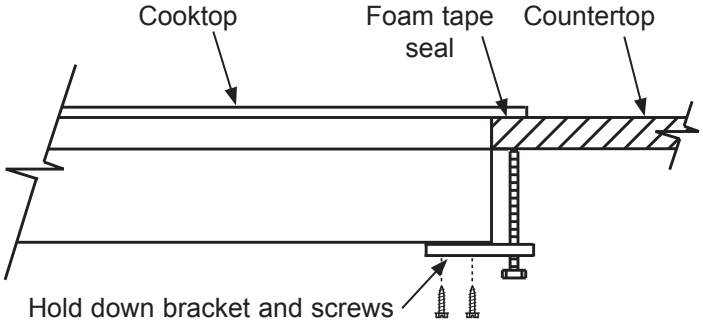

Hold Down Bracket Installation - Side View

Electrical Connection

WARNING

- To prevent an electric shock or fire hazard, turn off power to the circuit at the circuit breaker panel or fuse box prior to connecting the cooktop wiring.
- Failure to connect the cooktop electrical wiring as specified may result in an electric shock hazard, a fire hazard and damage to the appliance.
- Connect the ground (green) wire from the appliance to a grounded, metallic, permanent wiring system or grounding conductor. DO NOT ground the appliance to a neutral (white) house supply wire. A separate ground wire must be utilized.
- This appliance must be properly grounded according to these instructions any time power is applied.
- If aluminum house supply wiring is utilized, splice the appliance copper wires to the aluminum house wiring using special connectors designed and agency-certified for joining copper and aluminum. Follow the connector manufacturer's recommended procedure carefully. Improper connection may result in a fire hazard.

IMPORTANT

Provide slack in the conduit to allow the cooktop to slide out for service.

1. Before proceeding, turn off power to the circuit to which the cooktop will be connected at the circuit breaker panel or fuse box.
2. Feed the appliance conduit into the junction box and attach it using a UL certified strain relief.
3. Depending upon local codes, utilize one of the two methods shown on the following page to connect the appliance to the junction box.

Three Wire Electrical Connection

IMPORTANT: No white wire connection is required for this 3-wire appliance. If there is an existing neutral (white) wire in the junction box, you must shield it for compliance with the National Electrical Code.

See diagram on right.

1. Separate the wires coming out of the appliance conduit.
2. Connect the black wire from the appliance conduit to the black (L1) supply wire in the junction box.
3. Connect the red wire from the appliance conduit to the red (L2) supply wire in the junction box.
4. Connect the green wire from the appliance conduit to the green (ground) wire in the junction box.

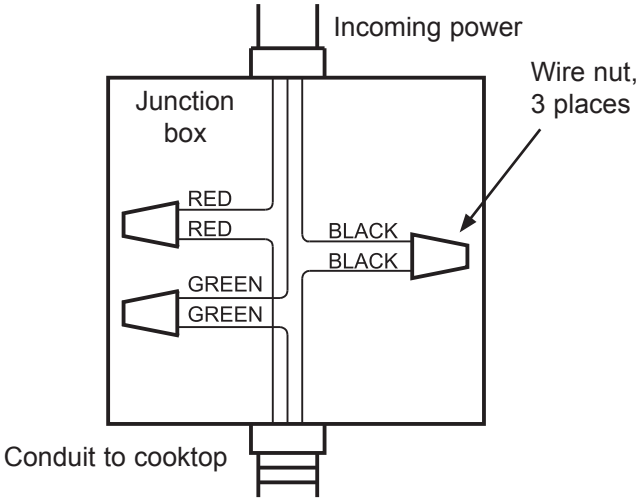

Three Wire Connection

Three Wire Electrical Connection with External Ground

WARNING

- Do not ground the appliance to a gas supply pipe or hot water pipe.
- If connecting the ground wire to a grounded cold water pipe, connect it using a separate copper grounding wire (No. 10 minimum) and a clamp with an external grounding screw. The grounded cold water pipe must have metal continuity to electrical ground and must not be interrupted by insulating materials. Any insulating materials must be jumped with a minimum 4 AWG wire to establish continuity to ground. See diagram below right.

NOTE

If the junction box has been properly grounded by a licensed electrician, the green (ground) wire from the appliance conduit may be connected to the junction box using a loop terminal.

See diagrams on right.

1. Separate the wires coming out of the appliance conduit.
2. Connect the black wire from the appliance conduit to the black (L1) supply wire in the junction box.
3. Connect the red wire from the appliance conduit to the red (L2) supply wire in the junction box.
4. Connect the green wire from the appliance conduit to a grounded cold water pipe as shown. Jumper any insulating materials as shown with a length of No. 4 copper wire. Securely clamp the wire to bare metal at both ends.

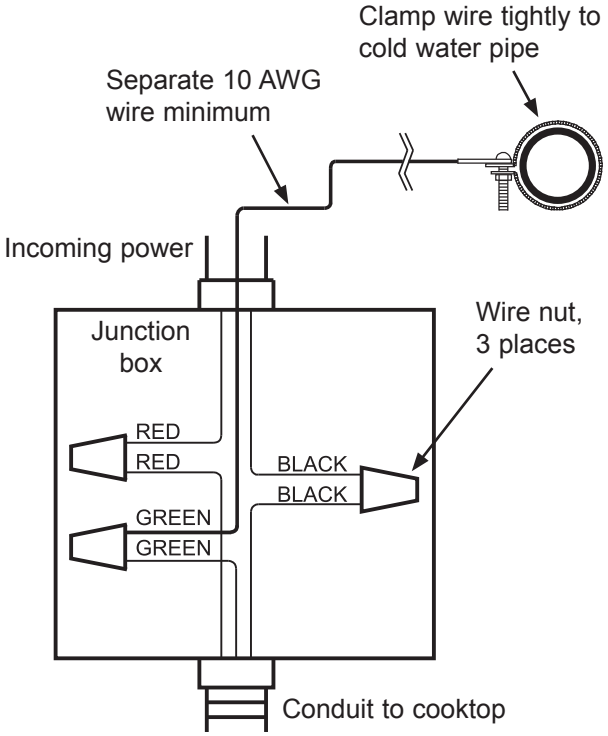

Three Wire Connection with External Ground

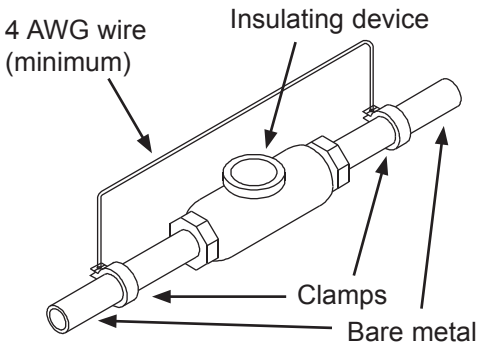

Insulated Pipe Jumper

Verifying Proper Operation

⚠ WARNING

Read the accompanying use and care manual completely before using the cooktop.

1. Remove all items from the cooktop. Remove any tape that may be attached to the cooktop.
2. Clean the cooking surface according to the use and care manual prior to use.
3. Turn on power to the cooktop at the circuit breaker panel or fuse box. When the unit is powered on, the controls will automatically cycle on and then turn off.
4. Place a pot 1/4 full with water on one of the cooking elements. Match the size of the pot to the size of the cooking element. **NOTE:** You must use a pot that attracts a magnet on the pan bottom to test operation.
5. Hold your finger on the **ON/OFF** key for corresponding control for one second to activate. The power light should come.

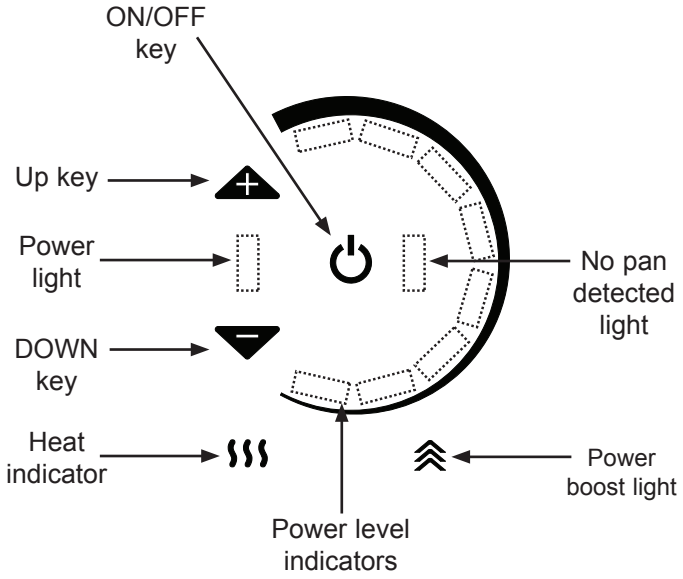

Cooktop Controls

6. Touch the power level **UP** key (▲) repeatedly. Verify that the power level goes up.
7. Touch **DOWN** (▼) repeatedly. Verify that the power level goes down.
8. Touch the power level **UP** key (▲) repeatedly until the power boost light comes on.
9. Once the pot begins to heat, verify that the heat indicator light comes on.
10. Touch **ON/OFF** to turn off the element.
11. Repeat steps 4 through 10 for the remaining elements.

NOTE: If the cooktop does not operate properly, follow these troubleshooting steps:

- ◊ Verify that power is supplied to the cooktop.
- ◊ Check for proper electrical connections.
- ◊ Repeat the above tests.
- ◊ If the appliance still does not work, contact Dacor Distinctive Service at (800) 793-0093 ex. 2822. Do not attempt to repair the appliance yourself. If you need service, be sure to have the model and serial numbers available when you call. They are located on the label on the bottom of the appliance chassis.

Installation Checklist

⚠ WARNING

- To ensure a safe and proper installation, the following checklist should be completed by the installer to ensure that no part of the installation has been overlooked.
- Proper installation is the responsibility of the homeowner. The importance of proper installation of your Dacor cooktop cannot be overemphasized.

☐ Have all minimum cabinet/countertop clearances been met or exceeded? See pages 4 and 5.

☐ Is the cooktop wired and grounded according to these instructions and in accordance with all applicable electrical codes and ordinances? See pages 3 and 7.

☐ Is the cooktop secured using the provided hold-down brackets? See page 7.

☐ Has proper operation been verified?

☐ Has the warranty been activated on-line or the warranty card filled out completely and mailed?

dacor®

The Life of the Kitchen.®

Dacor ● 14425 Clark Avenue, City of Industry, CA 91745 ● Phone: (800) 793-0093 ● Fax: (626) 403-3130 ● www.dacor.com