OPERATOR'S MANUAL

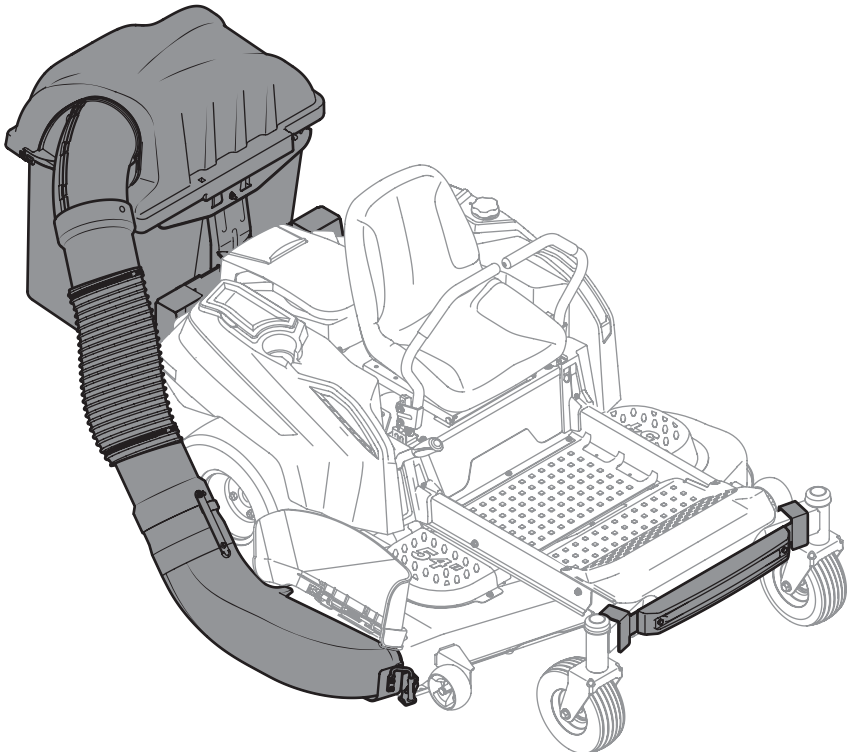

Twin Rear Bagger - Model No. 19A70034OEM

⚠ WARNING

READ AND FOLLOW ALL SAFETY RULES AND INSTRUCTIONS IN THIS MANUAL BEFORE ATTEMPTING TO OPERATE THIS MACHINE.
FAILURE TO COMPLY WITH THESE INSTRUCTIONS MAY RESULT IN PERSONAL INJURY.

MTD LLC, P.O. BOX 361131 CLEVELAND, OHIO 44136-0019

Printed In USA

FORM NO. 769-08747
(January 7, 2013)

To The Owner

1

Thank You

Thank you for purchasing a bagging attachment manufactured by MTD. It was carefully engineered to provide excellent performance when properly operated and maintained.

Please read this entire manual prior to operating the equipment. It instructs you how to safely and easily set up, operate and maintain this attachment. Please be sure that you, and any other persons who will operate the machine, carefully follow the recommended safety practices at all times. Failure to do so could result in personal injury or property damage.

All information in this manual is relative to the most recent product information available at the time of printing. Review this manual frequently to familiarize yourself with the attachment, its features and operation. Please be aware that this Operator's Manual may cover a range of product specifications for various models. Characteristics and features discussed and/or illustrated in this manual may not be applicable to all models. We reserve the right to change product specifications, designs and equipment without notice and without incurring obligation.

If you have any problems or questions concerning this attachment, phone your local authorized MTD service dealer or contact us directly. MTD's Customer Support telephone numbers, website address and mailing address can be found on this page. We want to ensure your complete satisfaction at all times.

Throughout this manual, all references to *right* and *left* side of the machine are observed from the operating position

Table of Contents

Safe Operation Practices 3
Carton Contents & Hardware Packs 6
Assembly & Installation 8
Operation 16
Parts List 18
Warranty ..... Back Cover

Record Product Information

Before setting up and operating your new equipment, please locate the model plate on the equipment and record the information in the provided area to the right. You can locate the model plate by looking at the topside of the bagger cover. This information will be necessary, should you seek technical support via our web site, Customer Support Department, or with a local authorized service dealer.

Model Number

Serial Number

Customer Support

Please do NOT return the machine to the retailer or dealer without first contacting our Customer Support Department.

If you have difficulty assembling this product or have any questions regarding the controls, operation, or maintenance of this machine, you can seek help from the experts. Choose from the options below:

◊ Visit us on the web at www.mtdproducts.com

◊ Call a Customer Support Representative at (800) 800-7310 or (330) 220-4683

◊ Write us at MTD LLC • P.O. Box 361131 • Cleveland, OH • 44136-0019

Important Safe Operation Practices

2

WARNING! This symbol points out important safety instructions which, if not followed, could endanger the personal safety and/or property of yourself and others. Read and follow all instructions in this manual before attempting to operate this machine. Failure to comply with these instructions may result in personal injury.
When you see this symbol. **HEED ITS WARNING!**

DANGER! This attachment was built to be used according to the safe operation practices in this manual. Carelessness or error on the part of the operator can result in serious injury. Mowers are capable of amputating hands and feet and throwing objects. Failure to observe the following safety instructions as well as the instructions provided with your mower, could result in serious injury or death.

General Operation

1. Read, understand, and follow all instructions on your equipment and in their manuals before attempting to assemble and operate. Keep this manual in a safe place for future and regular reference and for ordering replacement parts.
2. To help avoid blade contact or a thrown object injury, keep bystanders, helpers, children and pets at least 75 feet from the mower while it is in operation. Stop machine if anyone enters the area.
3. Thoroughly inspect the area where the equipment is to be used. Remove all stones, sticks, wire, bones, toys, and other foreign objects which could be picked up and thrown by the blade(s). Thrown objects can cause serious personal injury.
4. Always wear safety glasses or safety goggles during operation and while performing an adjustment or repair to protect your eyes. Thrown objects which ricochet can cause serious injury to the eyes.
5. Do not operate the mower without the discharge cover or entire grass catcher in its proper place. A missing or damaged discharge cover or grass bag attachment component may result in thrown objects or blade contact injuries.
6. Do not put hands or feet near rotating parts or under the cutting deck. Contact with the blade(s) can amputate hands and feet.
7. Shut off mower's engine and wait for blades to come to a complete stop before unclogging mower's discharge opening or bagger parts.
8. Slow down before turning. Operate the machine smoothly. Avoid erratic operation and excessive speed. Be aware that a grass catcher attachment can affect the handling characteristics of your mower.
9. Disengage blade(s), set parking brake, stop engine and wait until the blade(s) come to a complete stop before opening bagger attachment's top cover, removing grass catcher, emptying grass, unclogging chute, removing any grass or debris, or making any adjustments.
10. Never leave a running machine unattended. Always turn off blade(s), place transmission in neutral, set parking brake, stop engine and remove key before dismounting.
11. Your machine is designed to cut normal residential grass of a height no more than 10". Do not attempt to mow through unusually tall, dry grass (e.g., pasture) or piles of dry leaves. Dry grass or leaves may contact the engine exhaust and/or build up on the mower deck presenting a potential fire hazard.
12. If situations occur which are not covered in this manual, use care and good judgment. Contact your customer service representative for assistance.

Slope Operation

Slopes are a major factor related to loss of control and tip-over accidents which can result in severe injury or death. Attachments can also affect the stability of the machine. All slopes require extra caution.

For your safety, use the slope gauge included as part of this manual to estimate the angle of slopes before operating this machine on a sloped or hilly area. If the slope is greater than 10 degrees as shown on the slope gauge, do not operate the mower with the grass bag attachment installed on that area or serious injury could result.

Do:

1. Mow up and down slopes, not across. Exercise extreme caution when changing direction on slopes.
2. Watch for holes, ruts, bumps, rocks, or other hidden objects. Uneven terrain could overturn the machine. Tall grass can hide obstacles.

3. Use slow speed. Choose a low enough speed setting so that you will not have to stop or shift while on the slope. Tires may lose traction on slopes even though the brakes are functioning properly. Always keep machine in gear when going down slopes to take advantage of engine braking action.
4. Follow the manufacturer's recommendations for wheel weights or counterweights to improve stability.
5. Keep all movement on the slopes slow and gradual. Do not make sudden changes in speed or direction. Rapid engagement or braking could cause the front of the machine to lift and rapidly flip over backwards which could cause serious injury.
6. Avoid starting or stopping on a slope. If tires lose traction, disengage the blade(s) and proceed slowly straight down the slope.

Do Not:

1. Do not turn on slopes unless necessary; then, turn slowly and gradually downhill, if possible.
2. Do not mow near drop-offs, ditches or embankments. The mower could suddenly turn over if a wheel is over the edge of a cliff, ditch, or if an edge caves in.
3. Do not try to stabilize the machine by putting your foot on the ground.
4. Do not use a grass catcher on steep slopes.
5. Do not mow on wet grass. Reduced traction could cause sliding.

General Service

1. Before cleaning, repairing, or inspecting, make certain the blade(s) and all moving parts have stopped. Disconnect the spark plug wire and ground against the engine to prevent unintended starting.
2. Keep all nuts, bolts, and screws tight to be sure the equipment is in safe working condition.
3. Never tamper with your mower's safety interlock system or other safety devices. Check their proper operation regularly.
4. Never attempt to make adjustments or repairs while the mower's engine is running.
5. Grass catcher components and the discharge cover are subject to wear and damage which could expose moving parts or allow objects to be thrown. For safety protection, frequently check components and replace immediately with original equipment manufacturer's (O.E.M.) parts only, listed in this manual. Use of parts which do not meet the original equipment specifications may lead to improper performance and compromise safety!
6. Maintain or replace safety and instruction labels, as necessary.

Safety Symbols

This table depicts and describes safety symbols that may appear on this product. Read, understand, and follow all instructions on the machine before attempting to assemble and operate.

Symbol	Description
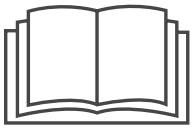	READ THE OPERATOR'S MANUAL(S) Read, understand, and follow all instructions in the manual(s) before attempting to assemble and operate
	STOP Turn off the engine before opening the bagger cover.

WARNING! Your Responsibility—Restrict the use of this power machine to persons who read, understand and follow the warnings and instructions in this manual and on the machine.

SAVE THESE INSTRUCTIONS!

Slope Gauge

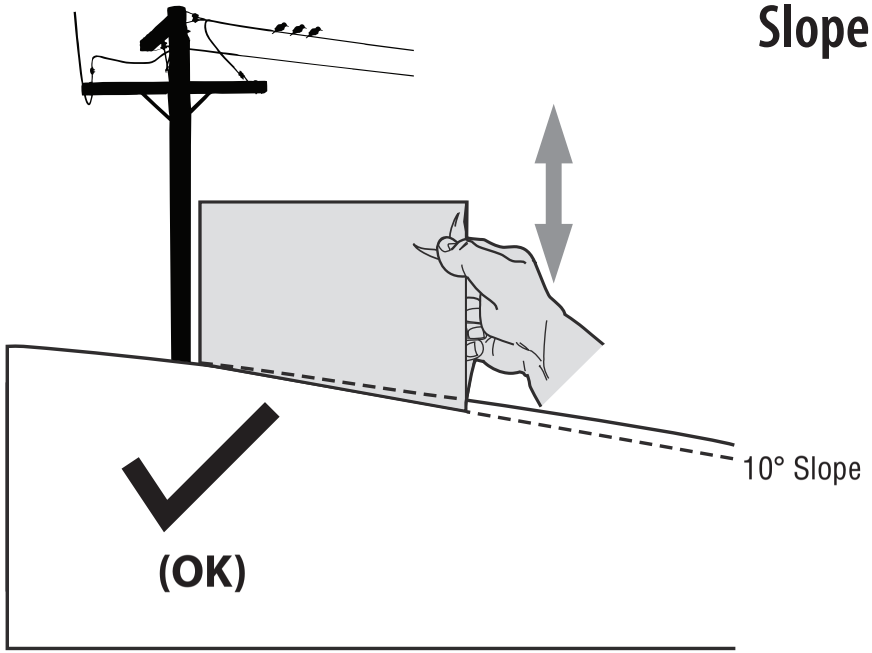

Figure 1

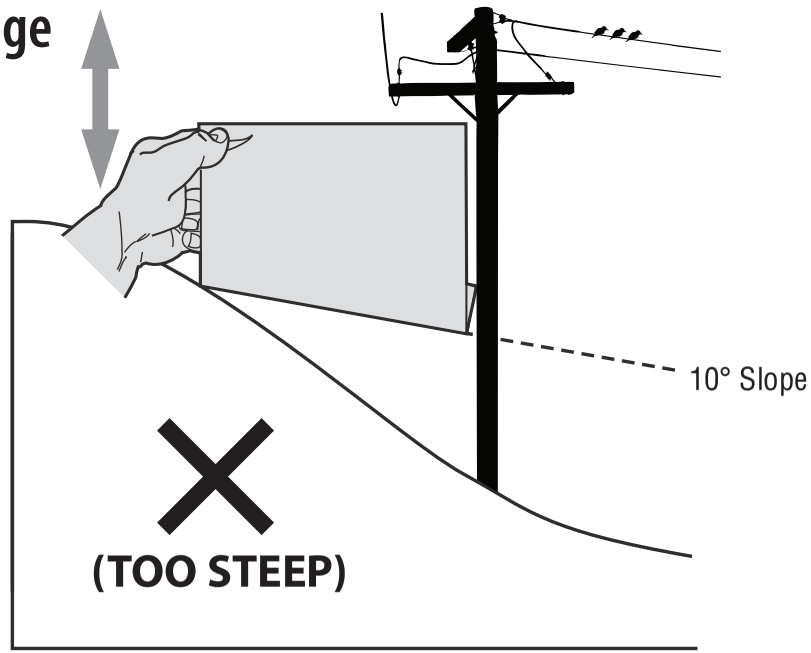

Figure 2

10° dashed line

USE THIS SLOPE GAUGE TO DETERMINE IF A SLOPE IS TOO STEEP FOR SAFE OPERATION!

To check the slope, proceed as follows:

1. Remove this page and fold along the dashed line.
2. Locate a vertical object on or behind the slope (e.g. a pole, building, fence, tree, etc.)
3. Align either side of the slope gauge with the object (See Figure 1 and Figure 2).
4. Adjust gauge up or down until the left corner touches the slope (See Figure 1 and Figure 2).
5. If there is a gap below the gauge, the slope is too steep for safe operation (See Figure 2 above).

WARNING! Slopes are a major factor related to tip-over and roll-over accidents which can result in severe injury or death. Do not operate machine on slopes in excess of 10 degrees. All slopes require extra caution. If you cannot back up the slope or if you feel uneasy on it, do not mow it. Always mow up and down slopes, never across the face of slopes.

Contents of Carton

3

Before beginning installation, remove all parts from the carton to make sure everything is present. Carton contents are listed below and shown in Fig. 3-1. The hardware packs included in this kit are detailed on the following page.

- Hitch Bracket Kit *(5 Pcs.: 2 side & 1 cross mount, 2 wt. mounts)*
- Two Chute Tube Extensions
- Flexible Tube Extension
- Discharge Chute Elbow
- Upper Chute Tube
- Grass Catcher Cover
- Two Grass Bag Assemblies
- Two Adhesive Foam Strips
- Two Wide Adhesive Rubber Strips
- Upper Chute Support
- Hinge Cover Pin
- Bagging Blades *(3 blades total)*
- Deck Baffle
- Chute Stop Bracket
- Upright Support
- Bag Support Assembly
- Weight Bar
- Chute Discharge Plate
- Bracket Adapter Kit *(Not needed for installation on this unit)*
- Three Hardware Packs *(Detailed & illustrated on next page)*

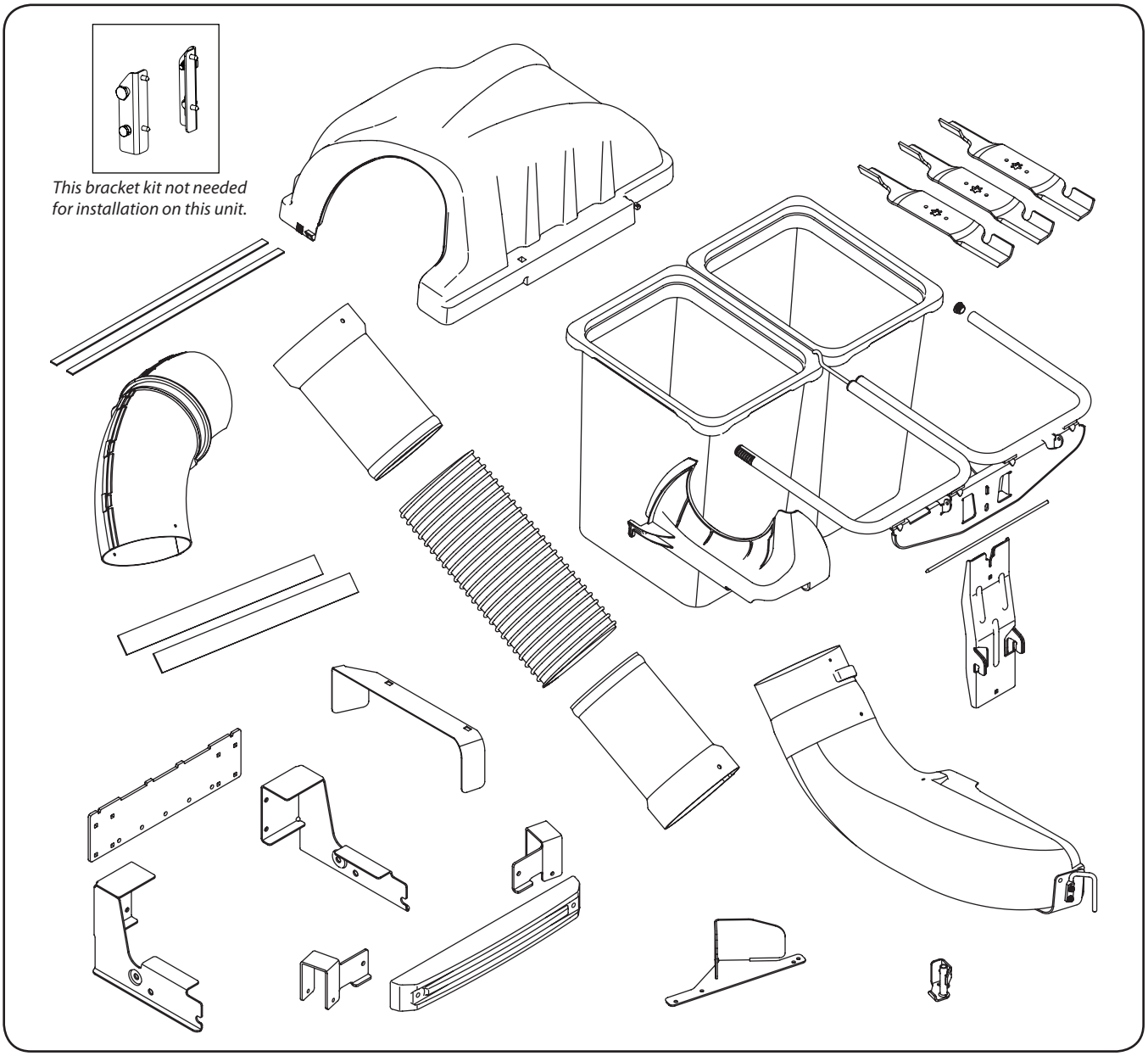

Figure 3-1

CONTENTS OF HARDWARE PACK

This grass collector kit is shipped with three loose hardware packs enclosed and one set of hardware packed with the upright mounting bracket. Please check your hardware packs against the illustrations below. The quantities for each item is listed in parenthesis.

Hardware Pack 689-00320

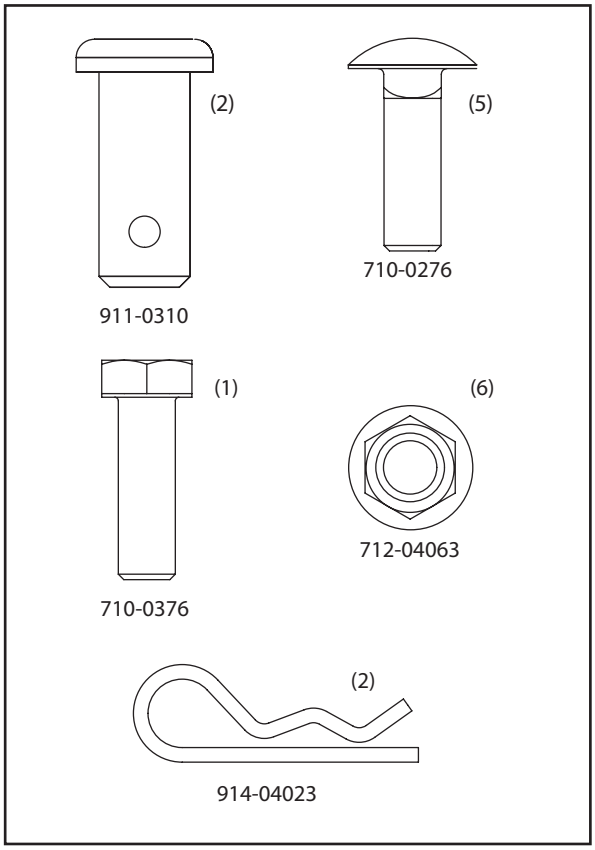

Hardware Pack 689-00325

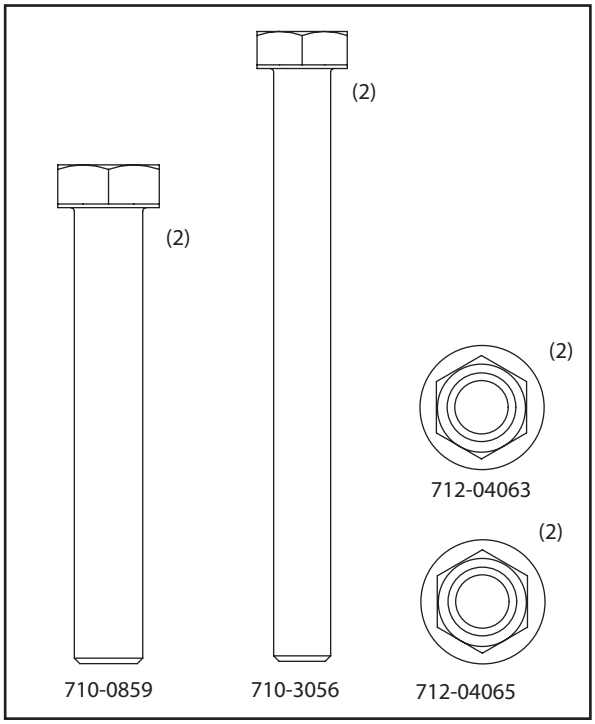

Hardware Pack 689-00326

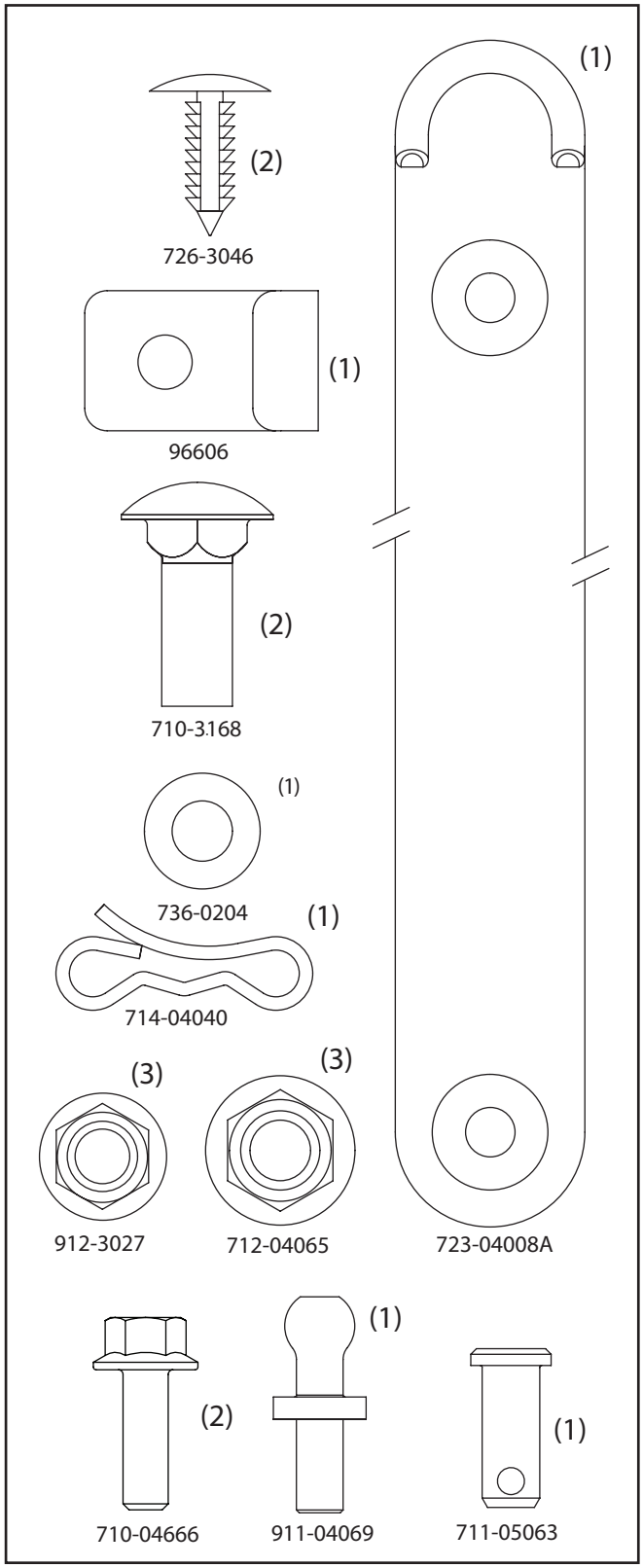

NOTE: References to left, right, front and rear of the tractor are from the operator's position, unless otherwise stated.

- Before assembly, place the tractor on a firm, level surface, disengage the PTO, stop the tractor engine and set the parking brake.

Assemble Mounting Brackets

To assemble the bagger mounting assembly, locate the mounting assembly parts, as shown in Figure 4-1, and follow these steps:

1. Attach the two hitch side brackets to the rear attachment bracket using four 710-0276 carriage bolts and 712-04063 flange lock nuts from hardware pack 689-00320. See Figure 4-1.

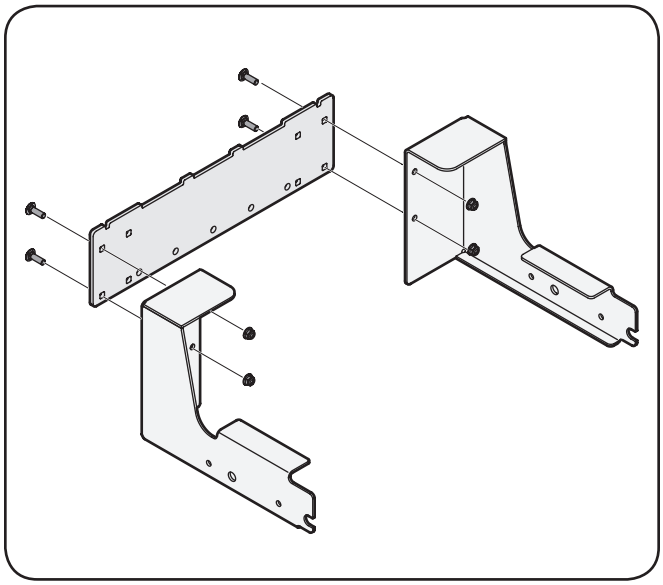

Figure 4-1

Note: When assembling this mounting assembly, it is best to not fully tighten the bracket at this time. This will facilitate the mounting process in later steps, which will then require fully tightening this mounting assembly.

Mount Assembly on Tractor

Install mounting assembly on tractor as follows:

1. Slide the mounting bracket assembly along the frame rails of the tractor until the hooks in the mounting brackets align under the shoulder bolts on your tractor, as seen in Figure 4-2.

   Note: Remove rear tube bumper if equipped.

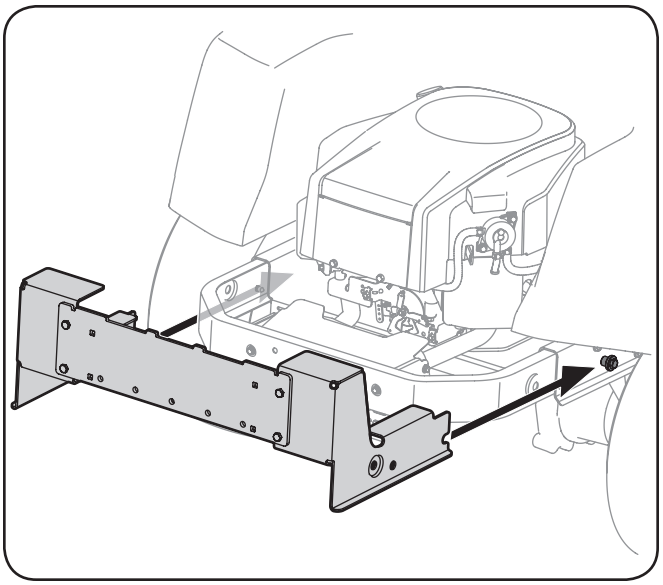

Figure 4-2

2. Secure the mounting bracket assembly to the tractor using two 911-0310 clevis pins and 914-04023 cotter pins from hardware pack 689-00320. See Figure 4-3.

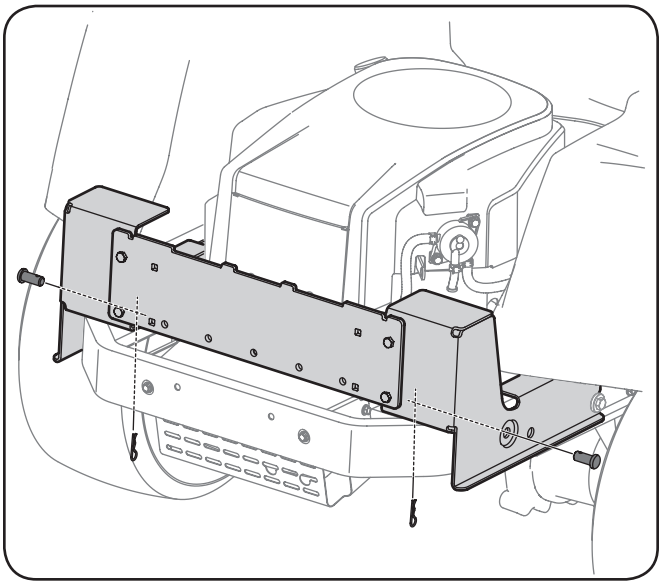

Figure 4-3

3. Tighten all of the hardware installed at this time.
4. Install the upright support bracket onto the mounting assembly on the tractor by hooking it over the mounting assembly as shown in Figure 4-4.

5. Secure the upright support bracket to the mounting assembly in the mounting hole just to the right of center, as indicated in Figure 4-4, with a 710-0376 hex bolt and 712-04063 flange lock nut from hardware pack 689-00320. See Figure 4-4.

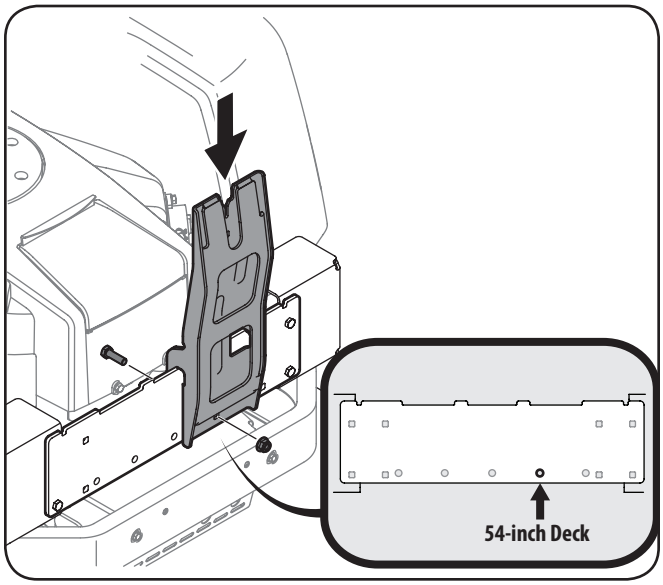

Figure 4-4

6. Install and secure the hanger assembly onto the upright support bracket using a 710-0276 carriage bolt and 712-04063 flange lock nut from hardware pack 689-00320. See Figure 4-5.

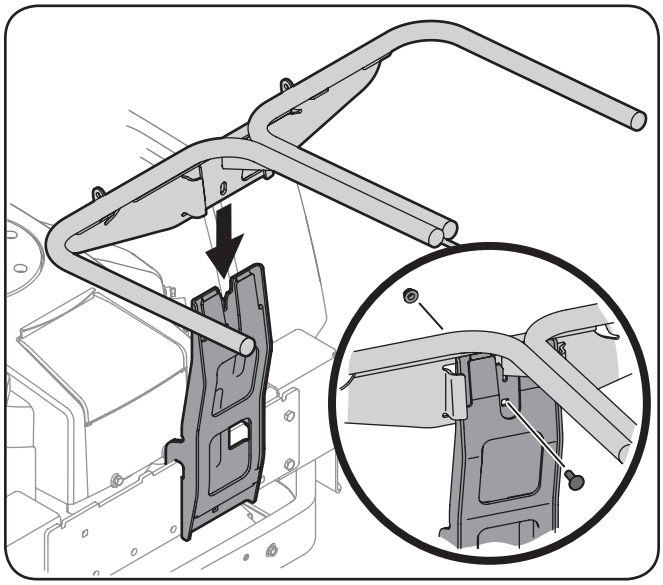

Figure 4-5

Note: The carriage bolt (710-0276), from hardware pack 689-00320, goes in the top hole with the nut facing the engine. The hex bolt (710-0376), from the same hardware pack, goes in the bottom hole.

Assembling Remaining Bagger Components

Now that the mounting brackets are assembled and are in place on the tractor, follow these steps to assemble the remaining bagger components.

1. Snap the plastic upper chute support in place by first clipping the side portion onto the bagger support rail (1) with the edge of the snap feature aligned with the line on the label, as shown in the inset of Figure 4-6.

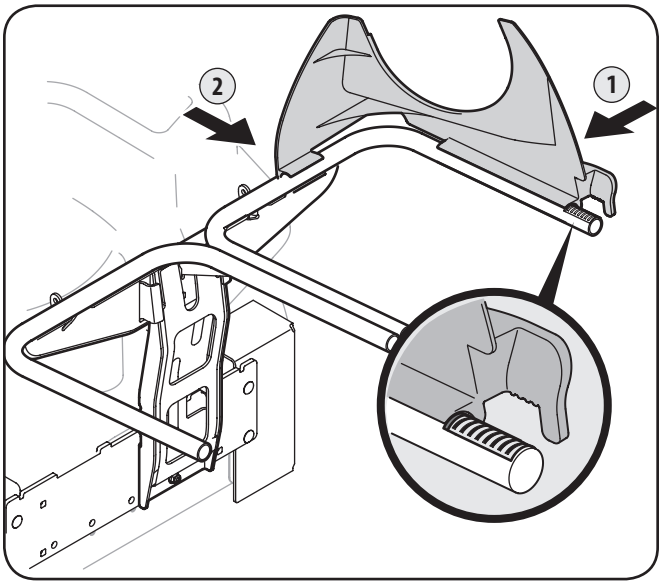

Figure 4-6

2. Snap the front side of the chute support to the rail (2), as shown in Figure 4-6.
3. ***If not already installed by the factory,*** install the bagger screen into the bagger cover by first inserting one end into the corresponding cutout mounting hole, as in Figure 4-7. Make sure to feed the screen under the lip, as in Figure 4-8.

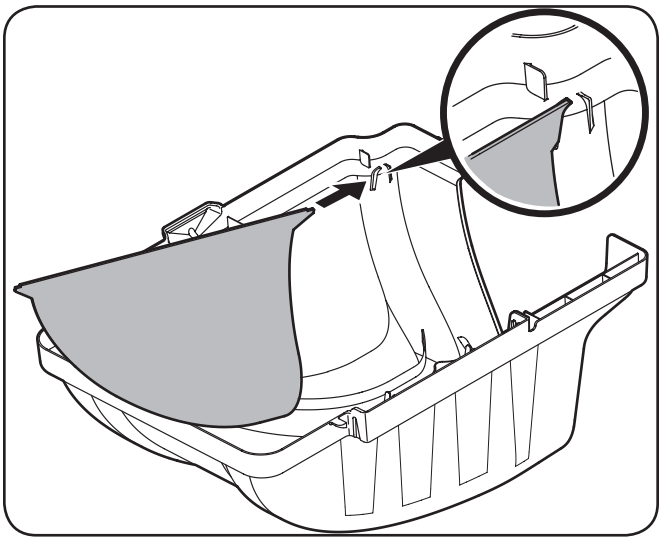

Figure 4-7

4. Clip in the other side of the screen by flexing the screen and pushing it down into the other corresponding cutout hole. See Figure 4-8.

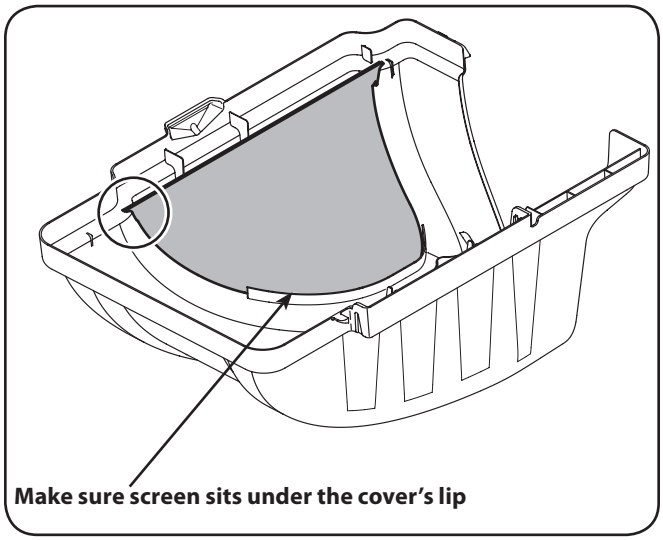

Figure 4-8

5. Install the bagger cover onto the bag support assembly, as seen in Figure 4-9. The plastic cover goes inside of the two mounting tabs.

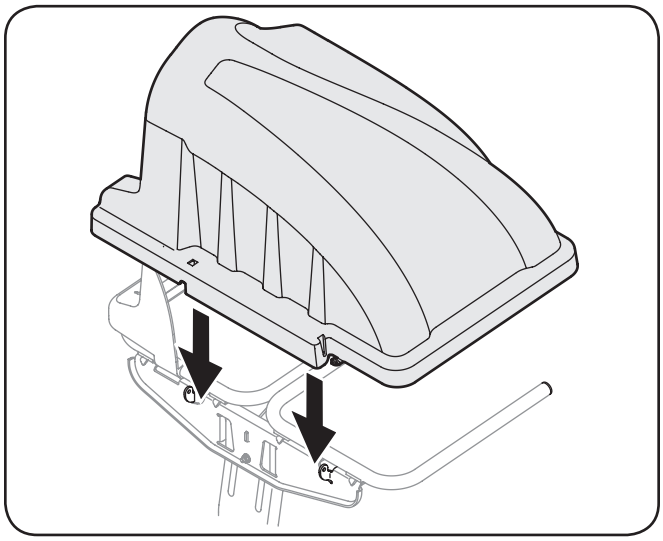

Figure 4-9

6. Slide the hinge pin into the hole located on the mounting tab, as in Figure 4-10. Use the cut-out window (See inset in Figure 4-10) to line up the hinge pin on the other side and push pin all the way in until it reaches the end-stop. At this point the pin clips into place and is secured by a tab in the bagger cover. See Figure 4-11.

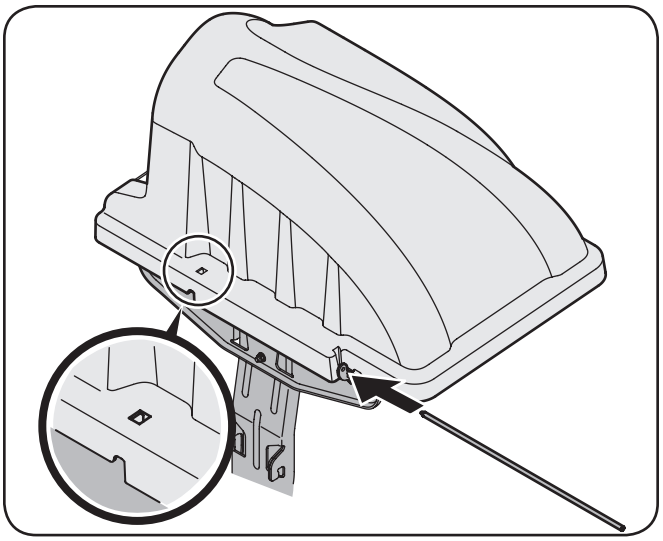

Figure 4-10

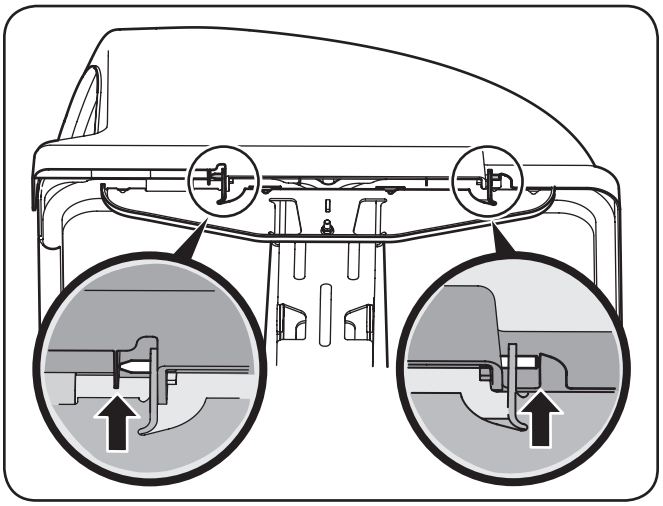

Figure 4-11

7. Open Hood by pushing in on the rear, right-side tab with your right hand, as seen in 1 of Figure 4-12, and lifting the cover with your left hand in the center rear of the bagger cover, 2.

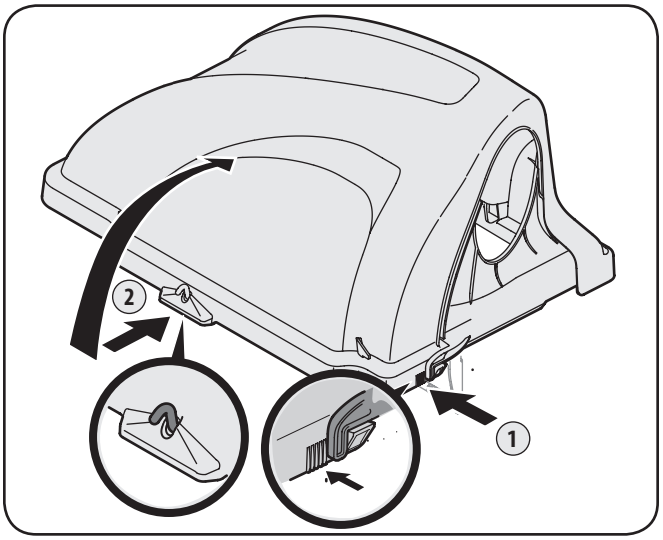

Figure 4-12

8. Install both bag assemblies onto the bag support brackets by inserting the front edge in first, as seen in 1 of Figure 4-13, and setting the back edge down until it fits into the assembly (2).

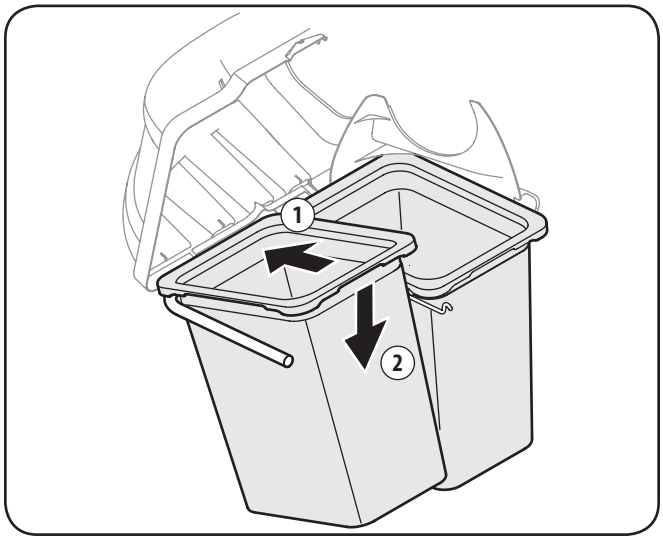

Figure 4-13

Attaching Blades

WARNING! Always protect your hands while servicing blades by wearing heavy work gloves or using heavy rags.

NOTE: Three high-lift bagging blades are included in the grass-catcher kit. Replace the blades with these new blades and save the existing blades as replacements or to reinstall on the blade spindles when not using the bagger kit.

1. Remove cutting deck from beneath the tractor following instructions for Deck Removal in operator's manual of the tractor. Gently flip the deck over to expose its underside.
2. Place a block of wood between the center deck housing baffle and the cutting blade to act as a stabilizer. See Figure 4-14.

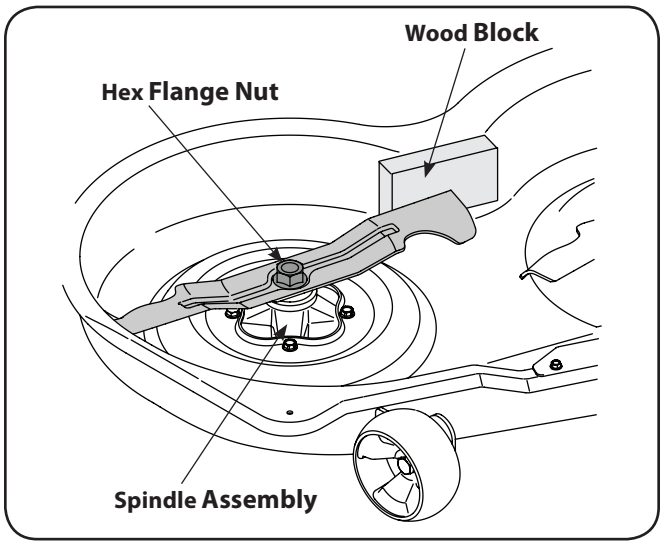

Figure 4-14

3. Use a 15/16" wrench to remove the hex flange nut that secures the blades to the blade spindle assemblies. See Figure 4-14.

WARNING: The hex flange nut has a right-handed thread pattern. Do not attempt to force the nut in wrong direction; it may damage the nut and create a safety hazard.

4. Place a new blade on each spindle so that side of the blade with part number faces the ground when the mower is in the operating position.
5. Secure with the hex flange nut removed earlier. Use a torque wrench to tighten the hex flange nut between 70 to 90 foot-pounds.
6. Move the wood block to either the left or right blade for stabilization and remove and replace the center blade so that side of the blade with part number faces the ground when the mower is in the operating position.

Installing the Deck Baffle

Note: If the deck is still flipped upside down with the blades exposed, it may be easiest to flip the deck back over to complete the following installation of the deck baffle and chute stop bracket.

1. Remove two of the self-tapping deck screws on the front right side of your deck.
2. Install the deck baffle included with the loose parts to the underside of the mowing deck using two 710-04666 hex bolts and 912-3027 flange lock nuts from hardware pack 689-00326, as shown in Figure 4-15.

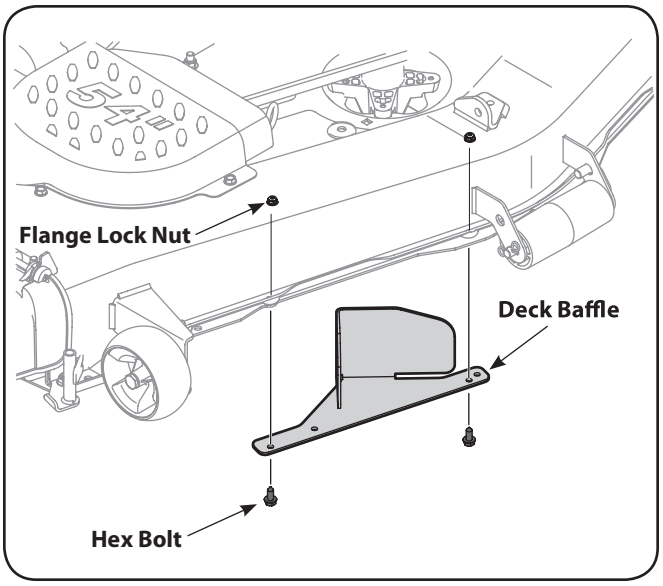

Figure 4-15

Attaching Chute Stop Bracket

1. Remove the carriage bolt and lock nut holding the chute stop to the deck. See the left Inset of Figure 4-16. Retain the carriage bolt for reinstallation.
2. Replace with new chute stop bracket, from the bagger kit, at the same position on the deck. See the right Inset of Figure 4-16. Secure with the carriage bolt previously removed, and a 712-04065 flange lock nut from hardware pack 689-00326.
   NOTE: This chute stop bracket may stay on the unit even when the bagger is not being used.

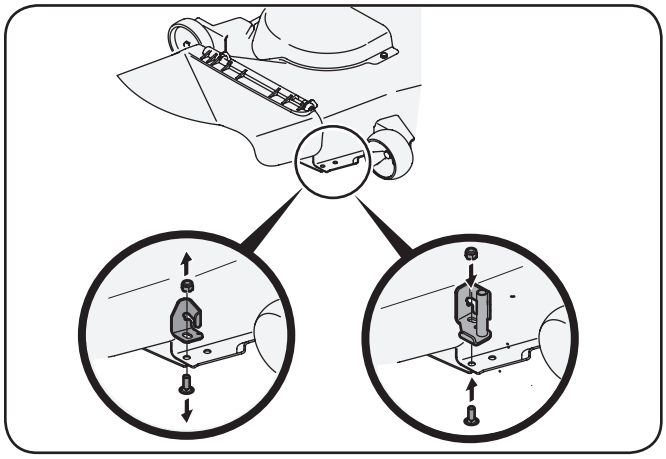

Figure 4-16

Installing the Chute Discharge Plate

1. Remove the discharge chute by removing the two flange lock nuts securing it.
2. With a hammer, lightly tap the bolts out. Discard the bolts and flange lock nuts.
3. Install the chute discharge plate to the inside of the deck opening, as seen in Figure 4-17, using two carriage bolts (710-3168) supplied in hardware pack 689-00326.
4. Replace the discharge chute and secure with two flange lock nuts (712-04065) included in the same hardware pack.
5. Securely tighten the hardware at this time.

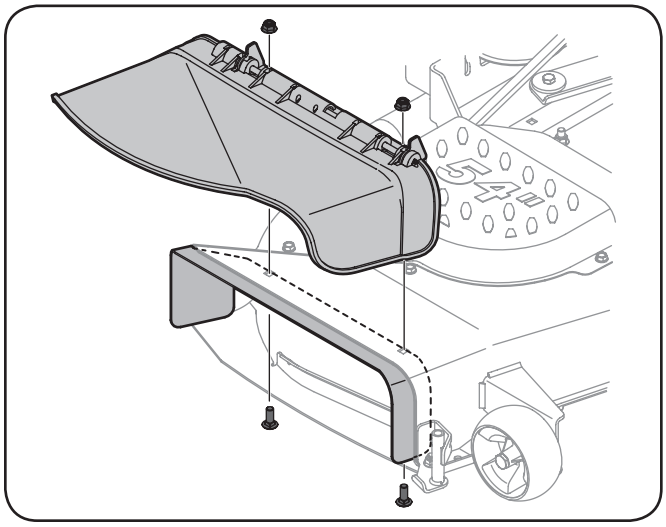

Figure 4-17

Assembling and Configuring the Discharge Chute

Before installing the discharge chute onto your tractor, a component must first be assembled onto the discharge chute elbow. The following are the instructions for assembling and configuring the discharge chute elbow.

1. Locate the discharge chute elbow and install the grass-catcher pin (911-04069) from hardware pack 689-00326 to the chute elbow in the hole provided as shown in Figure 4-18. Secure the grass-catcher pin with a flange lock nut (912-3027) from the same hardware pack.

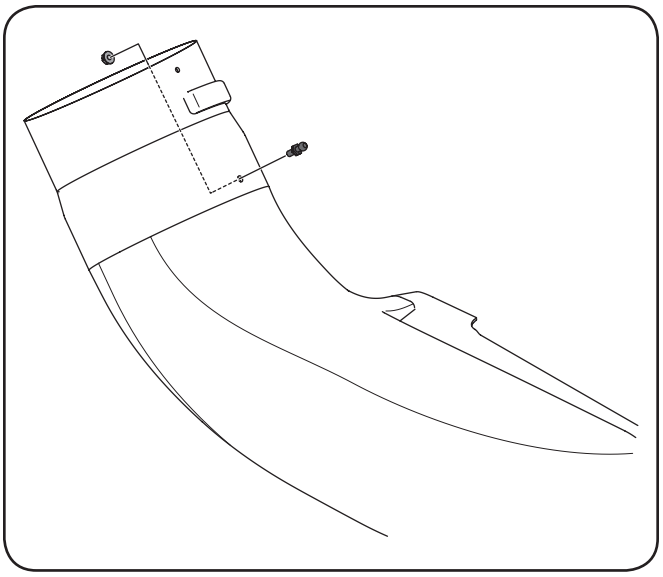

Figure 4-18

2. Attach the rubber strap (723-04008A), from hardware pack 689-00326, to the upper chute tube using the clevis pin (711-05063) from the same hardware pack. Secure with a flat washer (736-0204) and bow tie cotter pin (714-04040) supplied in the same pack, as seen in Figure 4-19.

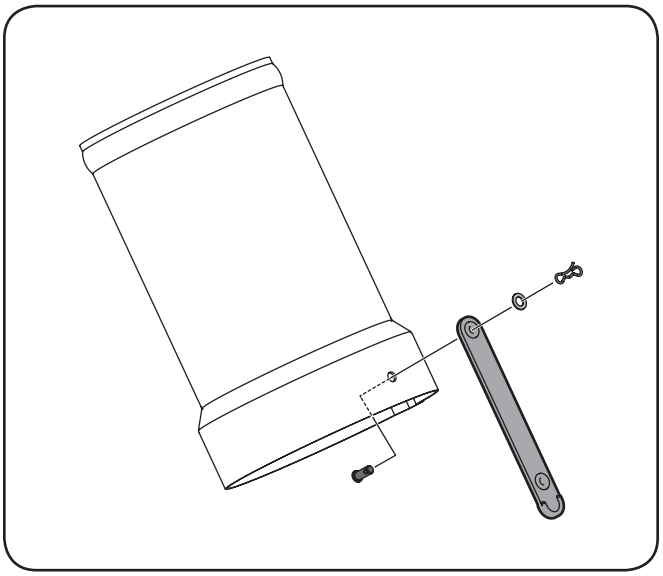

Figure 4-19

3. Peel the backing off of one of the self-adhesive foam strips (721-04388) that has been included with your grass collector. Apply it to the upper chute, flush against the flange as shown in Figure 4-20.

4. Peel the backing off of the other self-adhesive foam strip (721-04388) that has been included with your grass collector. Apply it to the bottom edge of the upper chute tube, flush against the edge as shown in Figure 4-20.

   Note: Be careful not to cover any holes on the upper chute tube when applying the self -adhesive foam strip.

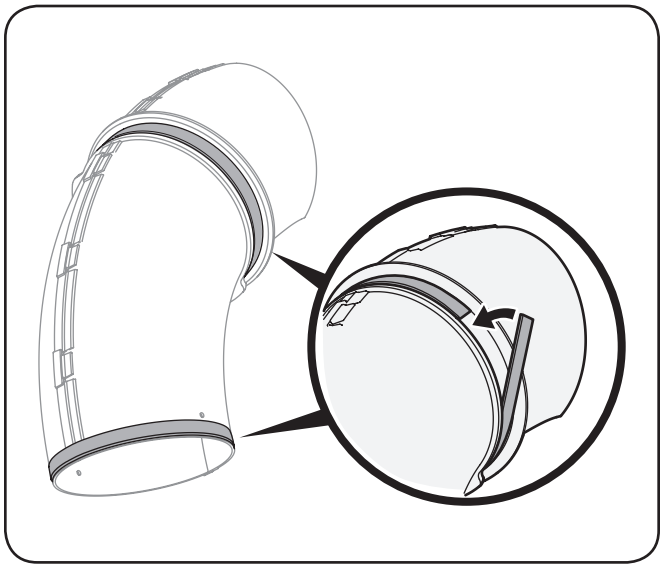

Figure 4-20

5. Apply the two wide adhesive rubber strips included with the bagger onto each chute extension tube, approximately 1.25 inches from the narrow end of the extension tube, which should be approximately a quarter inch above the bead on the narrow end of each extension tube, as shown in Figure 4-21.

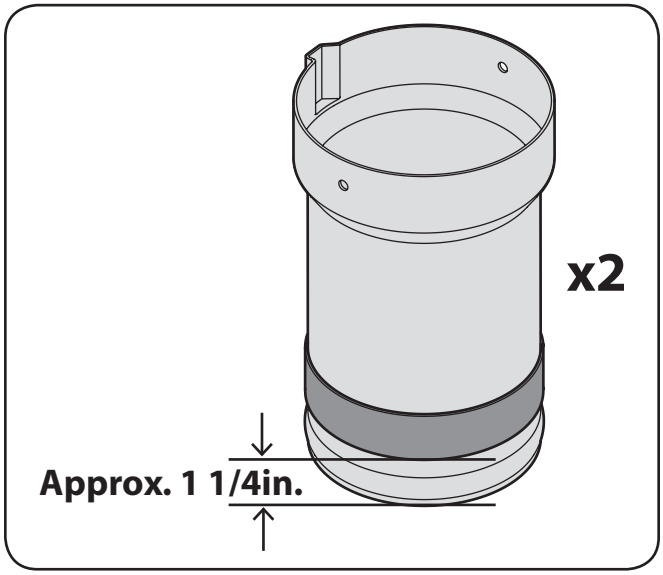

Figure 4-21

6. Install the upper chute tube into the extension tube that the rubber strap was NOT installed on. Secure the tubes together using two ratchet clips (726-3046) included in hardware pack 689-00326. See Figure 4-22.

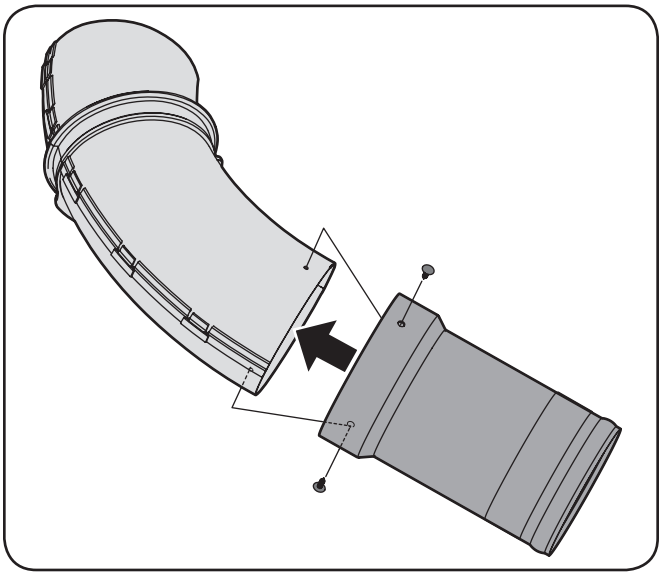

Figure 4-22

7. Install both hose clamps onto each end of the flexible hose extension as shown in Figure 4-23, positioning them over the wide adhesive rubber strips previously installed on each extension tube.

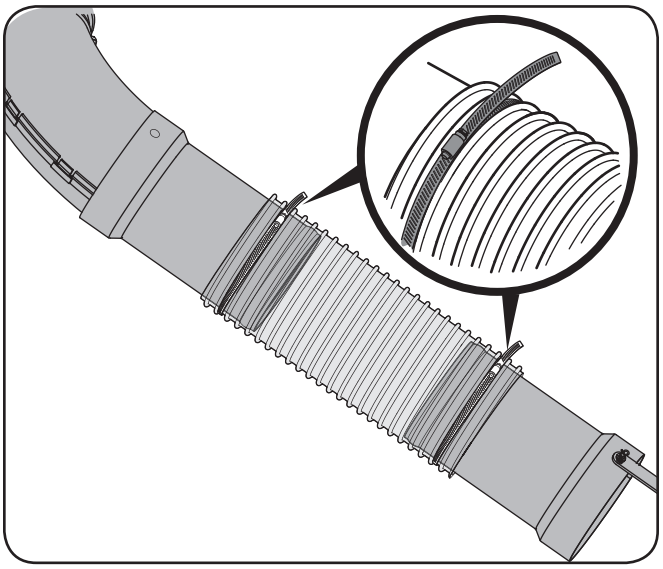

Figure 4-23

Note: Orientate the hose clamps so that they align over the two wide adhesive rubber strips previously installed and the excess from the clamps points downward as shown in the inset of Figure 4-23.

Note: It is best to only snug-fit these clamps in this phase as you will be instructed to tighten them later once the discharge chute is installed on the tractor and adjusted.

Installing the Discharge Chute

1. Reinstall cutting deck onto the tractor reversing the instructions for Deck Removal in operator's manual of the tractor.
2. Raise the deck to its highest position.
3. Raise the chute deflector (A in Figure 4-24) on the deck and hold it while you position the discharge chute over the chute opening.
4. Insert the hinge pin of the discharge chute into the tube on the chute stop bracket. See B in Figure 4-24.
5. Rotate the chute around the deck so that its front edge fits snugly into the deck opening. Lower the chute deflector slowly (C in Figure 4-24).

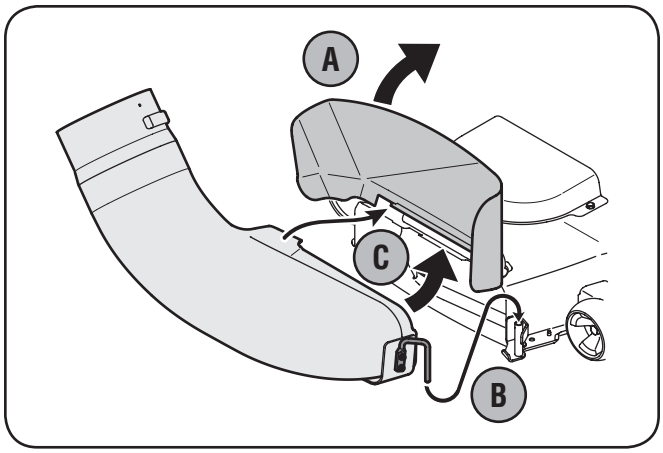

Figure 4-24

6. Attach the retainer strap on the discharge chute to the retainer clip on the deck. Refer to Figure 4-25.

Note: For the chute elbow to be properly installed, the bottom edge must fall **over** the bottom of the deck opening and the tab on top of the elbow should rest **above** the deck opening.

IMPORTANT: If the retainer clip is not present on the mowing deck, on some units, one has been included with hardware pack 689-00326. Attach the retainer hook (96606) with a self-tapping screw factory installed in the deck in the position noted in Figure 4-25. Remove the screw in the deck and reinstall with the retainer hook.

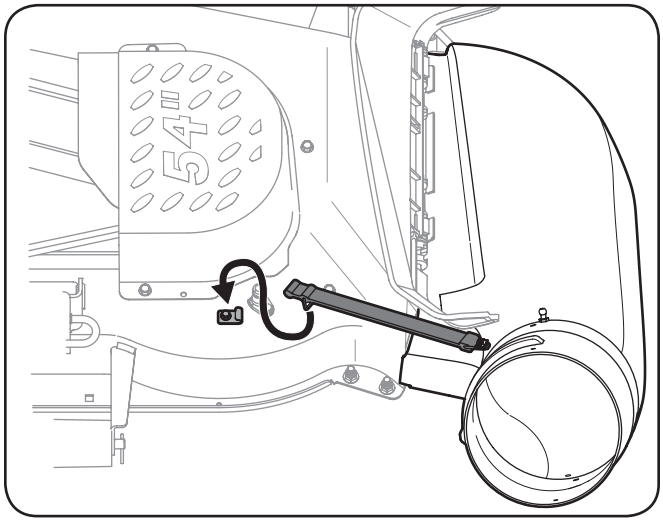

Figure 4-25

7. Install the upper chute tube onto the chute elbow by lining up the rubber strap on the upper chute tube with the pin installed on the chute elbow, as shown in Figure 4-26. Secure the upper chute tube to the chute elbow by hooking the rubber strap onto the deck pin as shown.

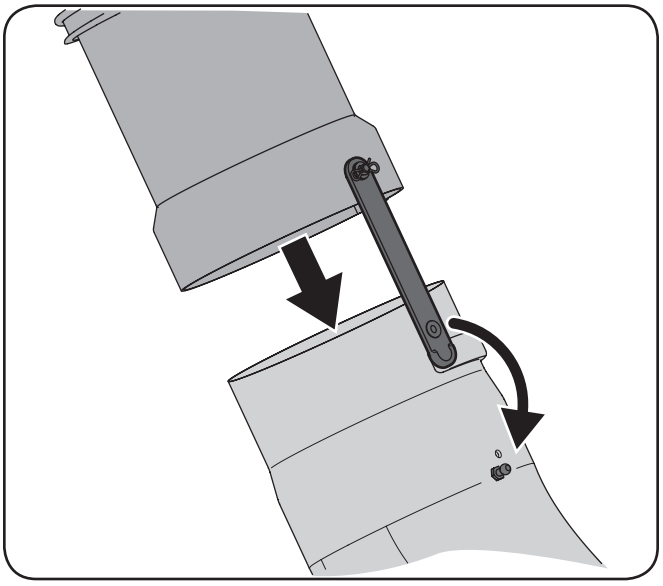

Figure 4-26

8. With the bagger cover open, pivot the upper chute tube into position so that the chute rests in the upper chute support. See Figure 4-27.

   Note: Make sure to align the upper chute with the ridges on the upper chute support.

9. Close the grass catcher cover.

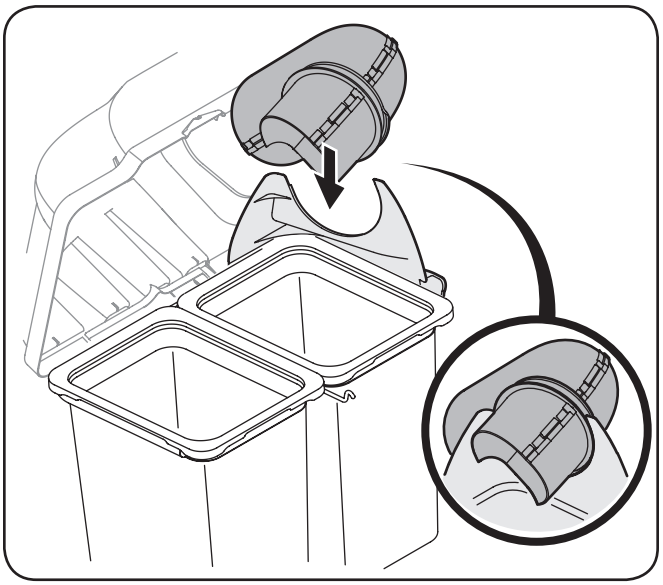

Figure 4-27

10. With the chute installed in its proper orientation and the deck set in the lowest cutting position, tighten both hose clamps on the flexible tube extension, making sure the clamps are still positioned over the rubber adhesive strips.

Install The Counter Weight

The front weight kit is designed for use with all RZT-L (Lap Bar) Residential Zero-turn models. The front weight kit is ***NOT*** designed nor required for use with all RZT-S (Steering Wheel) Residential Zero-turn models.

WARNING: This front-weight kit is required when operating any compatible lap bar RZT-L models equipped with a grass collector. Failure to install this kit may result in serious injury or death.

WARNING: Before beginning installation, place the RZT-L on a firm and level surface, set the parking brake, place the PTO in the disengaged (OFF) position, stop the motor and remove the ignition key to prevent unintended starting.

Note: The front weight kit is not utilized on the RZT-S (Steering Wheel) Residential Zero Turn units. Do not attempt to mount it on RZT-S models, as it will not fit.

RZT models are available with two different front-end styles. Identify your RZT using the images in the following instructions and follow the applicable steps.

RZT Models with a Pivoting Front Axle

Note: Having a second person assist you by holding the weight bar in place will ease in completing the following steps.

1. Insert the two 3 1⁄4-inch (710-3056) screws from hardware pack 689-00325, into the weight bar.
2. Position the weight bar onto the foot rest and secure it in place with two 3⁄8" flange nuts (712-04065) from the same hardware pack. See Figure 4-28.

   Note: To hold and retain nut for tightening, it may be necessary to insert the nut into the box end of a combination wrench and slide up through the opening in the floorboard.

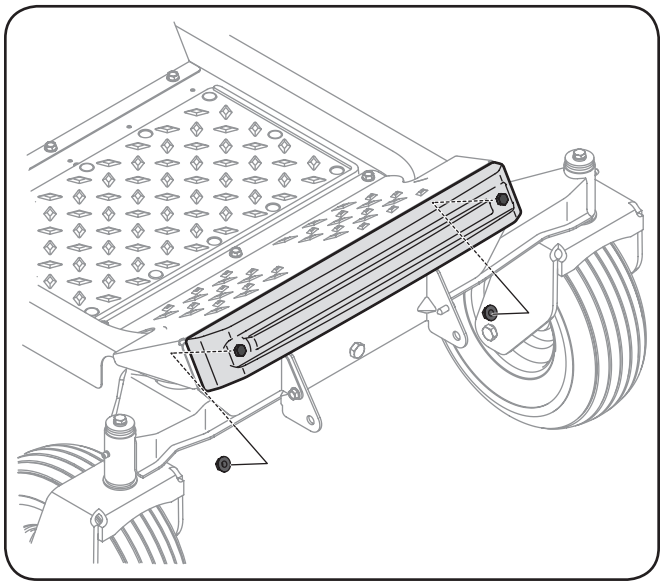

Figure 4-28

RZT Models with a Fixed Front Axle

1. Attach the left mounting bracket and the right mounting bracket to the weight bar using two 2½-inch screws (710-0859), and 3⁄8" flange nuts (712-04065) from hardware pack 689-00325. See Figure 4-29.

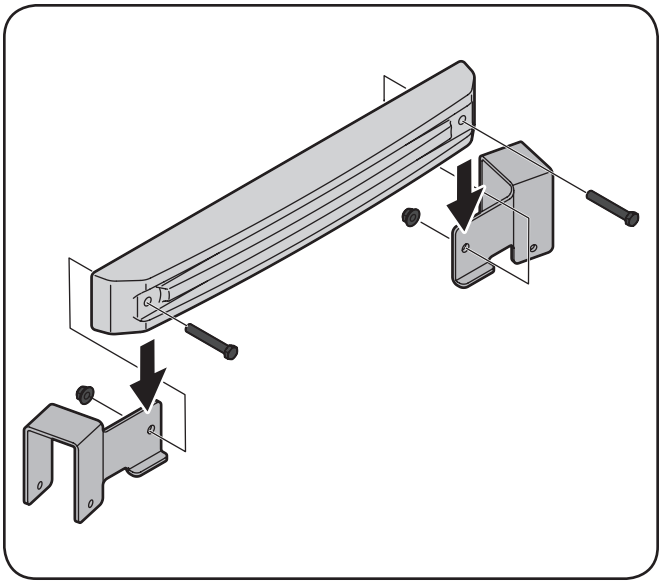

Figure 4-29

2. Attach the weight bar assembly to the front axle with a 3 1⁄4-inch (710-3056) screw and (712-04063) flange nut from hardware pack 689-00325 on the left side. Repeat on the right side. Do not fully tighten at this time. See Figure 4-30.

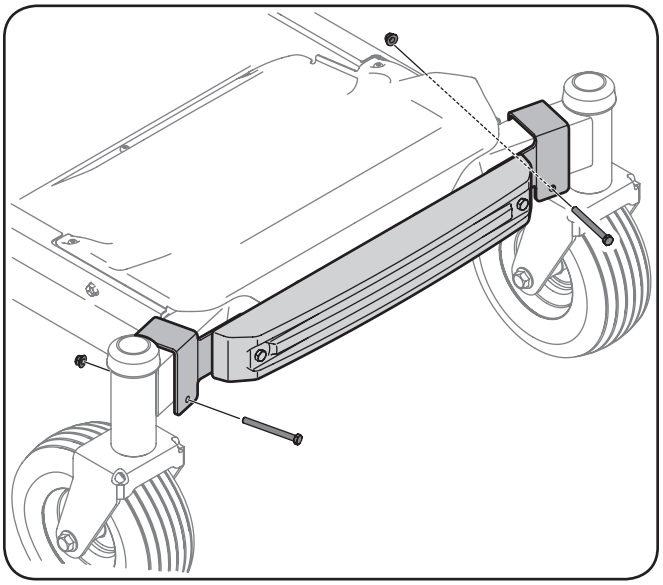

Figure 4-30

3. Visually center the weight bar assembly on the tractor and tighten the hardware installed in step 2 to secure the brackets to the front axle.

Bagger Usage

NOTE: When both grass bags are full, place the tractor on a firm, level surface, disengage the PTO, turn the tractor engine off and set the parking brake.

1. Open the grass catcher hood by pushing in on the rear, right-side tab with your right hand, as seen in 1 of Figure 5-1, and lifting the cover with your left hand in the center rear of the bagger cover, 2.

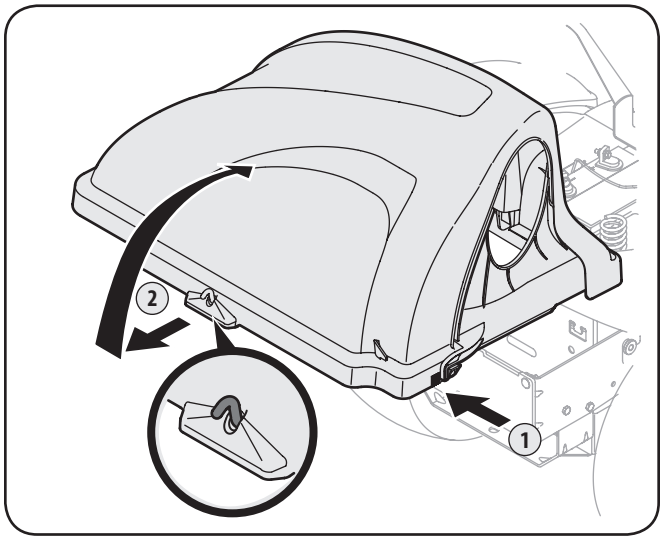

Figure 5-1

2. Do not remove the chute tube assembly from the tractor.
3. Remove the grass bags by lifting these up (1) and moving the bags away from the bag support assembly (2). See Figure 5-2.

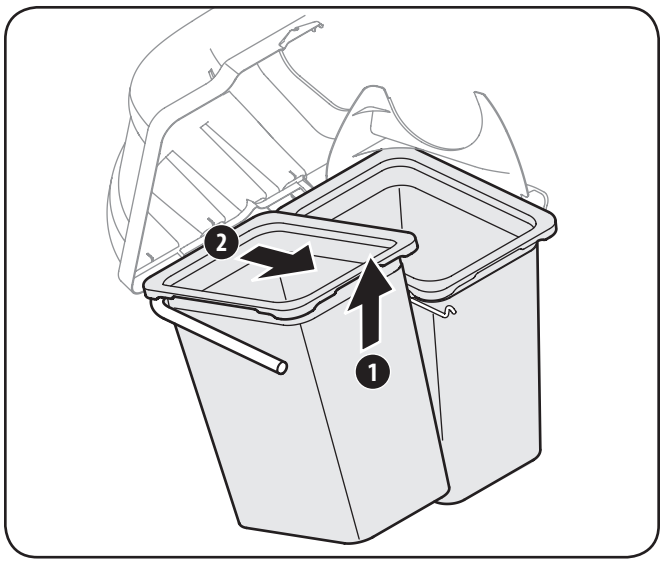

Figure 5-2

4. Empty the grass clippings at a proper disposal site, use the handle at the bottom of each grass bag. Holding the bag firmly, empty the contents
5. Replace grass bags, close lid, flip down seat, restart your tractor, release parking brake and resume cutting your grass.

This page intentionally left blank.

19A700340EM Parts List

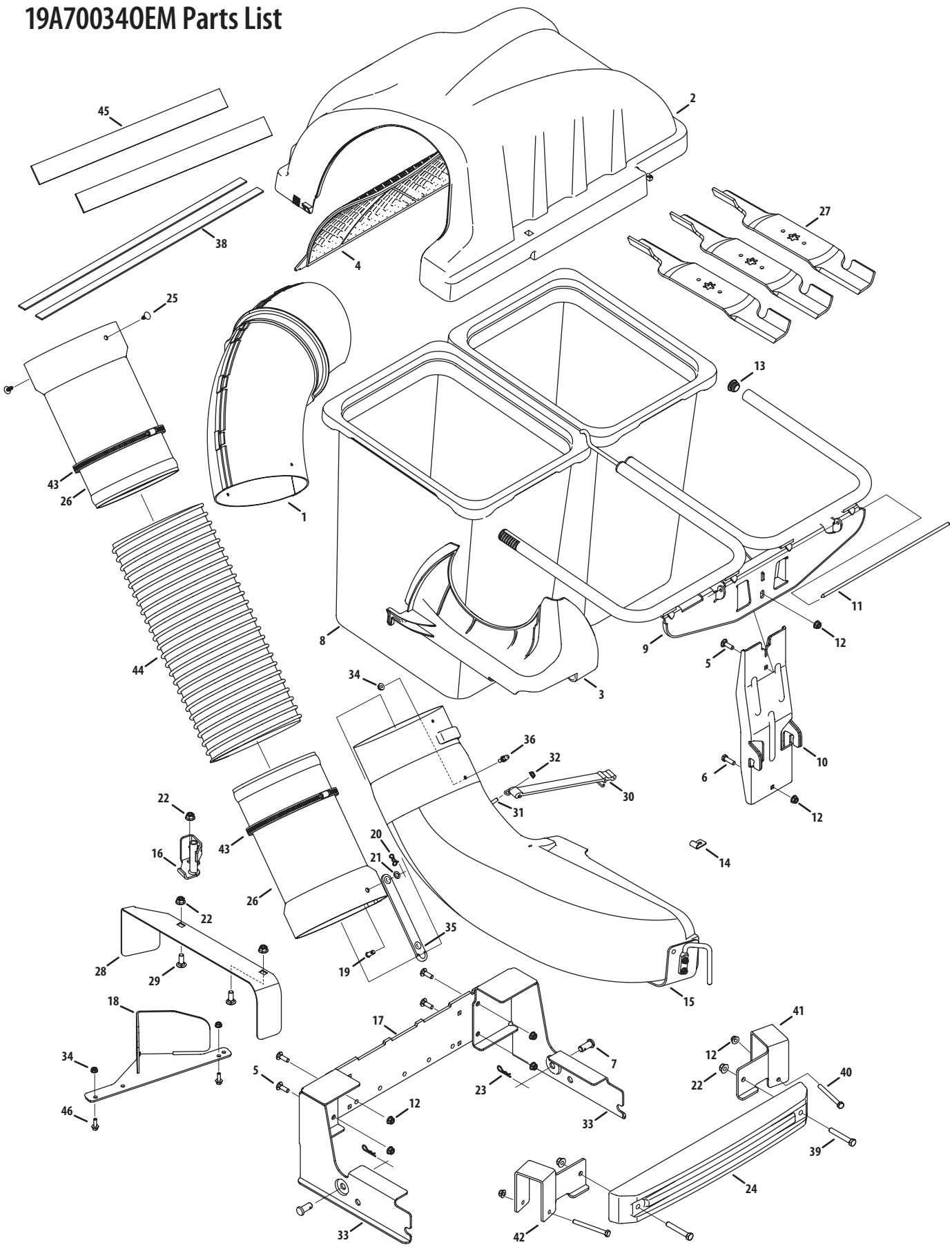

Ref.	Part Number	Description
1.	631-05071	Upper Chute Assembly
2.	631-04292	Twin Bagger Cover
3.	731-06497	Upper Chute Support
4.	731-06504	Bagger Cover Screen
5.	710-0276	Carriage Screw, 5/16-18 x 1.00”
6.	710-0376	Hex Head Screw, 5/16-18 x .75”
7.	911-0310	Clevis Pin, .50” Dia. x .78 Lg.
8.	964-04096A	Grass-bag Assembly
9.	683-04461A-0637	Twin Bag Support Assembly
10.	683-04519A-0637	Vertical Support Bracket
11.	711-04988	Cover Hinge Pin
12.	712-04063	Flange Lock Nut, 5/16-18
13.	735-0246A	End Plug
14.	96606	Retainer Hook
15.	631-04300C	Discharge Chute Elbow
16.	683-0617A-0637	Chute Stop-Bracket
17.	783-06168-0637	Universal Mounting Bracket
18.	703-06018A-0637	Deck Baffle
19.	711-05063	Clevis Pin, 5/16 x 3/4
20.	714-04040	Bow-Tie Cotter Pin
21.	736-0204	Flat Washer, .344 x .620 x .033
22.	712-04065	Flange Lock Nut, 3/8 - 16
23.	914-04023	Cotter Pin, .080 x 1.5625 Internal
24.	719-04271A	RZT Bagger Weight

Ref.	Part Number	Description
25.	726-3046	Ratchet Clip, .250
26.	731-06611	Bagger Chute Adapter, 7 In.
27.	942-0679	Blade, 18.50 Lg., High Lift
28.	783-06694-0637	Chute Discharge Plate
29.	710-3168	Carriage Bolt, 3/8-16 x 1.00
30.	723-0476	Chute Strap
31.	710-3015	Hex Head Screw, 1/4-20 x .75
32.	712-04064	Flange Lock Nut, 1/4 - 20
33.	689-00204A	RZT Mounting Assembly (Incl. Ref No. 17 & 33)
34.	912-3027	Flange Lock Nut, 1/4-20
35.	723-04008A	Chute Strap
36.	911-04069	Grass-catcher Pin
37.	710-0924	Machine Screw, 1/4-20
38.	721-04388	Adhesive Strip
39.	710-0859*	Hex Bolt, 3/8 - 16 x 2.50
40.	710-3056*	Hex Bolt, 5/16 - 18 x 2.50
41.	703-09193*	Weight Mounting Bracket, RH
42.	703-09197*	Weight Mounting Bracket, LH
43.	726-05019	Adj. Hose Clamp
44.	764-05023	Flexible Chute Extension
45.	735-05020	Wide Adhesive Rubber Strip
46.	710-04666	Hex Flange Bolt, 1/4-20x.75

** RZT-L Models Only!*

MANUFACTURER'S LIMITED WARRANTY FOR

The limited warranty set forth below is given by MTD LLC with respect to new merchandise purchased and used in the United States and/or its territories and possessions, and by MTD Products Limited with respect to new merchandise purchased and used in Canada and/or its territories and possessions (either entity respectively, "MTD").

"MTD" warrants this product (excluding its *Normal Wear Parts* and *Attachments* as described below) against defects in material and workmanship for a period of one (1) year commencing on the date of original purchase and will, at its option, repair or replace, free of charge, any part found to be defective in materials or workmanship. This limited warranty shall only apply if this product has been operated and maintained in accordance with the Operator's Manual furnished with the product, and has not been subject to misuse, abuse, commercial use, neglect, accident, improper maintenance, alteration, vandalism, theft, fire, water, or damage because of other peril or natural disaster. Damage resulting from the installation or use of any part, accessory or attachment not approved by MTD for use with the product(s) covered by this manual will void your warranty as to any resulting damage.

Normal Wear Parts are warranted to be free from defects in material and workmanship for a period of thirty (30) days from the date of purchase. Normal wear parts include, but are not limited to items such as: batteries, belts, blades, blade adapters, tines, grass bags, wheels, rider deck wheels, seats, snow thrower skid shoes, friction wheels, shave plates, auger spiral rubber and tires.

Attachments — MTD warrants attachments for this product against defects in material and workmanship for a period of one (1) year, commencing on the date of the attachment's original purchase or lease. Attachments include, but are not limited to items such as: grass collectors and mulch kits.

HOW TO OBTAIN SERVICE: Warranty service is available, WITH PROOF OF PURCHASE, through your local authorized service dealer. To locate the dealer in your area:

In the U.S.A.

Check your Yellow Pages, or contact MTD LLC at P.O. Box 361131, Cleveland, Ohio 44136-0019, or call 1-800-800-7310, 1-330-220-4683 or log on to our Web site at www.mtdproducts.com.

In Canada

Contact MTD Products Limited, Kitchener, ON N2G 4J1, or call 1-800-668-1238 or log on to our Web site at www.mtdcanada.com.

This limited warranty does **not** provide coverage in the following cases:

a. Log splitter pumps, valves, and cylinders have a separate one- year warranty.

b. Routine maintenance items such as lubricants, filters, blade sharpening, tune-ups, brake adjustments, clutch adjustments, deck adjustments, and normal deterioration of the exterior finish due to use or exposure.

c. Service completed by someone other than an authorized service dealer.

d. MTD does not extend any warranty for products sold or exported outside of the United States and/or Canada, and their respective possessions and territories, except those sold through MTD's authorized channels of export distribution.

e. Replacement parts that are not genuine MTD parts.

f. Transportation charges and service calls.

g. MTD does not warrant this product for commercial use.

No implied warranty, including any implied warranty of merchantability or fitness for a particular purpose, applies after the applicable period of express written warranty above as to the parts as identified. No other express warranty, whether written or oral, except as mentioned above, given by any person or entity, including a dealer or retailer, with respect to any product, shall bind MTD. During the period of the warranty, the exclusive remedy is repair or replacement of the product as set forth above.

The provisions as set forth in this warranty provide the sole and exclusive remedy arising from the sale. MTD shall not be liable for incidental or consequential loss or damage including, without limitation, expenses incurred for substitute or replacement lawn care services or for rental expenses to temporarily replace a warranted product.

Some states do not allow the exclusion or limitation of incidental or consequential damages, or limitations on how long an implied warranty lasts, so the above exclusions or limitations may not apply to you.

In no event shall recovery of any kind be greater than the amount of the purchase price of the product sold. **Alteration of safety features of the product shall void this warranty.** You assume the risk and liability for loss, damage, or injury to you and your property and/or to others and their property arising out of the misuse or inability to use the product.

This limited warranty shall not extend to anyone other than the original purchaser or to the person for whom it was purchased as a gift.

HOW STATE LAW RELATES TO THIS WARRANTY: This limited warranty gives you specific legal rights, and you may also have other rights which vary from state to state.

IMPORTANT: Owner may be required to present proof of purchase to obtain warranty coverage.

MTD LLC, P.O. BOX 361131 CLEVELAND, OHIO 44136-0019; Phone: 1-800-800-7310, 1-330-220-4683
MTD Canada Limited - KITCHENER, ON N2G 4J1; Phone 1-800-668-1238

GDOC-100167 REV. A