LG
Life's Good

ENGLISH

OWNER'S MANUAL
GAS RANGE

Please read this manual carefully before operating your range and retain it for future reference.

LRG3085ST	LRG3081SB	LRG3081BD
LRG3083ST	LRG3081SW	
LRG3081ST	LSRG307ST	

MFL33029619 (REV.07 150715)

www.lg.com

TABLE OF CONTENTS

3 PRODUCT FEATURES

4 IMPORTANT SAFETY INSTRUCTIONS

10 BEFORE USE

10 Accessories
11 Components

12 HOW TO USE

12 How to Use Gas Surface Burners
12 - Before Use
13 - Gas Burners
14 - Using the Gas Surface Burners
14 - Top-of-Range Cookware
15 - Using the Griddle
16 How to Use the Oven
16 - Before Use
17 - Using the Control Panel
19 Operating Instructions
19 - Convection Auto Conversion
19 - Temperature Settings
19 - Language
20 - Preheating Alarm Light
20 - Oven Light
20 - Beeper Volume
20 - Fahrenheit or Celsius
20 - Clock
21 - Timer
22 - Oven Lockout
22 Removing and Replacing the Oven Racks
22 Preheating and Pan Placement
23 Power Outage
23 Oven Moisture
23 Aluminum Foil
23 Bake
24 Broil
25 Broiling Chart
26 Cook Time (Timed Cook)
27 Start Time (Delayed Timed Cook)
27 Convection Bake
39 Convection Roast
30 Warm
30 Proof

31 CARE AND CLEANING

31 Gas Surface Burner
31 - Removing and Replacing the Gas Surface Burner
31 - Burner Heads/Caps
32 - After Cleaning the Burner Heads/Caps
32 - Burner Grates
32 - Cleaning the Burner Grates
32 Cooktop Surface
32 Stainless Steel Surfaces
33 Oven Air Vents
33 Control Panel
33 Front Manifold Panel and Knobs
33 Oven Door
34 Removing and Replacing the Oven Door and Drawer
36 Self Clean
37 - Setting Self Clean with a Delayed Start
48 EasyClean™
40 Changing the Oven Light
40 Oven Racks

41 BEFORE REQUESTING SERVICE

44 WARRANTY

44 Waranty (only USA)

*For PANAMA warranty please go to Español.

PRODUCT FEATURES

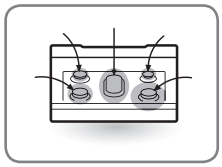

MULTIPLE GAS BURNER SIZES

Choose a burner to fit the size of your cookware.
Cooking multiple items at once is possible by using different burners at the same time.

SAFE AND CONVENIENT GAS RANGE

Provides safety and convenience for cooking.
Superboil can quickly bring a pot of water to a boil.

SELF CLEAN & EASYCLEAN™ (FOR SOME MODELS)

Good for easy cleaning.

IMPORTANT SAFETY INSTRUCTIONS

Always comply with the following precautions to avoid dangerous situations and to ensure the peak performance of your product.

WARNING

Indicates a hazardous situation which, if not avoided, could result in death or serious injury.

CAUTION

Indicates a hazardous situation which, if not avoided, could result in minor or moderate injury.

WHAT TO DO IF YOU SMELL GAS

1. Open windows.
2. **DO NOT** try to turn on any appliance.
3. **DO NOT** touch any electrical switch.
4. **DO NOT** use any phone in your building.
5. Immediately call your gas supplier from a neighbor's phone. Follow the gas supplier's instructions.
6. If you cannot reach your gas supplier, call the fire department.

ANTI-TIP DEVICE

WARNING

- **ALL RANGES CAN TIP**
- **INJURY TO PERSONS COULD RESULT**
- **INSTALL ANTI-TIP DEVICE PACKED WITH RANGE**
- **SEE INSTALLATION INSTRUCTIONS**

- **DO NOT step or sit on the door. Install the Anti-Tip Bracket packed with this range.**
  - The range could be tipped and injury might result from spilled hot liquid, food, or the range itself.
  - If the range is pulled away from the wall for cleaning, service, or any other reason, ensure that the Anti-Tip Device is properly reengaged when the range is pushed back against the wall.

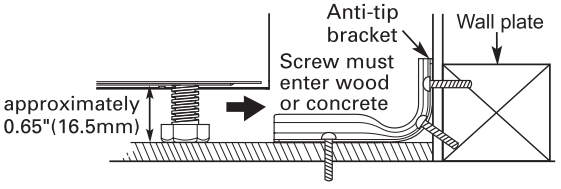

- To reduce the risk of the range tipping over, the range must be secured by properly installing the anti-tip device.
- To check that the anti-tip bracket is properly installed: Remove any items on the cooktop. Grasp the top rear edge of the range back guard and carefully attempt to tilt it forward. Verify that the anti-tip device is engaged.
- Remove the warming or storage drawers and visually inspect that the rear leveling leg is fully inserted into the anti-tip bracket.
- Refer to the installation manual for proper anti-tip bracket installation.

IMPORTANT SAFETY NOTICE

Enforcement Act requires the Governor of California to publish a list of substances known to the state to cause birth defects or other reproductive harm, and requires businesses to warn customers of potential exposure to such substances.
Gas appliances can cause minor exposure to four of these substances, namely benzene, carbon monoxide, formaldehyde and soot, caused primarily by the imperfect combustion of natural or LP gas.
Correctly adjusted burners, indicated by a bluish rather than a yellow flame, will minimize imperfect combustion. Exposure to these substances can be minimized by opening windows or using a ventilation fan or hood.

SAFETY PRECAUTIONS

Have the installer show you the location of the range gas shut-off valve and how to shut it off if necessary.

- Make sure your range is properly installed and grounded by a qualified installer, according to the installation instructions. Any adjustment and service should be performed only by qualified gas range installers or service technicians.
- Plug your range into a 120-volt grounded outlet only. Do not remove the round grounding prong from the plug. If in doubt about the grounding of the home electrical system, it is your personal responsibility and obligation to have an ungrounded outlet replaced with a properly grounded, three-prong outlet in accordance with the National Electrical Code. Do not use an extension cord with this range.
- **DO NOT** use an adapter plug, an extension cord, or remove the grounding prong from the electrical power cord to prevent fire hazard or electrical shock. Failure to follow this warning can cause serious injury, fire or death.
- To prevent poor air circulation, place the range out of kitchen traffic path and out of drafty locations.
- **DO NOT** attempt to repair or replace any part of your range unless it is specifically mentioned in this manual. All other services should be referred to a qualified technician.
- Make sure that all packaging materials are removed from the range before operating it to prevent fire or smoke damage should the packaging material ignite.
- Make sure your range is properly adjusted by a qualified service technician or installer for the type of gas (natural or LP) that is to be used. Your range can be converted for use with either type of gas. See the installation instructions.

⚠ CAUTION

Wear gloves when cleaning the range to avoid injury or burn.

⚠ WARNING

These adjustments must be done by a qualified service technician according to the manufacturer's instructions and all codes and requirements of the authority having jurisdiction. Failure to follow these instructions could result in serious injury or property damage. The qualified agency performing these adjustments assumes responsibility for the conversion.

- In an emergency situation or if you want to shut off the gas supply, remove the packing rubber from the regulator on the back side of the range, and then close the regulator's valve by positioning the lever as shown in the figure below.

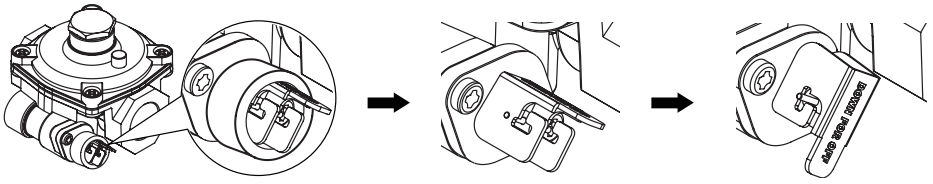

Lever's open position | Lever's open position (without packing lever) | Lever's closed position

- After using your range for a long time, high floor temperatures may result and many floor coverings will not withstand this kind of use.
- **NEVER** install the range over vinyl tile or linoleum that cannot withstand such type of use. Never install it directly over interior kitchen carpeting.

⚠ CAUTION

Items of interest to children should not be placed in cabinets above a range or on the backsplash of a range—children climbing on the range to reach items could be seriously injured.

- **DO NOT** leave children alone or unattended where a range is hot or in operation. They could be seriously burned.
- **DO NOT** let anyone climb, stand or hang on the oven door, warming drawer or cooktop. They could damage the range and even tip it over, causing severe personal injury.
- Wear gloves when cleaning the range to avoid injury or burn.

WARNING

- This product contains chemicals known to the State of California to cause cancer. **Wash hands after handling.**

WARNING

- **NEVER** use your range as a space heater to heat or warm the room. Doing so may result in carbon monoxide poisoning and overheating of the oven.
- **NEVER** wear loose fitting or hanging garments while using the appliance. Be careful when reaching for items placed in cabinets over the range. Flammable materials could be ignited if brought in contact with flame or hot oven surfaces and may cause severe burns.
- **DO NOT** place flammable materials in the oven or near the cooktop.
- **DO NOT** place or use combustible materials such as gasoline or other flammable vapors and liquids in the vicinity of this or any other appliance.
- **DO NOT** allow cooking grease or other flammable materials in or near the range.
- Maintenance – Keep range area clear and free from combustible materials, gasoline, and other flammable vapors and liquids.
- **DO NOT** use water on grease fires. Never touch a flaming pan. Turn the controls off. Smother a flaming pan on a surface burner by covering the pan completely with a well-fitting lid, cookie sheet or flat tray. Use a multi-purpose dry chemical or foam-type fire extinguisher.
- A grease fire can be put out by covering it with baking soda or, if available, by using a multi-purpose dry chemical or foam-type fire extinguisher.
- Flame in the upper oven or lower oven can be smothered completely by closing the oven door and turning the control to off or by using a multi-purpose dry chemical or foam-type fire extinguisher.
- **DO NOT** use the oven or the drawer for storage.
- Let the burner grates and other surfaces cool before touching them.
- **NEVER** block the vents (air holes) of the range. They provide the air inlet and outlet that are necessary for the range to operate properly with correct combustion. Air openings are located at the rear of the cooktop, at the top and bottom of the oven door, and at the bottom of the range.
- **NEVER** cover any slots, holes or passages in the oven bottom or cover an entire rack with materials such as aluminum foil. Doing so blocks air flow through the oven and may cause carbon monoxide poisoning. Aluminum foil linings may also trap heat, causing a fire hazard.
- **NEVER** obstruct the flow of air for combustion and ventilation by blocking the oven vent or air intakes. Doing so restricts air to the burner and may result in carbon monoxide poisoning.
- Large scratches or impacts to glass doors can lead to broken or shattered glass.
- Stepping, leaning or sitting on the doors or drawers of this range can result in serious injuries and also cause damage to the range. Do not allow children to climb or play around the range. The weight of a child on an open door may cause the range to tip, resulting in serious burns or other injury.
- Gas leaks may occur in the system and result in a dangerous situation. Gas leaks may not be detected by smell alone. Gas suppliers recommend you to purchase and install a UL approved gas detector. Install and use in accordance with the gas detector manufacturer's instructions.
- Leak testing of the appliance shall be conducted according to the manufacturer's instructions.
- **DO NOT** use commercial oven cleaners on the oven finish or around any part of the oven. They will damage the finish of parts.
- To prevent staining or discoloration, clean the appliance after each use.
- **DO NOT** attempt to open or close the door or operate the oven until the door is properly installed.
- **NEVER** place fingers between the hinge and front oven frame. Hinge arms are spring mounted. If accidentally hit, the hinge will slam shut against the oven frame and could injure your fingers.

CAUTION

- **DO NOT** use the oven for storing food or cookware.
- To prevent damage to the oven door, do not attempt to open the door when Lock is displayed.
- **DO NOT** place excessive weight on or stand on an open door. This could cause the range to tip over, break the door, or injure the user.
- **DO NOT** use delayed baking for highly perishable foods such as dairy products, pork, poultry, or seafood.

WARNING

- Disconnect the electrical supply before servicing the appliance.
- **NEVER** use the appliance door as a step stool or seat, as this may result in tipping of the appliance and serious injuries.
- This product should not be installed below ventilation type hood systems that direct air in a downward direction.
  Doing so may cause ignition and combustion problems with the gas burners resulting in personal injury and may affect the cooking performance of the unit.

SURFACE BURNERS

WARNING

- Even if the top burner flame goes out, gas is still flowing to the burner until the knob is turned to the "OFF" position. If you smell gas, immediately open a window and ventilate the area for five minutes prior to using the burner. Do not leave the burners turned "ON" while unattended.
- **Use proper pan size - DO NOT** use pans that are unstable or that can be easily tipped. Select cookware with flat bottoms large enough to cover burner grates. To avoid spillovers, make sure the cookware is large enough to contain the food properly. This will both save cleaning time and prevent hazardous accumulations of food, since heavy spattering or spillovers left on the range can ignite. Use pans with handles that can be easily grasped and remain cool.

CAUTION

- Be sure that all surface controls are set in the "OFF" position prior to supplying gas to the range.
- **NEVER** leave the surface burners unattended at high flame settings. Boilovers may cause smoke and greasy spillovers that may catch on fire.
- Always turn the knobs to the "LITE" position when igniting the top burners and make sure the burners have ignited.
- Control the top burner flame size so it does not extend beyond the edge of the cookware. Excessive flame is hazardous.
- Only use dry pot holders—moist or damp pot holders on hot surfaces may result in burns from steam. Do not let pot holders come near open flames when lifting cookware. Do not use towels or other bulky cloth items. Use a pot holder.
- Using glass cookware—make sure the cookware is designed for top-of-range cooking.
- To prevent burns from ignition of flammable materials and spillage, turn cookware handles toward the side or back of the range without extending over adjacent burners.
- **NEVER** leave any items on the cooktop. The hot air from the vent may ignite flammable items and will increase pressure in closed containers, which may cause them to burst.
- Carefully watch foods being fried at a high flame setting.
- Always heat fat slowly, and watch as it heats.
- If frying combinations of oils and fats, stir them together before heating.
- Use a deep fat thermometer if possible to prevent overheating fat beyond the smoking point.
- Use the least possible amount of fat for effective shallow or deep-fat frying. Filling the pan with too much fat can cause spillovers when food is added.
- **DO NOT** cook foods directly on an open flame on the cooktop.
- **DO NOT** use a wok on the surface burners if the wok has a round metal ring that is placed over the burner grate to support the wok. This ring acts as a heat trap, which may damage the burner grate and burner head. It may also cause the burner to work improperly. This may cause carbon monoxide levels which are higher than what is allowed by current standards, resulting in a health hazard.
- Foods for frying should be as dry as possible. Frost or moisture on foods can cause hot fat to bubble up and spill over the sides of the pan.
- **NEVER** try to move a pan of hot fat, especially a deep fat fryer. Wait until the fat is cool.
- **DO NOT** place plastic items on the cooktop—they may melt if left too close to the vent.
- Keep all plastics away from the surface burners.
- To prevent burns, always be sure that the controls for all burners are in the "OFF" position and all grates are cool before attempting to remove them.
- If you smell gas, turn off the gas to the range and call a qualified service technician. Never use an open flame to locate a leak.
- Always turn the knobs to the "OFF" position before removing cookware.
- **DO NOT** lift the cooktop. Lifting the cooktop can cause damage and improper operation of the range.
- If the range is located near a window, do not hang long curtains that could blow over the surface burners and catch on fire.
- Use care when cleaning the cooktop. The pointed metal ends on the electrodes could cause injury.

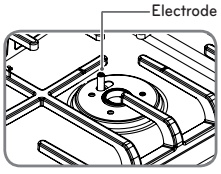

BROILER

Always use a broiler pan and a grid for excess fat and grease drainage. This will help to reduce splatter, smoke, and flare-ups. The igniter for the broil burner on the ceiling of the oven will glow orange periodically during normal broil operation.

⚠ WARNING

When using your broiler, the temperature inside the oven will be extremely high. Take care to avoid possible burns by:
• Keeping the door closed when broiling (refer to Broil section of the manual)
• Always wear oven mitts when inserting or removing food items

COOK MEAT AND POULTRY THOROUGHLY

To protect against food borne illnesses, cook meat and poultry thoroughly. The USDA has indicated the following as safe minimum internal temperatures for consumption:

- Ground beef, veal, pork, or lamb: 160 °F
- Poultry: 165 °F
- Beef, veal, pork, or lamb: 145 °F
- Fish/seafood: 145°F

SELF CLEANING OVEN

Make sure to wipe off excess spillage before operating the self clean function.

⚠ CAUTION

- **DO NOT** leave food, cooking utensils, racks, etc. in the oven during the self clean cycle.
- **DO NOT** use oven cleaners. No commercial oven cleaner or oven liner protective coating of any kind should be used in or around any part of the oven. Residue from oven cleaners will damage the inside of the oven when the self clean cycle is used.
- Remove oven racks and other items from both upper and lower ovens before starting the self clean cycle.
- Only clean the parts listed in this manual.
- **DO NOT** clean the door gasket. The door gasket is necessary for a good seal. Care should be taken not to rub, damage or move the gasket.
- If the self cleaning mode malfunctions, turn the range off and disconnect the power supply. Have the range serviced by a qualified technician.
- It is normal for parts of the oven to become hot during a self clean cycle.
- Avoid touching the door, window or oven vent area during a clean cycle.

OVEN

When opening the door of a hot oven, stand away from the range. The hot air and steam that escape can cause burns to hands, face and eyes.

⚠ WARNING

NEVER block any slots, holes or passages in the oven bottom or cover an entire rack with materials such as aluminum foil. Doing so blocks air flow through the oven and may cause carbon monoxide poisoning. Aluminum foil linings may also trap heat, causing a fire hazard.

- **DO NOT** heat food in closed containers. Pressure inside the container could increase and burst, causing an injury.
- **DO NOT** use aluminum foil anywhere in the oven except as described in this manual. Doing so could create a fire hazard or cause damage to the range.
- **DO NOT** use the oven for storage. Items stored in the oven can catch on fire.
- Keep the oven free from grease buildup.
- Insert the oven racks in the desired position while the oven is cool.
- To prevent burns when removing food, slide racks out until the stop engages, then remove food items. This may also help you avoid burns from touching hot surfaces of the door or oven walls.
- When placing or removing a griddle, always wear oven mitts.
- When using cooking or roasting bags in the oven, follow the manufacturer's directions.
- Use only glass cookware that is recommended for use in gas ovens.
- Always remove the broiler pan from the range after you finish broiling. Grease left in the pan can catch fire if the oven is used without removing the grease from the broiler pan.
- If meat is too close to the flame while broiling, the fat may ignite. Trim excess fat to prevent excessive flare-ups.
- Make sure the broiler pan is in place correctly to minimize the possibility of grease fires.
- If you should have a grease fire in the broiler pan, press the "CLEAR OFF" button, and keep the oven door closed to contain the fire until it burns out.
- For safety and better cooking performance, always bake and broil with the oven door closed. Open door baking or broiling can cause damage to the knobs or valves. **DO NOT** leave the oven door open during cooking or cool down.

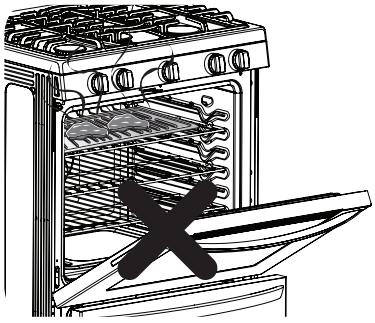

READ ALL INSTRUCTIONS BEFORE USING THE APPLIANCE.

SAVE THESE INSTRUCTIONS

BEFORE USE

Accessories

Make sure that all parts are included after purchasing this product.

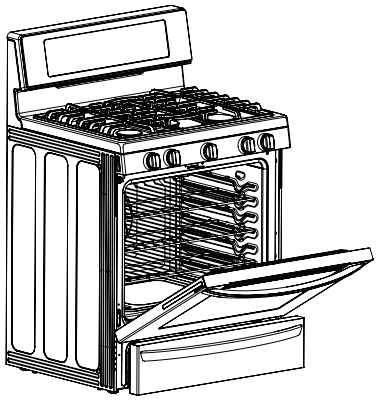

Gas Oven Range
(LRG3085)

Standard rack (1ea)

Only for LRG3035 / LSRG307

Griddle (1ea)

Only for LRG3085/LRG3083/LSRG307

Owner's manual (1ea)

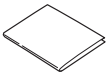

Installation manual (1ea)

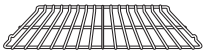

Standard racks (2ea)

Common Accessory

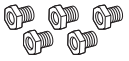

Cooktop nozzles (5ea)

Oven nozzles (2ea)

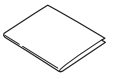

Installation guide (1ea)

LP nozzle conversion kit

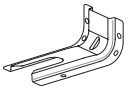

Anti-tip (1ea)

Screws (4ea)

Anchors (4ea)

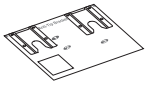

Template (1ea)

Anti-tip kit

Spray bottle (1ea)

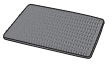

Non-scratch
Scouring Pad (1ea)

For Model: LRG3085 / LRG3083 / LRG3081 / LSRG307

NOTE

- Contact LG Customer Service at 1-800-243-0000 (U.S.) if any accessories are missing
  For Panama Customer Service call at 507-260-0000.
- For your safety and extended product life, only use authorized components.
- The manufacturer is not responsible for product malfunction or accidents caused by the use of separately purchased, unauthorized components or parts.
- The images in this guide may be different from the actual components and accessories, and are subject to change by the manufacturer without prior notice for product improvement purposes.

Components

Make sure to understand the names and function of each part.
* Throughout this manual, the features and appearance may vary depending on your model.

For model: LRG3085 / LSRG307

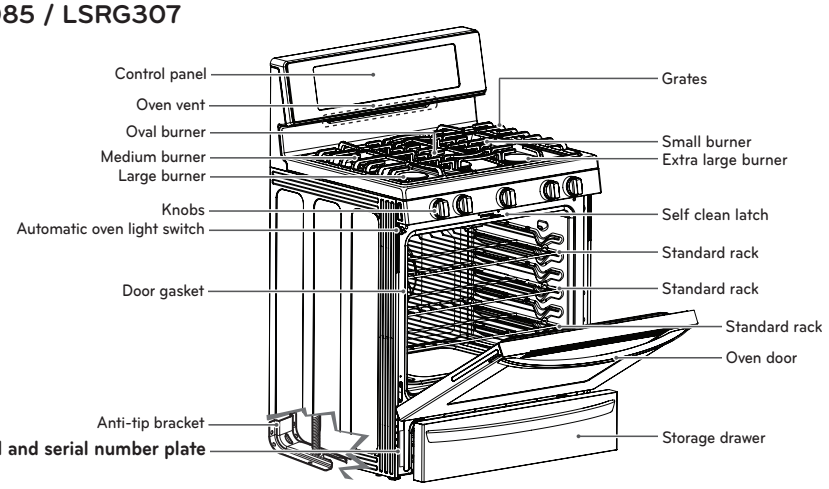

For model: LRG3083

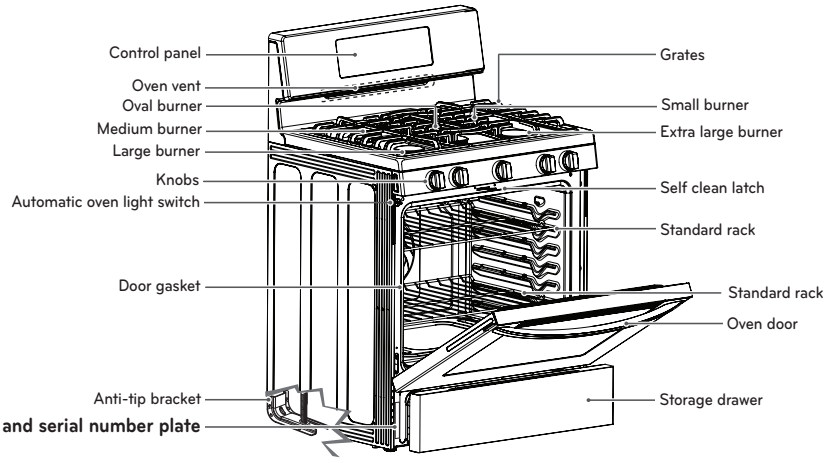

For model: LRG3081 / LRG3091

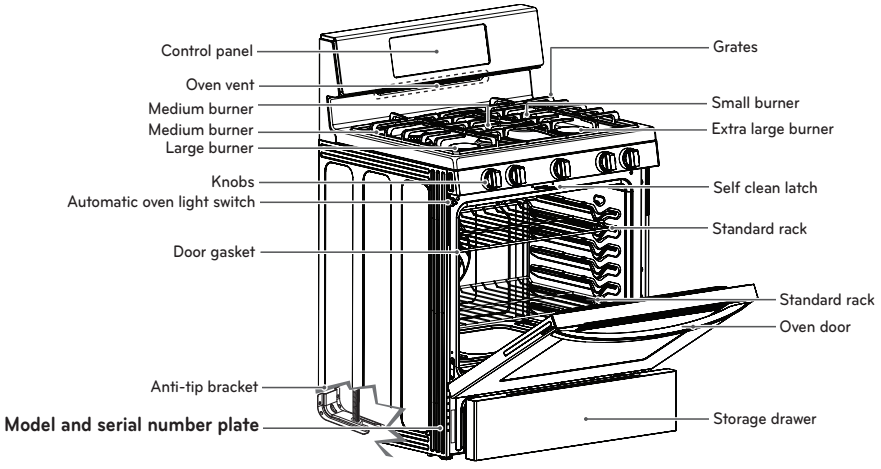

HOW TO USE

How to Use Gas Surface Burners

Before Use

Read all instructions before using.

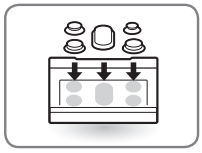

Make sure that all burners are properly placed.

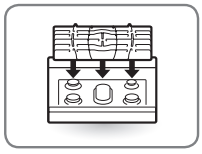

Make sure that all grates are properly placed before using the burner.

CAUTION

DO NOT operate the burner for an extended period of time without cookware on the grate. The finish on the grate may chip without cookware to absorb the heat.

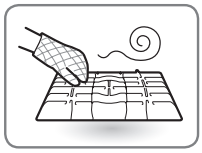

Make sure that the burners and grates are cooled down before touching them and also before placing any other object like a pot holder or a cleaning cloth, etc on them.

Touching grates before they cool down may cause burns.

CAUTION

WHAT TO DO IF YOU SMELL GAS

1. Open windows.
2. **DO NOT** try to light any appliance.
3. **DO NOT** touch any electrical switch.
4. **DO NOT** use any phone in your building.
5. Immediately call your gas supplier from a neighbor's phone.
   Follow the gas supplier's instructions.
6. If you cannot reach your gas supplier, call the fire department.

NOTE

Electric spark igniters from the burners cause the clicking noise. All the spark igniters on the cooktop will activate when igniting just one burner.

The flames on the surface burners may burn yellow in the presence of high humidity, such as a rainy day or a nearby humidifier.

Gas Burners

Your gas range cooktop has five or four sealed gas burners. These can be assembled and separated. Follow the guide below.

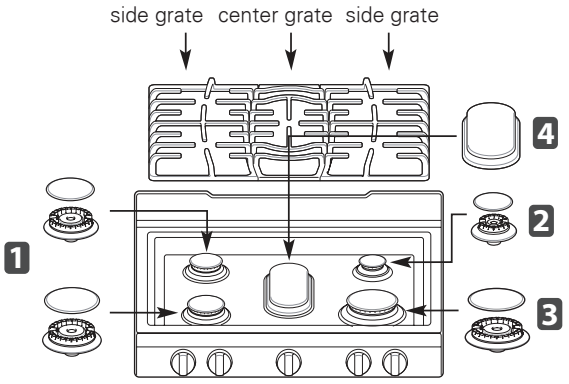

LRG3085/LRG3083/LSRG307

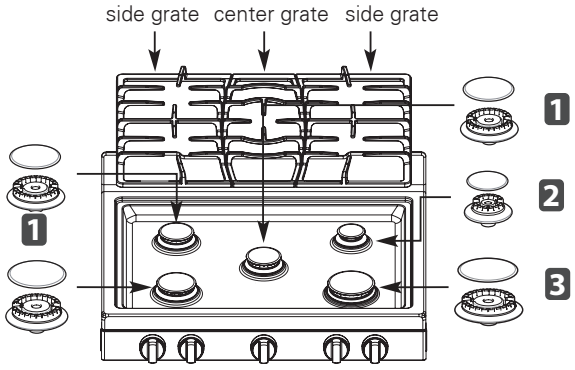

LRG3081 / LRG3091

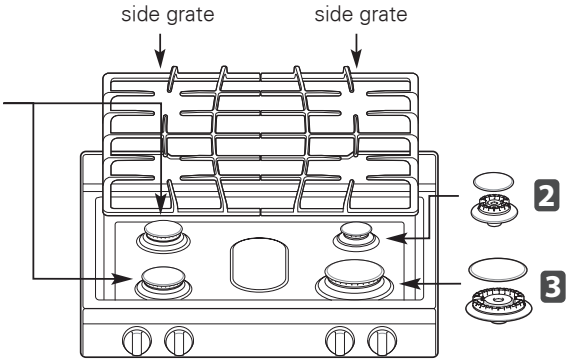

LRG3021

1 Medium and Large burner

The medium and large burners are the primary burners for most cooking. These general purpose burners can be turned down from “HI” to “LO” to suit a wide range of cooking needs.

2 Small burner

The smallest burner is used for delicate foods such as sauces or foods that require low heat for a long cooking time.

3 Extra large burner

The extra large burner is the maximum output burner. Like the other four burners, it can be turned down from “HI” to “LO” for a wide range of cooking applications. This burner is also designed to quickly bring large amounts of liquid to a boil. It can be used with cookware 10 inches or larger in diameter.

4 Oval burner

The oval burner (center) is for use with a griddle or oval pots.

Using the Gas Surface Burners

1 Be sure that all of the surface burners are placed in the correct positions.

2 Put the cookware on the burner. (Example: pot, frying pan, etc.)

3 Push and turn the control knob to the "**LITE**" position.

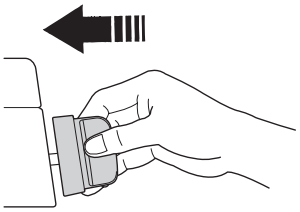

You will hear a clicking noise from the electric spark ignition system.

4 Turn the control knob to control the flame size.

CAUTION

DO NOT attempt to disassemble or clean around any burner while another burner is on. When turning a burner to "**LITE**", all the burners spark. An electric shock may result, which could cause you to knock over hot cookware.

Selecting the Flame Size

Watch the flame, not the knob, as you reduce heat. When fast heating is desired, the flame size on a gas burner should match the cookware that you are using.

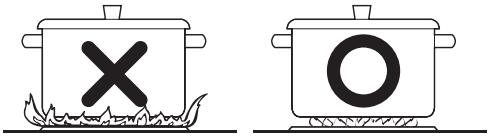

CAUTION

NEVER let the flames extend up the sides of the cookware.

NOTE

After LP gas conversion, flames can be bigger than normal when you put a pot on the surface burner

In Case of Power Failure

In case of a power failure, you can light the gas surface burners on your range with a match.
Surface burners in use when an electrical power failure occurs will continue to operate normally.

1 Hold a lit match to the burner, then push in the control knob.

2 Turn the control knob to the "**Lo**" position.

CAUTION

Use extreme caution when lighting burners with a match. Doing so can cause burns and damage.

Top-of-Range Cookware

Aluminum	Medium-weight cookware is recommended because it heats quickly and evenly. Most foods brown evenly in an aluminum skillet. Use saucepans with tight fitting lids when cooking with minimum amounts of water.
Cast-Iron	If heated slowly, most skillets will give satisfactory results.
Stainless Steel	This metal alone has poor heating properties and is usually combined with copper, aluminum or other metals for improved heat distribution. Combination metal skillets work satisfactorily if they are used with medium heat as the manufacturer recommends.
Enamelware	Under some conditions, the enamel of this cookware may melt. Follow cookware manufacturer's recommendations for cooking methods.
Glass	There are two types of glass cookware - those for oven use only and those for top-of-range cooking.
Heatproof Glass Ceramic	Can be used for either surface or oven cooking. It conducts heat very slowly and cools very slowly. Check cookware manufacturer's directions to be sure it can be used on gas ranges.

Using a Wok:

If using a wok, it is recommended that you use a 14-inch or smaller flat-bottomed wok. Make sure that the wok bottom sits flat on the grate.

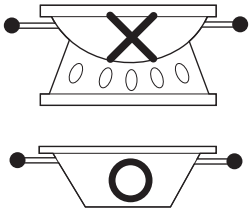

Use a flat-bottomed wok.

CAUTION

DO NOT use a wok support ring. Placing the ring over the burner or grate may cause the burner to work improperly, resulting in carbon monoxide levels above allowable standards. This can be hazardous to your health.

Using Stove-top Grills:

Do not place stove-top grills on the burner.

CAUTION

DO NOT use stove top grills on your surface burners. Using a stove top grill on the surface burner will cause incomplete combustion and can result in exposure to carbon monoxide levels above allowable current standards. This can be hazardous to your health.

Using the Griddle

For model: LRG3085/LRG3083/LSRG307

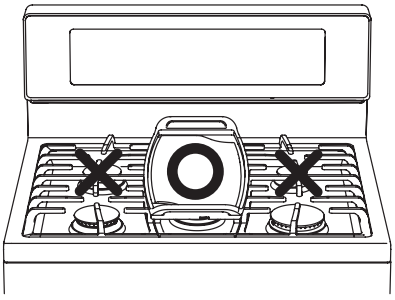

Your non-stick coated griddle provides an extra-large cooking surface for meats, pancakes or other food usually prepared in a frying pan or skillet.

NOTE

- It is normal for the griddle to become discolored over time.

How to Place the Griddle: The griddle can only be used with the center burner. The griddle must be properly placed on the center grate, as shown in the below illustration.

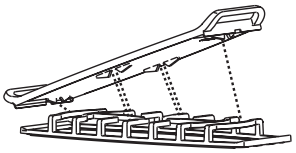

NOTE

- **DO NOT** remove the center grate when using the griddle.

CAUTION

DO NOT remove the griddle plate until the cooktop grates, surfaces and griddle plate are completely cooled.

CAUTION

The griddle plate on the cooktop may become very hot when using the cooktop, oven or broiler systems. Always use oven mitts when placing or removing the griddle plate.

Preheat the griddle according to the guide below and adjust for the desired setting.

Type of Food	Preheat Conditions	Cook Setting
Warming Tortillas	none	HI
Pancakes	HI 10 min.	HI
Hamburgers	HI 10 min.	HI
Fried Eggs	HI 5 min.	HI
Bacon	HI 10 min.	HI
Breakfast Sausage Links	HI 10 min.	HI
Hot Sandwiches	HI 10 min.	HI

NOTE

- If you cook on the griddle for an extended period, you may need to adjust the griddle temperature settings as the griddle retains heat.

IMPORTANT NOTES:

- Avoid cooking extremely greasy foods. Grease spillover can occur.
- The griddle can become hot when surrounding burners are in use.
- DO NOT overheat the griddle. This can damage the non stick coating.
- DO NOT use metal utensils that can damage the griddle surface. Do not use the griddle as a cutting board.
- DO NOT place or store items on the griddle.

How to Use the Oven

Before Use

Read all instructions before using.

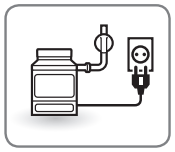

Make sure the electrical power cord and the gas valve are properly connected.

Check them for safety.

Check the correct use of the range depending on the type of food you will cook.

Make sure you know how to use the oven (temperature setting, time setting and recipe) for best results.

CAUTION

WHAT TO DO IF YOU SMELL GAS

1. Open windows.
2. **DO NOT** try to light any appliance.
3. **DO NOT** touch any electrical switch.
4. **DO NOT** use any phone in your building.
5. Immediately call your gas supplier from a neighbor's phone. Follow the gas supplier's instructions.
6. If you cannot reach your gas supplier, call the fire department.

NOTE

When using an oven thermometer in the oven cavity, temperatures may differ from the actual set oven temperature with all mode.

Do not cover rack or bottom with aluminum foil.

Do not block, touch or place items around the oven vent during cooking.

Your oven is vented through ducts at the center above the burner grate. Do not block the oven vent when cooking to allow for proper air flow. Do not touch vent openings or nearby surfaces during the use of any cooking operation.

- **DO NOT** place plastic or flammable items on the cooktop—they may melt or ignite if left too close to the vent.
- **DO NOT** place closed containers on the cooktop. The pressure in closed containers may increase, which may cause them to burst.
- Metal items will become very hot if they are left on the cooktop, and could cause burns.
- Handles of pots and pans on the cooktop may become hot if left too close to the vent.

As your oven heats up, the temperature increase of the air in the oven may cause water drops to occur on the door glass.

These water drops are harmless and will evaporate as the oven continues to heat up.

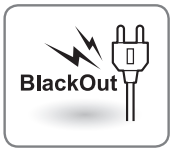

In case of power failure, do not use the oven.

The oven and broiler can not be used during a power outage. If the oven is in use when a power failure occurs, the oven burner shuts off and cannot be re-lit until power is restored. Once power is restored, you will need to reset the oven (or broil function)

CAUTION

DO NOT attempt to operate the electric ignition during an electrical power failure.

Using the Control Panel

For model: LRG3085/LRG3083/LSRG307

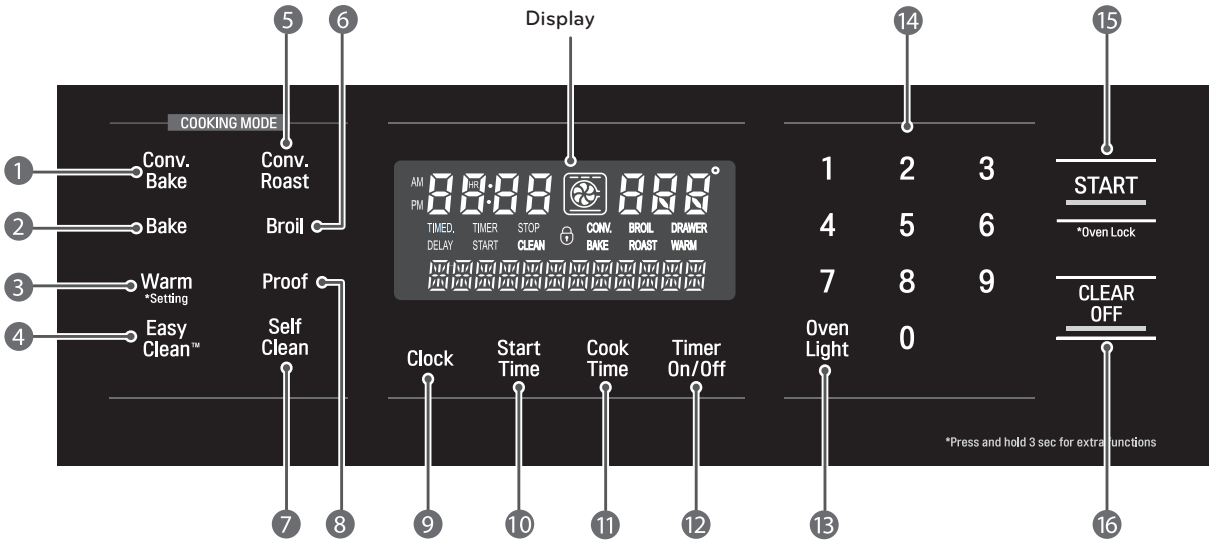

Name	Description
❶ Conv. Bake	Press the button to select baking with the Convection function.
❷ Bake	Press the button to enter the normal bake function.
❸ Warm / Setting	– Press this button to keep food warm in the oven. – Press and hold the button for 3 seconds to change the special settings (See pages 19-20.) **NOTE:** Special settings can only be used if no other function (Bake, Broil, Timer etc.) of the control panel is in use.
❹ EasyClean™	Cleans a lightly soiled oven automatically. Refer to "EasyClean™" in the Care and Cleaning section.
❺ Conv. Roast	Press the button to select roasting with the Convection function.
❻ Broil	Press the button to select the broil function.
❼ Self Clean	Press the button to select the self-cleaning function.
❽ Proof	Press the button to proof bread.
❾ Clock	Press the button to set the time of day.
❿ Start Time	Press this button and then press the number buttons to set a delayed start time. The oven will start at the time you set.
⓫ Cook Time	Press this button and then press the number buttons to set the amount of time you want your food to cook. The oven will shut off when the cooking time has run out.
⓬ Timer On/Off	Press the button to set or cancel the timer function.
⓭ Oven Light	Press the button to turn the oven light on or off.
⓮ Number	Use to set any function requiring numbers such as clock, timer or temperature.
⓯ START / Oven Lock	– Press the button to start all oven features. – Press and hold the button for 3 seconds to activate/deactivate the Oven Lockout function.
⓰ CLEAR OFF	Press and hold the button to cancel ALL oven operations except the clock, timer and warming drawer settings.

Using the Control Panel (Continued)

For model: LRG3081

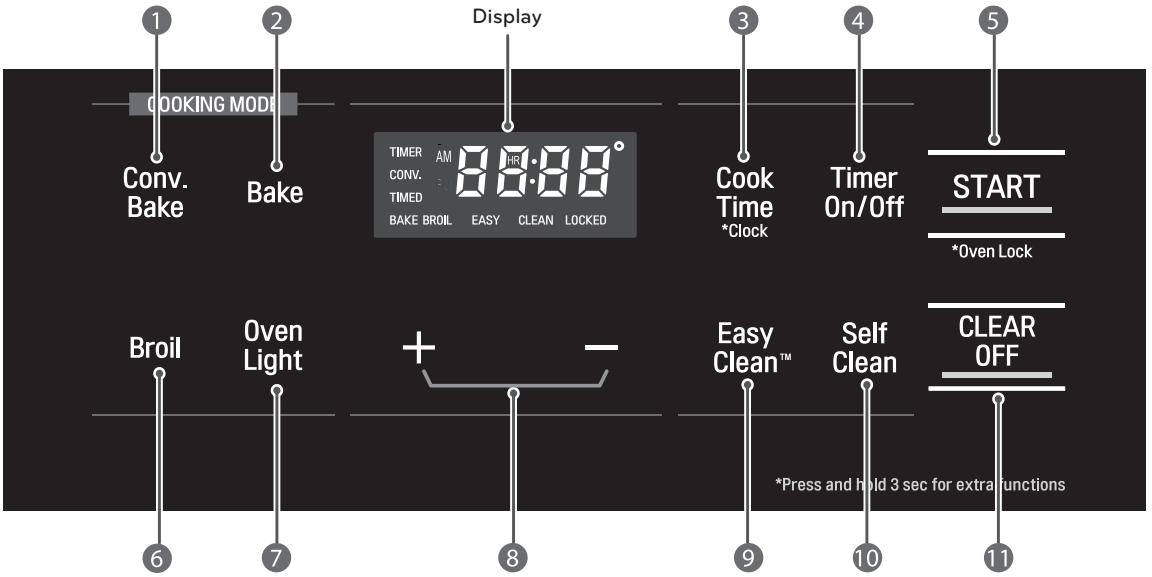

Name	Description
❶ Conv. Bake	Press the button to select baking with the Convection function.
❷ Bake	Press the button to enter the normal bake function.
❸ Cook Time/Clock	– Press and then use the + and – buttons to set the amount of time you want your food to cook. The oven will shut off when the cooking time has run out. – Press and hold the button for 3 seconds then use the + and - button to set the time of day.
❹ Timer On/Off	Press to select the timer feature.
❺ START /Oven Lock	– Must be pressed to start any cooking or cleaning function – Press and hold the button for 3 seconds to activate/deactivate the Oven Lockout function
❻ Broil	Press the button to select the broil function.
❼ Oven Light	Press the button to turn the oven light on or off.
❽ +/-	Enters or changes time, oven temperature. Sets HI or LO broil.
❾ EasyClean™	Cleans a lightly soiled oven automatically. Refer to “EasyClean™” in the Care and Cleaning section.
❿ Self Clean	Press the button to select self-cleaning function.
⓫ CLEAR OFF	Press to cancel all oven operations except the clock and timer.

Operating Instructions

How to Set the Convection Auto Conversion Function
(For model: LRG3085/LRG3083/LSRG307)

When using convection bake and roast, the convection auto conversion feature will automatically convert entered regular baking temperatures to convection baking temperatures. This feature is activated so that the display will show the actual converted temperature. For example, if you enter a regular recipe temperature of 350°F and press the **START** button, the display will show the converted temperature of 325°F.

1 Press and hold the **Warm** button for 3 seconds.

2 Press the **number 1** button to ENABLE or **2** button to DISABLE.

3 Press the **START** button to accept the desired change.

(For model: LRG3081)

1 Press the **Timer On/Off** button for 3 seconds. Then press the **Conv. Bake** button.

2 Press the **Conv. Bake** button to switch Auto Conversion ENABLE or DISABLE.

3 Press the **START** button to accept the desired change.

How to Adjust the Temperature Settings

You may find that your new oven cooks differently than the one it replaced. Use your new oven for a few weeks to become more familiar with it before changing the temperature settings. After familiarizing yourself with the new oven, if you still think that it is too hot or too cold, you can adjust the thermostat yourself.

CAUTION

DO NOT use thermometers, such as those found in grocery stores, to check the temperature setting of your oven. These thermometers may vary 20–40 degrees.

To increase(+) temperature adjustment
(For model: LRG3085/LRG3083/LSRG307)

1 Press and hold the **Warm** button for 3 seconds. Then press the **Warm** button once and "Adj" will display.

2 Using the **number** buttons, enter the temperature amount you wish to increase(+).
For example, to increase(+) the oven temperature 15 degrees, press 1 and 5.

3 Press the **START** button to set the increased (+) temperature.

(For model: LRG3081 / LRG3091 / LRG3021)

1 Press and hold the **Bake** button for 3 seconds.

2 Using the **+** button, enter the amount you wish to increase the temperature.

3 Press the **START** button to accept the increased temperature.

To decrease(-) temperature adjustment
(For model: LRG3085/LRG3083/LSRG307)

1 Press and hold the **Warm** button for 3 seconds. Then press the **Warm** button once and "Adj" will display.

2 Using the **number** button, enter the temperature amount you wish to decrease(-).
For example, to decrease(-) the oven temperature 15 degrees, press 1 and 5.

3 Press the **Warm** button again, and the decreased(-) temperature will appear in the display.

4 Press the **START** button to set the decreased (-) temperature.

(For model: LRG3081 / LRG3091 / LRG3021)

1 Press and hold the **Bake** button for 3 seconds.

2 Using the **-** button, enter the amount you wish to decrease the temperature.

3 Press the **START** button to accept the decreased temperature.

NOTE

- This adjustment will not affect the broiling or the Self Clean temperatures. The adjustment will be retained in memory after a power failure. The oven temperature can be increased (+) or decreased (-) as much as 35°F or 19°C.

How to Select a Language
(For model: LRG3085/LRG3083/LSRG307)

The default language of the oven's display is English. It can be changed to Spanish or French.

1 Press and hold the **Warm** button for 3 seconds. Then press the **Warm** button twice and "Lng" will display.

2 Press the **number 1** button for English, the **2** button for Spanish or the **3** button for French.

3 Press the **START** button to accept the change.

How to Set the Preheating Alarm Light On/Off

The interior oven light automatically turns on when the oven door is opened. When the oven reaches the set-temperature after preheat, the oven notifies preheat-end by flashing the oven lamp until the door is opened. You can activate or deactivate the smart oven light feature. The default setting is on.

(For model: LRG3085/LRG3083/LSRG307)

1 Press and hold the **Warm** button for 3 seconds. Then press the **Warm** button 3 times and "PrE" will display.

2 Press the **number 1** button for ON or the **2** button for OFF.

3 Press the **START** button to accept the change.

(For model: LRG3081 / LRG3091 / LRG3021)

1 Press and hold the **Timer On/Off** button for 3 seconds. The display will show Opt.

2 Press the **Oven Light** button to switch between ON and OFF.

3 Press the **START** button to accept the change.

How to Turn the Interior Oven Light On/Off

The oven light automatically turns ON when the door is opened. The oven light may also be manually turned ON or OFF by pressing the **Oven Light** button.

How to Adjust the Beeper Volume

(For model: LRG3085/LRG3083/LSRG307)

The beeper volume feature allows you to adjust the beeper to a more acceptable volume. There are four possible volume levels, loud, normal, low and mute.

1 Press and hold the **Warm** button for 3 seconds. Then press the **Warm** button 4 times and "BEEP" will display.

2 Press the **number 1** button for LOUD, the **2** button for NORMAL, the **3** button for LOW or the **4** button for MUTE.

3 Press the **START** button to accept the change.

(For model: LRG3081 / LRG3091 / LRG3021)

1 Press and hold the **Timer On/Off** button for 3 seconds. The Display will show Opt.

2 Press the **-** button to toggle between the various beeper volumes.

3 Press the **START** button to accept the change.

How to select Fahrenheit or Celsius

(For model: LRG3085/LRG3083/LSRG307)

Your oven control is set to use the Fahrenheit temperature selections but you may change this to use the Celsius selections.

1 Press and hold the **Warm** button for 3 seconds. Then press the **Warm** button 5 times and "Unit" will display.

2 Press the **number 1** button for F(Fahrenheit) or the **2** button for C(Celsius).

3 Press the **START** button to accept the change.

(For model: LRG3081 / LRG3091 / LRG3021)

1 Press and hold the **Timer On/Off** button for 3 seconds. The display will show Opt.

2 Press the **+** button to switch between the F and C settings.

3 Press the **START** button to accept the change.

How to Set the Clock (12 or 24 hour)

(For model: LRG3085/LRG3083/LSRG307)

1 Press the **Clock** button for 3 seconds.

2 Press the **number 1** button for 12-hour, the **2** button for 24-hour.

3 Press the **START** button to accept the desired change.

(For model: LRG3091 / LRG3021

1 Press the **Clock** button for 3 seconds.

2 Press the **Clock** button once for 12-hour, press twice for 24-hour.

3 Press the **START** button to accept the desired change.

NOTE

- The time of day cannot be changed during a timed baking or Self Clean cycle.
- To check the time of day when the display is showing other information, simply press the **Clock** button.
- If the number buttons are not pressed within 30 seconds after you press the **Clock** button, the display reverts to the original setting. If this happens, press the **Clock** button and reenter the time of day.
- If the display time is blinking, you may have experienced a power failure. Reset the time.

(For model: LRG3081)

1 Press the **Timer On/Off** button for 3 seconds, then press the **Cook Time** button. The display will show Opt.

2 Press the **+/-** or **Cook Time** button to switch the 12 hr clock and the 24 hr clock.

3 Press the **START** button to accept the desired change.

How to Set the Clock Time

(For model: LRG3085/LRG3083/LSRG307)

The clock must be set to the correct time of day in order for the automatic oven timing functions to work properly.

1 Press the **Clock** button once to set.

2 Press the **number** buttons to enter the time. Press the number buttons the same way you read them.
For example, to set 12:12, press the number buttons **1, 2, 1,** and **2** in that order.
If number buttons are not pressed within 30 seconds after you press the **Clock** button, the display reverts to the original setting. If this happens, press the **Clock** button and reenter the time of day.

3 Press the **START** button.

(For model: LRG3081 / LRG3091 / LRG3021)

1 Press the **Cook Time** button for 3 seconds.

2 Press the **+/-** button to set the time of day.

3 Press the **START** button. The clock will be set, and the display will reflect the change after a short delay.

Minimum & Maximum default settings

All of the features listed have a minimum and a maximum time or temperature setting that may be entered into the control. An entry acceptance beep will sound each time a control button is pressed.
An entry error tone (two short tones) will sound if the entry of the temperature or time is below the minimum or above the maximum setting for the feature.

FEATURE		MIN. TEMP./ TIME	MAX. TEMP./ TIME	DEFAULT
Clock	12 Hr.	1:00 Hr. / Min.	12:59 Hr. / Min.	
	24 Hr.	0:00 Hr. / Min.	23:59 Hr. / Min.	
Cook Time		1:00 Min.	11:59 Hr. / Min.	
Timer (LRG3085/ LRG3083/ LSRG307)		0:01 Min.	11:59 Hr. / Min.	
Timer (LRG3081/ LRG3091/ LRG3021)		0:10 Min.	11:59 Hr. / Min.	
Conv. Bake		300°F / 150°C	550°F / 285°C	350°F / 175°C
Conv. Roast		300°F / 150°C	550°F / 285°C	350°F / 175°C
Broil		Lo	Hi	
Bake		170°F / 80°C	550°F / 285°C	350°F / 175°C
Proof				12 Hr.
Warm				3 Hr.
Self Clean		2 Hr.	4 Hr.	3 Hr.

How to Use the Timer

(For model: LRG3085/LRG3083/LSRG307)

The timer does not control oven operations.

1 Press the **Timer On/Off** button once for minutes and seconds, press the button twice for hours and minutes.

2 Press the **number** button to select the desired time.
NOTE: If you make a mistake, press the **Timer On/Off** button and begin again.

3 Press the **Timer On/Off** button to start the countdown.
NOTE: If **Timer On/Off** is not pressed the timer will return to the time of day.

4 When the timer reaches **:00, "End"** will show in the display. The clock will sound with the timer alarm melody every 15 seconds until the **Timer On/Off** button is pressed.

(For model: LRG3081 / LRG3091 / LRG3021)

NOTE

- If you press **Timer On/Off** once, it allows you to set the time in minutes and seconds.
(For example: if you press 50, it means 50 seconds.)
- If you press **Timer On/Off** twice, it allows you to set the time in hours and minutes.
(For example: if you press 5, it means 5 minutes.)

1 Press the **Timer On/Off** button once to set the time in minutes and seconds, or press the button twice to set the time in hours and minutes. TIMER will flash in the display.

2 Press the **+** or **-** button until the desired time appears in the display.

3 Press the **Timer On/Off** button to start the countdown. TIMER will show in the display.

NOTE

If **Timer On/Off** is not pressed, the timer will return to the time of day.

4 When the timer reaches :00, End will show in the display. The clock will sound with 3 beeps every 15 seconds until the **Timer On/Off** button is pressed.

NOTE

If the remaining time is not in the display, recall the remaining time by pressing **Timer On/Off.**

How to Use the Oven Lockout Feature

The oven lockout feature automatically locks the oven door and prevents most oven controls from being turned on. It does not disable the clock, timer or the interior oven light.

(For model: LRG3085/LRG3083/LSRG307)

1 Press and hold the **START** button for three seconds. A melody will sound, LOCKING will appear and 🔒 will flicker in the display. Once the oven door is locked the oven lockout indicator will stop flashing and will remain on and OVEN LOCKOUT will appear.

2 To deactivate the lockout feature, press and hold the **START** button for three seconds. UNLOCKING will be displayed and 🔒 will flash until it is completely unlocked.

(For model: LRG3081 / LRG3091 / LRG3021)

1 Press and hold the **START** button for three seconds. A melody will sound, LOCKED will flicker in the display. Once the oven door is locked the oven lockout indicator will stop flashing and will remain on.

2 To deactivate the lockout feature, press and hold the **START** button for three seconds. LOCKED will flash until it is completely unlocked.

NOTE

If the lockout feature is activated with either of the doors open, the doors will not close completely until the Lockout feature is deactivated.

Removing and Replacing the Oven Racks

CAUTION

- Replace oven racks before turning the oven on to prevent burns.
- DO NOT cover the racks with aluminum foil, or any other material, or place anything on the bottom of the oven. Doing so will result in poor baking and may damage the oven bottom.
- Only arrange oven racks when the oven is cool.

Removing the racks:

1. While wearing oven mitts, grasp the oven rack.
2. Pull the rack straight out until it stops.
3. Lift up the front of the rack.
4. Pull out the rack.

Replacing the racks:

1. While wearing oven mitts, place the end of the rack on the support.
2. Tilt the front end of the rack up.
3. Push the rack in.
4. Check that the rack is properly in place.

Preheating and Pan Placement

Preheat the oven if the recipe calls for it. To preheat, set the oven at the correct temperature. Preheating is necessary when convection baking and for good results when baking cakes, cookies, pastry and breads.

Baking results will be better if baking pans are centered in the oven as much as possible. If baking with more than one pan, place the pans so each has at least 1" to 1-1/2" of air space around it.

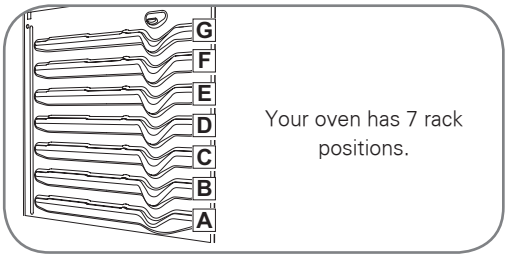

If cooking on multiple racks, place the oven racks in positions B and D or C and E (for 2 racks). Place the cookware as shown in Fig. 1, 2.

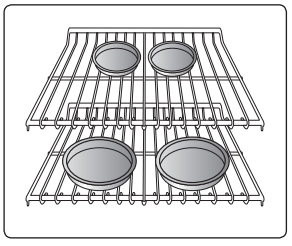

Fig. 1

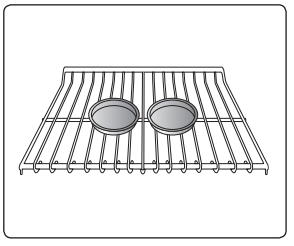

Fig. 2

Type of Food	Rack Position
Frozen pies (on cookie sheet)	B or C
Angel food cake, bundt or pound cakes	C
Biscuits, muffins, brownies, cookies, cupcakes, layer cakes, pies	D
Casseroles	D
Roasting	B

Power Outage

The oven or broiler can not be used during a power outage. If the oven is in use when a power failure occurs, the oven burner shuts off and cannot be re-lit until power is restored. Once power is restored you will need to restart the oven or broil function.

CAUTION

DO NOT attempt to operate the electric ignition oven during an electrical power failure.

Oven Moisture

As your oven heats up, the temperature increase of the air in the oven may cause water droplets to form on the door glass. These droplets are harmless and will evaporate as the oven continues to heat up.

Aluminum Foil

NEVER cover the oven bottom with aluminum foil.

Aluminum foil may also be used to catch a spillover. To do so, place a small sheet of foil on a lower rack several inches below the food.

NEVER entirely cover a rack with aluminum foil. This will disturb the heat circulation and result in poor baking.

Bake

(For model: LRG3085/LRG3083/LSRG307)

BAKE is used to prepare foods such as pastries, breads, casseroles and roasts. The oven can be programmed to bake at any temperature from 170°F (75°C) to 550°F (285°C). The default temperature is 350°F (175°C).

To set the oven to BAKE (example to 375°F):

NOTE

- Your oven is not designed for open-door cooking.

1 Press the **Bake** button.

2 Set the oven temperature using the number buttons (ex: press **3**, **7**, **5**).

3 Press the **START** button.
As the oven preheats, the temperature is displayed and rises in 5 degree increments. Once the oven reaches the desired temperature, a tone will sound and the oven light will blink on and off.

NOTE

- Preheating is necessary for better cooking results. Place the food in the oven after preheating.
- You may also change the temperature while cooking by following steps 1-3.

4 When cooking is complete, press the **CLEAR OFF** button.

5 Remove the food from the oven.

(For model: LRG3081 / LRG3091 / LRG3021)

1 Press **Bake**. 350° will appear in the display and bake will flash.

2 Select the oven temperature.
Press or press and hold the **+** or **-** pads.
- Press the **+** pad to increase the temperature.
- Press the **-** pad to decrease the temperature.

3 Press **START** to accept the temperature change.

The word "**BAKE**" and 100° will be displayed. As the oven heats up, the display will show the changing temperature. After the oven has reached the desired temperature, long beeps will sound 5 times and the oven lamp will flash.

4 Check the food for doneness at the minimum time on the recipe. Cook longer if necessary.

5 Press the **CLEAR OFF** button when cooking is complete.

To change the Bake Temperature while cooking

1 Press the **Bake** button.

2 Then press the **+** or **-** button until the desired temperature is displayed.

3 Press **START.**

Baking Tip

THE TYPE OF MARGARINE USED WILL AFFECT BAKING PERFORMANCE

Most recipes for baking have been developed using high fat products such as butter or margarine (80% fat). If you decrease the fat, the recipe may not give the same results as with a higher fat product.

Recipes may fail if cakes, pies, pastries, cookies or candies are made with low fat spreads. The lower the fat content of a spread product, the more noticeable these differences become.

Federal standards require products labeled "margarine" to contain at least 80% fat by weight. Low fat spreads, on the other hand, contain less fat and more water. The high moisture content of these spreads affects the texture and flavor of baked goods. To get the best results from your favorite old recipes, use margarine, butter or stick spreads containing at least 70% vegetable oil.

Broil

Your oven is designed for CLOSED DOOR broiling.

1 Place the food on the grid of the broiler pan.

2 Follow suggested rack positions in the Broiling Chart.

3 The oven door must be closed to begin broiling.
The oven door must be closed during broiling.

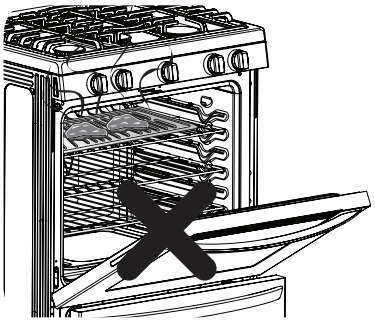

NOTE

If the oven door remains open for more than 15 seconds during broil the burner will shut off. The broil burner will automatically come back on once the door is closed.

4 Press the **Broil** button once for **Hi** and twice for **Lo**.

5 Press the **START** button.

6 When broiling is finished, press the **CLEAR OFF** button.

CAUTION

- **DO NOT** use the broiler pan without the grid.
- **DO NOT** cover the broiler pan or grid with aluminum foil. Exposed grease could ignite.
- To prevent food from contacting the broil burner and to prevent grease splattering, do not use the roasting rack when broiling.

Serve the food immediately, and place the pan outside the oven to cool during the meal for easiest cleaning.

Use **LO Broil** to cook foods such as poultry or thick cuts of meat thoroughly without over-browning them.

NOTE

- Some smoke may occur during broiling. This is normal.

Broiling Chart

Broiling times will be affected by the size, weight, thickness, starting temperature and your preference of doneness. This guide is based on meats at refrigerated temperatures.

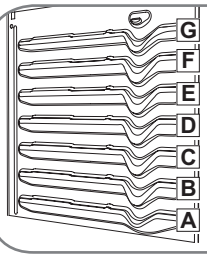

Your oven has 7 rack positions.

Food	Quantity and/or Thickness	Rack Position	First Side Time (min.)	Second Side Time (min.)	Comments
Ground Beef Well Done	1 lb. (4 patties) 1/2 to 3/4" thick	F	7~8	5-6	Space evenly. Up to 8 patties may be broiled at once.
Beef Steaks Rare Medium Well Done Rare Medium Well Done	 1" thick 1 to 1 1/2 lb. 1 1/2" thick 2 to 2 1/2 lb.	 F F F D D D	 7 12 13 10 12-15 25	 5 5-6 8-9 6-7 10-12 16–18	Steaks less than 1" thick cook through before browning. Pan frying is recommended. Slash fat.
Bacon	1/2 lb. (about 8 thin slices)	D	8	3	Arrange in single layer.
Pork Chops Well Done	 2 (1/2" thick.) 2 (1" thick) about 1 lb.	 D D	 10 13	 8 8~9	Slash fat.
Lamb Chops Medium Well Done Medium Well Done	 2 (1" thick) about 10 to 12 oz. 2 (1 1/2" thick) about 1 lb	 E E E E	 6 10 10 17	 4–7 10 4-6 12-14	Slash fat.
Chicken	1 whole 2 to 2 1/2 lbs., split lengthwise 4 bone-in breasts	B B	35-40 25-30	25 10-15	Brush each side with melted butter. Broil skin-side down.
Lobster Tails	2–4 6 to 8 oz. each	C	13–16	Do not turn over.	Cut through back of shell. Spread open. Brush with melted butter before broiling and after half of broiling time.
Fish Fillets	1/4 to 1/2" thick	E	7~8	6	Handle and turn very carefully. Brush with lemon butter before and during cooking, if desired. Preheat broiler to increase browning.
Ham Slices (precooked)	1" thick 1/2" thick	C D	10 7	5 4	Increase time 5 to 10 minutes per side for 1 1/2" thick or home-cured ham.

This chart is only for reference. Adjust cook time according to your preference.

NOTE

The USDA(The United States Department of Agriculture) advises that consuming raw or undercooked fish, meat, or poultry can increase your risk of food borne illness.
The USDA has indicated the following as safe minimum internal temperatures for consumption:

- Ground beef, veal, pork, or lamb: 160 °F
- Poultry: 165 °F
- Beef, veal, pork, or lamb: 145 °F
- Fish/seafood: 145°F

Cook Time (Timed Cook)

The TIMED COOK feature allows you to set the oven to cook for a specific length of time. This feature can only be used with the BAKE, CONVECTION BAKE and CONVECTION ROAST modes.

(For model: LRG3085/LRG3083/LSRG307)

Setting the TIMED COOK function (example, BAKE at 300°F for 30 minutes):

Make sure that the clock is set to the correct time of day.

1 Press the **Bake** button. **350°F** will appear in the display.

2 Use the number buttons to set the temperature. Press **3, 0** and **0**.

3 Press the **Cook Time** button. **TIMED** will flash. **BAKE, 0:00** and **300°F** will appear in the display.

4 Set the baking time: Press **3** and **0** (for 30 minutes). The baking time can be set for any amount of time between 1 minute and 11 hours and 59 minutes.

5 Press the **START** button. The display will show the cooking time countdown.

NOTE

To set the WARM function to engage at the end of the timed cook cycle, repeat steps 1-4 and then press the **Warm** button. **WARM** will appear in the display. (Refer to the "Warm" section on page 31.)

(For model: LRG3081 / LRG3091 / LRG3021)

1 Press the **Bake** button. 350° will appear in the display and BAKE will flash.

2 Press or press and hold the **+** or **-** button to set the desired oven temperature.
- Press the **+** button to increase the temperature.
- Press the **-** button to decrease the temperature.

3 Press the **Cook Time** button.
- TIMED flashes.
- 0:00 lights in the display.

NOTE

If your recipe requires preheating, you may need to add additional time to the length of the cooking time.

4 Press the **+** or **-** button to set the desired length of cooking time, while TIMED is still flashing.

NOTE

You can set the cooking time from 1 minute up to 11 hours and 59 minutes. The cooking time that you entered will be shown in the display. (If you select Cook Time first and then adjust the Bake Temperature, the oven temperature will be displayed instead.)

5 Press the **START** button. BAKE will stop flashing and will light in the display. The display shows either the oven temperature that you set or the baking time countdown.

The oven will continue to cook for the set amount of time and then turn off automatically. When the cooking time has elapsed:

- **END** and the time of day will show in the display.
- When WARM is set, the warming function is activated after cooking for the set time. (For model : LRG3085/LRG3083)

To change the cook time while operating the oven (example, to change the cook time from 30 minutes to 1 hour and 30 minutes):
(For model : LRG3085/LRG3083/LSRG307)

1 Press the **Cook Time** button.

2 Press the number buttons to change the baking time: **1, 3, 0.**

3 Press the **START** button to accept the change.

(For model: LRG3081 / LRG3091 / LRG3021)

1 Press the **Cook Time** button.

2 Press or Press and hold the + or - button to change the desired baking time until HR 1:30.

3 Press the START button to accept the change.

Start Time (Delayed Timed Cook)

The automatic timer of the DELAYED TIMED COOK function will turn the oven ON and OFF at the time you select. This feature can only be used with the: BAKE, CONVECTION BAKE and CONVECTION ROAST modes.

(For model: LRG3085/LRG3083/LSRG307)

To set the oven for Delayed Start (example, to BAKE at 300°F and start operating the bake mode at 4:30):

Make sure that the clock is set for the correct time of day.

1 Press the **Bake** button. **350°F** will appear in the display.

2 Use the number buttons to set the temperature: Press **3, 0** and **0.**

3 Press the **Start Time** button.

4 Set the start time: Press **4, 3** and **0** for 4:30.

5 Press the **START** button. A short beep will sound and the oven will begin baking.

NOTE

- To cancel the DELAYED TIMED COOK function, press the **CLEAR OFF** button at any time.
- To change the cooking time, repeat steps 3-4 and press the **START** button.
- If your oven clock is set as a 12 hour clock, you can delay the cook time for 12 hours. If your oven clock is set as a 24 hour clock, you can delay the cook time for 24 hours.

CAUTION

- Use the automatic timer when cooking cured or frozen meats and most fruits and vegetables. Foods that can easily spoil, such as milk, eggs, fish, meat or poultry, should be chilled in the refrigerator. Even when chilled, they should not stand in the oven for more than 1 hour before cooking begins, and should be removed promptly when cooking is completed.
- Eating spoiled food can result in sickness from food poisoning.

(For model: LRG3085 / LRG3083)

To set the oven for Delayed Start (example, to BAKE at 300°F and start operating the bake mode at 4:30):

Make sure that the clock is set for the correct time of day.

1 Press the **Bake** button. **350°F** will appear in the display.

2 Use the buttons **+** or **-** to set the temperature: **300°F**

3 Press the **Start Time** button.

4 Set the start time: Press **+** or **-** to set 4:30.

5 Press the **START** button. A short beep will sound and the oven will begin baking.

Convection Bake

Convection baking allows for even cooking and excellent results when using multiple racks at the same time. It could also shorten cooking time.

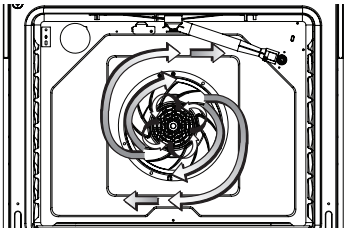

Benefits of CONVECTION BAKE

1) Evenly baked results using multiple racks.

2) Faster cooking time.

Setting the CONVECTION BAKE function (example, 375°F):

(For model : LRG3085/LRG3083/LSRG307)

1 Press the **Conv. Bake** button. The display will flash **350°F.**

2 Set the oven temperature using the number buttons: Press **3, 7** and **5**.

3 Press the **START** button. The display will show **CONV. BAKE** and the oven temperature starting at 100°F.

4 When cooking has finished or to cancel, press the **CLEAR OFF** button.

(For model : LRG3081)

1 Press the **Conv. Bake** button. The display will flash **350°F.**

2 Select the oven temp. Press or press and hold the **+** or **-** pads until the display reads 375°F

3 Press the **START** button.

4 When cooking has finished or to cancel, press the **CLEAR OFF** button.

As the oven preheats, the display will show increasing temperatures in 5 degree increments. Once the oven reaches the set adjusted temperature, a tone will sound and the oven light will flash on and off. The display will show the auto converted oven temperature **350°F, CONV. BAKE** and the fan icon. (For model : LRG3085/LRG3083)

The display will show the auto converted oven temperature **350°F, CONV.** (For model : LRG3081)

NOTE

When cooking using the convection cycle, the oven temperature is automatically reduced by 25°F. The display will show the changed temperature.
This feature is called "AUTO CONVERSION".
Your range comes with this feature ENABLED.
To DISABLE the auto conversion feature, see "How to set convection auto conversion function" in the Operating Instructions section of this manual.

NOTE

You will hear a fan while cooking with convection. The fan will stop when the door is open, but the heat will not turn off. The fan will not start until the preheat temperature is reached.

Cookware for Convection Cooking

Check to see if your cookware leaves room for air circulation in the oven before using your convection oven. If you are baking with several pans, leave space between them. Also, be sure the pans do not touch each other or the walls of the oven.

1) Paper and Plastic

   You can use heat-resistant paper and plastic containers that are recommended for use in regular ovens in convection ovens.

2) Metal and Glass

   Any type of cookware safe for you conventional oven will also work in your convection oven.
   However, metal pans heat the fastest and are recommended for convection baking.

   - Darkened or matte-finished pans will bake faster than shiny pans.
   - Glass or ceramic pans cook more slowly.

When baking cookies, use a flat cookie sheet instead of a pan with low sides to get the best results
For recipes like oven-baked chicken, use a pan with low sides. Hot air cannot circulate well around food in a pan with high sides.

NOTE

- Cookies and biscuits should be baked on pans with no sides or very low sides to allow heated air to circulate around the food. Food baked on pans with a dark finish will cook faster.
- Foods cooked on a single oven rack will generally cook faster and more evenly with convection bake. Multiple oven rack cooking may slightly increase cook times for some foods, but the overall result is time saved. Breads and pastries brown more evenly.
- When cooking foods on multiple racks use the convection mode.
- The convection fan turns on and off during the convection bake cycle to allow for more even heating. This is normal.
- Use the recommended size pan in recipe.
- Some frozen foods have been developed to use commercial convection ovens. For best results in this oven, preheat the oven and use the temperature recommended in the recipe.
- If a food manufacturer gives specific convection baking package instructions, program the AUTO CONVERSION temperature so that the preheated oven temperature reads the same as the temperature on the package instructions.

Multi-Rack Convection Baking

You can bake foods with excellent results using multiple racks because heated air is circulated evenly throughout the oven. Multi-rack baking may increase cook times slightly for some foods but the overall result is time saved.
Cookies, muffins, biscuits and other quick breads give very good results with multi-rack baking.

When baking larger food items using 2 racks, place the first rack in position B and the second rack in position D or place the first rack in position C and the second rack in position E. When baking larger food items using 3 racks, place the first rack in position B, the second rack in position D and the third rack in position F.

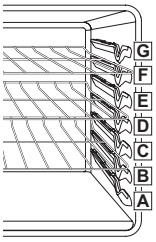

When convection baking with only 1 rack, follow the rack positions recommended in the "Using the Oven" section.

Convection Roast

(For model: LRG3085/LRG3083/LSRG307)

The **CONVECTION ROAST** feature is designed to give optimum roasting performance. CONVECTION ROAST combines cooking with the convection fan with roasting meats and poultry. The heated air circulates around the food from all sides, sealing in juices and flavors. Foods are crispy brown on the outside while staying moist on the inside. Convection roasting is especially good for large tender cuts of meat, uncovered.

Setting the CONVECTION ROAST function (example, 375°F):

1 Press the **Conv. Roast** button. The display will flash **350°F.**

2 Set the oven temperature using the number buttons: Press **3, 7** and **5.**

3 Press the **START** button. The display will show **CONV. ROAST** and the oven temperature starting at 100°F.

As the oven preheats, the display will show increasing temperatures in 5 degree increments. Once the oven reaches the set adjusted temperature, a tone will sound and the oven light will flash on and off. The display will show the auto converted oven temperature **350°F, CONV. ROAST** and the fan icon.

4 When cooking has finished or to cancel, press the **CLEAR OFF** button.

NOTE

When cooking using a convection cycle the oven temperature is automatically reduced by 25°F. The display will show the changed temperature.
This feature is called"AUTO CONVERSION".
Your range comes with this feature "ENABLED".
To DISABLE the auto conversion feature, see "How to set convection auto conversion function" in the Operating Instructions section of this manual.

Warm

(For model: LRG3085/LRG3083/LSRG307)

The WARM function will keep cooked food warm for serving up to 3 hours after cooking has finished. The Warm function may be used without any other cooking operations or can be used after cooking has finished using TIMED BAKE or DELAYED TIMED BAKE.

Setting the WARM function:

1 Press the **Warm** button.

2 Press the **START** button.

3 Press the **CLEAR OFF** button at any time to cancel.

To set the WARM function after timed cooking:

1 Select the cooking function.

2 Enter the oven temperature using the number buttons.

3 Press the **Cook Time** button and enter the cooktime using the number buttons.

4 Press the **Warm** button.

5 Press the **START** button.

6 When cooking is finished, press the **CLEAR OFF** button to cancel the WARM function.

NOTE

The WARM function is intended to keep food warm. Do not use it to cool food down.

NOTE

If **CLEAR OFF** is pressed prior to the delay functions starting, all settings will be canceled.

Proof

(For model: LRG3085/LRG3083/LSRG307)

Setting the PROOF function:

This feature maintains a warm oven for rising yeast leavened products before baking.

1 Use rack B or C for proofing.

2 Press the **Proof** button. PrF will appear in the display.

3 Press the **START** button.

4 Press the **CLEAR OFF** button when proofing is finished.

NOTE

- To avoid lowering the oven temperature and lengthening proofing time, do not open the oven door unnecessarily. Check bread products early to avoid overproofing.
- Do not use the proofing mode for warming food or keeping food hot. The proofing oven temperature is not hot enough to keep foods at safe temperatures.
  Use the WARM feature to keep food warm. Proofing will not operate when the oven is above 125°F. OVEN IS HOT will show in the display.

CARE AND CLEANING

Gas Surface Burner

CAUTION

- **DO NOT** clean this appliance with bleach.
- To prevent burns, wait until the cooktop has cooled down before touching any of its parts.
- Always wear gloves when cleaning the cooktop.
- Use care when cleaning the cooktop. The pointed metal ends on the electrodes could cause injury.

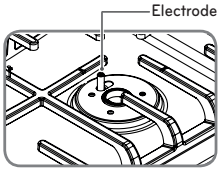

Removing and Replacing the Gas Surface Burner

Grates and burner caps/heads can be removed for care and cleaning.

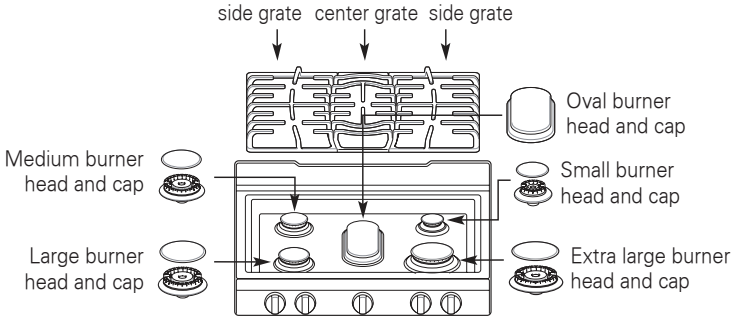

LRG3085/LRG3083/LSRG307

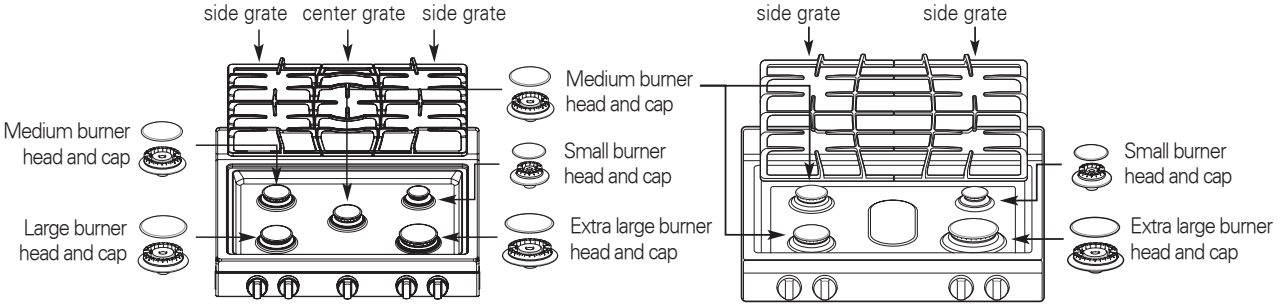

LRG3081 / LRG3091 **LRG3021**

	General burner
Burner cap is properly set.	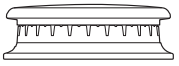
Burner cap is NOT properly set.	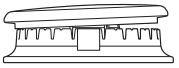

Burner Heads/Caps

For even and unhampered flame, the slits in the burner heads must be kept clean at all times. The burner heads and caps (and the oval burner head and cap assembly) can be lifted off. Do not attempt to remove the oval burner cap.

- Wash the burner bases and caps in hot soapy water and rinse with clean water. Run water through the oval burner from the bottom stem to flush out debris.
- Any spills on or around an electrode must be carefully cleaned.
- To remove burnt-on food, soak the burner heads in a solution of mild liquid detergent and hot water for 20–30 minutes. For stubborn stains, use a toothbrush or wire brush.
- The burners will not operate properly if the burner ports or electrodes are clogged or dirty. Use a wire brush or pipe cleaner to unclog ports on the oval burner.
- Burner caps and heads should be cleaned routinely, especially after bad spillovers.
- Burners will not light if the cap is removed.

After Cleaning the Burner Heads/Caps

Shake out any excess water and then let them dry thoroughly. Placing the oval burner up-side down will allow the water to drain out more easily. Replace the burner heads and caps over the electrodes on the cooktop, in the correct locations according to their size. Make sure the hole in the burner head is positioned over the electrode.

Burner Grates

The range consists of three separate professional-style grates. For maximum stability, these grates should only be used when in their proper position. The two side grates can be interchanged from left to right and front to back. The center grate can be interchanged from front to back.

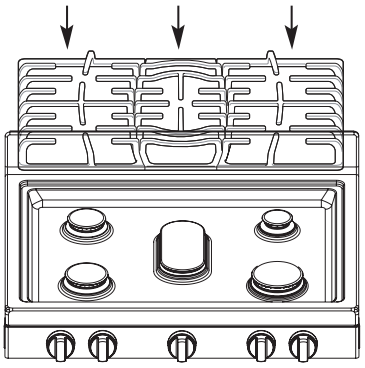

LRG3085/LRG3083/LSRG307

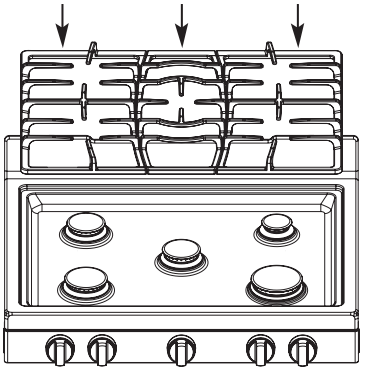

LRG3081 / LRG3091

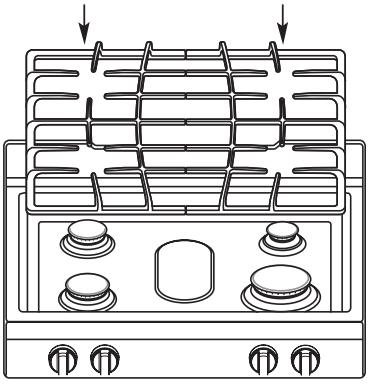

LRG3021

NOTE

Do not operate a burner for an extended period of time without cookware on the grate. The finish on the grate may chip without cookware to absorb the heat.

Cleaning the Burner Grates

- Do not lift the grates out until they have cooled.
- Grates should be washed regularly and after spillovers.
- Wash the grates in hot, soapy water and rinse with clean water.
- The grates are dishwasher safe.
- After cleaning the grates, let them dry completely and securely position them over the burners.

CAUTION

DO NOT put the grate in the oven during self cleaning mode.

Cooktop Surface

To avoid burns, do not clean the cooktop surface until it has cooled. Foods with high acid or sugar content could cause a dull spot if allowed to set. Wash and rinse when the surface has cooled. For other spills such as oil/grease spattering, etc., wash with soap and water when the surface has cooled. Then rinse and polish with a dry cloth.

NOTE

Do not lift the cooktop surface. Lifting the cooktop surface can lead to damage and improper operation of the range.

Stainless Steel Surfaces

To inquire about purchasing stainless steel appliance cleaner or polish, or to find the location of a dealer nearest you, please call our toll-free customer service number:
1-800-243-0000 (U,S) or Visit our website at: **www.lg.com,** for panama please call **507-260-0000.**

NOTE

- Do not use a steel wool pad; it will scratch the surface.
- To clean the stainless steel surface, use warm sudsy water or a stainless steel cleaner or polish.
- Always wipe in the direction of the metal surface finish.

Oven Air Vents

Air openings are located at the rear of the cooktop, at the top and bottom of the oven door, and at the bottom of the range.

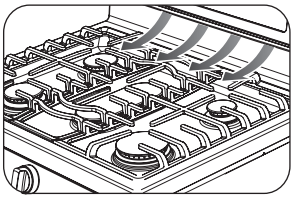

LRG3085/LRG3083/ LSRG307

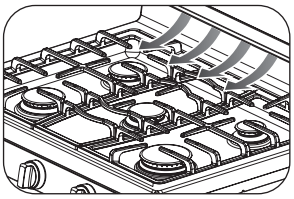

LRG3081 / LRG3091

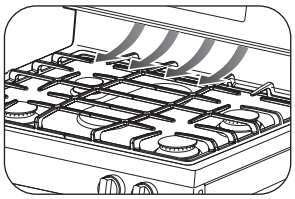

LRG3021

NOTE

Do not block the vents and air openings of the range. They provide the air inlet and outlet that are necessary for the range to operate properly with correct combustion.

Control Panel

To prevent activating the control panel during cleaning, unplug the range. Clean up splatters with a damp cloth using a glass cleaner. Remove heavier soil with warm, soapy water. Do not use abrasives of any kind.

Front Manifold Panel and Knobs

It is best to clean the manifold panel after each use of the oven. For cleaning, use a damp cloth and mild soapy water or a 50/50 solution of vinegar and water. For rinsing, use clean water and polish dry with a soft cloth.

NOTE

- Do not use abrasive cleansers, strong liquid cleaners, plastic scouring pads or oven cleaners on the manifold panel. Doing so will damage the finish.
- Do not try to bend the knobs by pulling them up or down or by hanging a towel or other objects on them. This can damage the gas valve shaft.
- The control knobs may be removed for easy cleaning.
- To clean the knobs, make sure that they are in the “OFF” position and pull them straight off the stems.
- To replace the knobs, make sure the knob has the “OFF” position centered at the top, and slide the knob directly onto the stem.

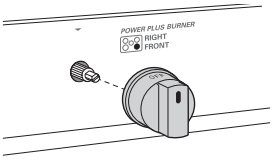

NOTE

To prevent scratching, do not use abrasive cleaners on any of these materials.

Oven Door

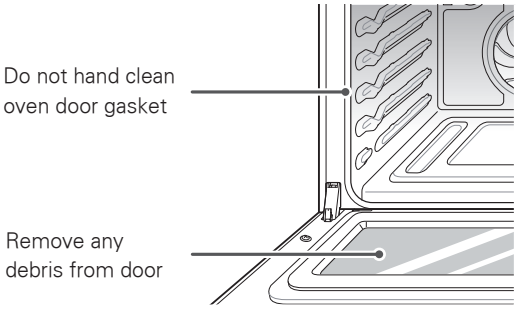

- Use soapy water to thoroughly clean the oven door. Rinse well. **DO NOT** immerse the door in water.
- You may use a glass cleaner on the outside glass of the oven door. **DO NOT** spray water or glass cleaner on the door vents.
- **DO NOT** use oven cleaners, cleaning powders, or harsh abrasive cleaning materials on the outside of the oven door.
- **DO NOT** clean the oven door gasket. The oven door gasket is made of a woven material that is essential for a good seal. Care should be taken not to rub, damage, or remove this gasket.

NOTE

Do not use cleaners or harsh abrasive cleaning materials on the outside of the oven door. Doing so can cause damage.

NOTE

You may notice a "rainbow" effect on the oven door. This is normal. The glass has been treated with a coating to reflect heat for greater thermal efficiency, much like the windows in your home.

Removing and Replacing the Oven Door and Drawer

CAUTION

- The door is very heavy. Be careful when removing and lifting the door.
- DO NOT lift the door by the handle.
- DO NOT hit the glass with pots, pans, or any other object.
- Scratching, hitting, jarring or stressing the glass may weaken its structure, causing an increased risk of breakage at a later time.

Removing the Oven Door

1. Fully open the door. Pull the hinge locks away from the oven interior, until they are fully unlocked. A tool, such as a small flat-blade screwdriver, may be required.

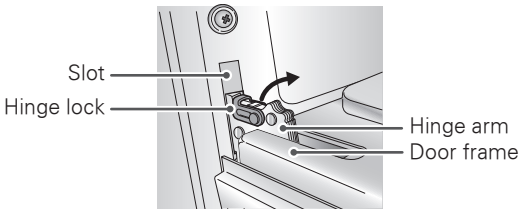

Pull hinge locks down to unlock

2. Firmly grasp both sides of the door at the top.
   Close the door to the removal position (approximately five degrees from fully closed).

About 5°

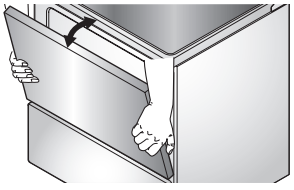

Removal Position

3. Lift the door up and out until the hinge arm is clear of the slot. Put the door on the floor.

Replacing the Oven Door

1. Firmly grasp both sides of the door at the top.

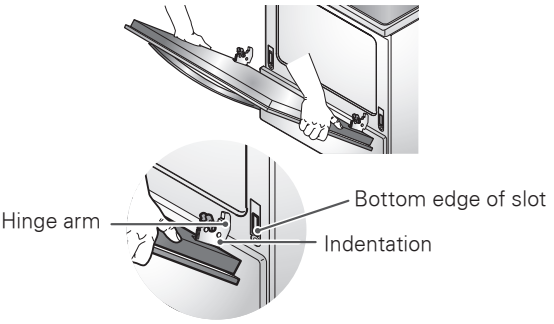

2. With the door at the same angle as the removal position, seat the indentation of the hinge arm into the bottom edge of the hinge slot. The notch in the hinge arm must be fully seated into the bottom of the slot.

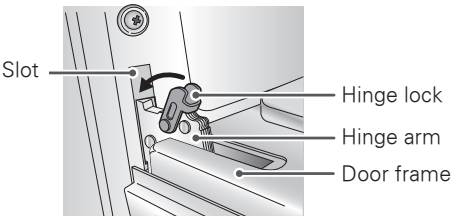

Push hinge locks up to lock

3. Fully open the door. If the door will not fully open, the indentation is not seated correctly in the bottom edge of the slot.

4. Push the hinge locks down toward the bottom of the door to the locked position. Close the oven door.

Removing the Drawer

WARNING

Disconnect the electrical power to the range at the main fuse or circuit breaker panel. Failure to do so can result in severe personal injury, death, or electrical shock.

Most cleaning can be done with the drawer in place; however, the drawer may be removed if further cleaning is needed. Use warm water to thoroughly clean.

1. Fully open the drawer.
2. Remove the two screws.

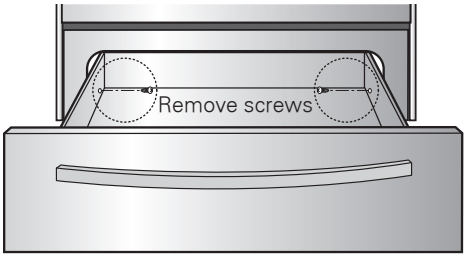

3. Locate the glide lever on each side of the drawer. Push down on the left glide lever and pull up on the right glide lever.

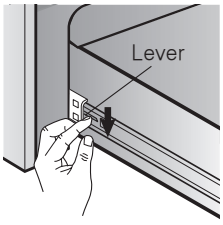

Push down with finger

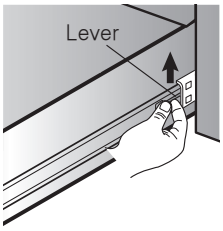

Pull up with finger

4. Pull the storage drawer away from the range.

Replacing the Drawer

1. Pull the bearing glides to the front of the chassis glide.
2. Align the glide on each side of the drawer with the glide slots on the range.
3. Push the drawer into the range until levers “click ” (approximately 2 inch).
4. Pull the drawer open again to seat bearing glides into position.
5. Replace the two screws.

WARNING

DO NOT touch interior surfaces of oven between door and drawer.

- During and after use, do not touch interior surfaces of oven between door and drawer until they have had sufficient time to cool.
- Failure to follow this warning result in severe personal injury.

SELF CLEAN

The self clean cycle uses extremely hot temperatures to clean the oven cavity. While running the Self Clean cycle, you may notice smoking or an odor. This is normal; especially if the oven is heavily soiled.

During Self Clean, the kitchen should be well ventilated to minimize the odors from cleaning.

CAUTION

- DO NOT leave small children unattended near the appliance. During the Self Clean cycle, the outside of the range can become very hot to touch.
- If you have pet birds, move them to another well-ventilated room. The health of some birds is extremely sensitive to the fumes given off during the Self Clean cycle of any range.
- DO NOT line the oven walls, racks, bottom or any other part of the range with aluminum foil or any other material. Doing so will destroy heat distribution, produce poor baking results and cause permanent damage to the oven interior (aluminum foil will melt to the interior surface of the oven).
- DO NOT force the door open. This can damage the automatic door locking system. Use care when opening the oven door after the Self Clean cycle. Stand to the side of the oven when opening the door to allow hot air or steam to escape. The oven may still be VERY HOT.

Before Starting Self Clean:

- Remove the oven racks, broiler pan, broiler grid, all cookware, aluminum foil or any other material from the oven.
- The kitchen should be well ventilated to minimize the odors from cleaning.
- Wipe any heavy spillovers on the bottom of the oven.
- Make sure that the oven light bulb cover is in place and the oven light is off.
- The oven light cannot be turned on during a self clean cycle. The oven light cannot be turned on until the oven temperature has cooled below 500˚F (260˚C) after a self clean cycle is complete.

During the self clean cycle, the cooktop elements and warming drawer cannot be used.

NOTE

- Remove oven racks and accessories before starting the self clean cycle.
- If oven racks are left in the oven cavity during the self clean cycle, they will discolor and become difficult to slide in and out.
- Clean the frame of the oven and door with hot soapy water. Rinse well.
- Do not clean the gasket. The fiberglass material of the oven door gasket cannot withstand abrasion.
  It is essential for the gasket to remain intact. If you notice it becoming worn or frayed, replace it.
- Wipe up any heavy spillovers on the oven bottom.
- Make sure that the oven light bulb cover is in place and the oven light is off.

Setting Self Clean

(For model: LRG3085/LRG3083/LSRG307)

The Self- Clean function has cycle times of 2, 3, or 4 hours.

Self Clean Soil Guide

Soil Level	Cycle Setting
Lightly Soiled Oven Cavity	2 Hour Self Clean
Moderately Soiled Oven Cavity	3 Hour Self Clean
Heavily Soiled Oven Cavity	4 Hour Self Clean

1. Remove all racks and accessories from the oven.
2. Press the **Self Clean** button. The oven defaults to the recommended three hour self clean for a moderately soiled oven. Press twice for a two hour self clean or three times for a four hour self clean.
3. Press **START.**
4. Once the Self Clean is set, the oven door will lock automatically and the lock icon will display. You will not be able to open the oven door until the oven has cooled. The lock will release automatically when the oven has cooled.

CAUTION

DO NOT force the oven door open when the lock icon is displayed. The oven door will remained locked until the oven temperature has cooled. Forcing the door open will damage the door.

Setting Self Clean (Continued)

(For model: LRG3081 / LRG3091 / LRG3021)

1 Press the **Self Clean** button once for a 3 hour cycle, twice for a 4 hour cycle or three times for a 2 hour cycle. A 3-hour self-clean is recommended for use when cleaning small, contained spills. A SELF CLEAN time of 4 hours is recommended for heavily soiled ovens.

2 Press the **START** button.

3 When the **DOOR LOCKED** light is off, the door will unlock automatically.

- The words **DOOR LOCKED** will flash and the oven control will signal if you set the clean cycle and forget to close the oven door.
- To stop a clean cycle, press the **CLEAR OFF** button. When the **DOOR LOCKED** light goes off indicating the oven has cooled below the locking temperature, open the door.

Setting Self Clean with a Delayed Start

(For model: LRG3085/LRG3083/LSRG307)

1 Remove all racks and accessories from the oven.

2 Press the **Self Clean** button. The oven defaults to the recommended three hour self clean for a moderately soiled oven. Press twice for a two hour self clean or three times for a four hour self clean.

3 Press the **Start Time** button.

4 Use the number buttons to enter the time of day you would like the Self Clean to start.

5 Press the **START** button.

During Self Clean

- The self clean cycle uses extremely hot temperatures to clean the oven cavity. While running the Self Clean cycle, you may notice smoking or an odor. This is normal; especially if the oven is heavily soiled.
- As the oven heats, you may hear sounds of metal parts expanding and contracting. This is normal and will not damage the oven.
- Do not force the oven door open when DOOR LOCKED is displayed. The oven door will remained locked until the oven temperature has cooled. Forcing the door open will damage the door.

NOTE

- The Self Clean cycle cannot be started if the Lockout feature is active.
- Once the Self Clean cycle is set, the oven door will lock automatically. You will not be able to open the oven door until the oven has cooled. The lock will release automatically.
- Once the door has been locked, the DOOR LOCKED indicator light will stop flashing and remain on. Allow about 15 seconds for the oven door lock to activate.

After the Self Clean Cycle

- The oven door will remain locked until the oven temperature has cooled.
- You may notice some white ash in the oven. Wipe it off with a damp cloth or a soap-filled steel wool pad after the oven cools. If the oven is not clean after one clean cycle, repeat the cycle.
- If oven racks were left in the oven and do not slide smoothly after a clean cycle, wipe racks and rack supports with a small amount of vegetable oil to make them glide more easily.
- Fine lines may appear in the porcelain because it went through heating and cooling. This is normal and will not affect performance.

EasyClean™ (FOR SOME MODELS)

LG's EasyClean™ enamel in your new oven provides flexibility while cleaning the inside of your range. The EasyClean™ feature works with LG's new enamel to help lift LIGHT soils such as drops of cheese from pizzas or LIGHT grease splatter from small roasts without harsh chemicals for safer and faster hand-cleaning.

While traditional enamel surfaces require harsh chemicals to clean, EasyClean™ uses ONLY WATER and runs for just 20 minutes in low temperatures to help loosen LIGHT soils before hand-cleaning. Compared to the more intense Self Clean process, your LG oven will help you clean with LESS HEAT, LESS TIME, and virtually NO SMOKE OR FUMES.

When needed, your range still provides the Self Clean option for longer, more thorough oven cleaning for heavier, built up soils.

BENEFITS OF EasyClean™

- Helps **loosen light soils** before hand-cleaning
- EasyClean™ only uses water; no chemical cleaners
- Makes for a better Self Clean experience
  - Delays the need for a Self Clean cycle
  - Minimizes smoke and odors
  - Can allow shorter Self Clean time

LG's new oven with EasyClean™ enamel technology gives the user two cleaning options for different types of soils. While EasyClean™ is quick and effective for small and light soils, the Self Clean feature can be used to remove heavy built-up soils. Due to the intensity of the Self Clean cycle, there may be smoke and will require opening up windows as a result of high heat.

Common Food Items That Can Soil Your Oven	Types of Soils	Soil Pattern	Example of Oven Soiling	Suggested Cleaning Method
Pizza	Cheese or other ingredients	Small drops or spots	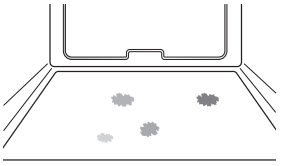	EasyClean™
Steaks, broiled	Fat / grease	Light splatter		
Fish, broiled				
Meat roasts at low temperatures				
Meat roasts at high temperatures		Medium to Heavy splatter	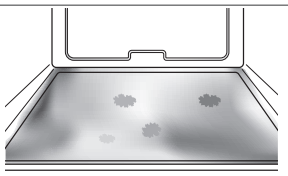	*Self Clean
Pies	Filling or sugar-based soils	Drops or spots		
Casseroles	Cream or tomato sauce			

* The Self Clean cycle can be used for soil that has been built up over time.

Cleaning Tips

- Allow the oven to cool to room temperature before using the EasyClean™ cycle. If your oven cavity is above 150°F (65°C), **"OVEN IS HOT- - PLEASE WAIT"** will appear in the display, and the EasyClean™ cycle will not be activated until the oven cavity cools down.
- A plastic spatula can be used as a scraper to scrape off any chunks or debris before and during cleaning the oven.
- Using the rough side of a non-scratch scouring pad may help to take off the burnt-on stains better than a soft sponge or towel.
- Certain non-scratch scrubbing sponges, such as those made of melamine foam, available at your local stores can also help improve cleaning.
- The range should be level to ensure that the entire surface of the bottom of the oven cavity is covered by water at the beginning of the EasyClean™ cycle.
- For best results, use distilled or filtered water. Tap water may leave mineral deposits on the oven bottom.
- Soil baked on through several cooking cycles will be more difficult to remove with the EasyClean™ cycle.
- Do not open the oven door during the EasyClean™ cycle. Water will not get hot enough if the door is opened during the cycle.
- For hard to reach areas such as the back surface of the lower oven, it is better to use the SelfClean cycle.

EasyClean™ INSTRUCTION GUIDE

STEP	EasyClean™ INSTRUCTION GUIDE	NOTES
1	**Remove oven racks and accessories** from the oven.	
2	**Scrape off any burnt-on debris** with a plastic scraper. Suggested plastic scrapers: • Hard plastic spatula • Plastic pan scraper • Plastic paint scraper • Old credit card	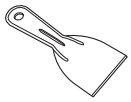
3	**Using a spray bottle, spray 1/4 cup (2oz) of water to fully saturate the walls and soils in the corners of the oven. Then spray (or pour if spraying is difficult) another 1 cup (8oz) of warm water onto the bottom center of the oven cavity.** The indentation on the oven bottom should be fully covered to submerge all soils. Additional water spray may be used as necessary. NOTE : DO NOT SPRAY WATER DIRECTLY ON THE DOOR. DOING SO WILL RESULT IN WATER DRIPPING TO THE FLOOR.	**Use the "mist" setting on the spray bottle for better** coverage. The entire 1 1/4 cup (10oz) of water should be used for each oven cavity.
4	Close the oven door and press EasyClean™, and then press Start.	
5	A tone will sound at the end of the 20-minute cycle. Press the CLEAR OFF button to clear the display and tone.	
6	Place a towel in front of the oven, underneath the lower oven door, to capture any water that may spill out during cleaning.	
7	Clean the oven cavity immediately after the EasyClean™ cycle by scrubbing with a **wet, non-scratch scouring sponge** or pad (the scouring side will not scratch the finish). Some water may spill into the bottom vents while cleaning, but it will be captured in a pan under the oven cavity and will not hurt the burner. NOTE: DO NOT USE ANY STEEL SCOURING PADS, ABRASIVE PADS OR CLEANERS as these materials can permanently damage the oven surface.	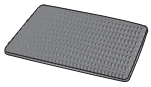
8	Once the oven cavity is cleaned, wipe any excess water with a clean dry towel. Replace racks and any other accessories.	
9	If some light soils remain, repeat the above steps, making sure to thoroughly soak the soiled areas. **If stubborn soils remain after multiple EasyClean™ cycles, run the Self Clean cycle.** Be sure that the oven cavity is empty of oven racks and other accessories, and that the oven cavity surface is dry before running the Self Clean cycle. Consult the Self Clean section of your owner's manual for further details.	

CAUTION

- Some surfaces may be hot after the EasyClean™ cycle. Wear rubber gloves while cleaning to prevent burns.
- During the EasyClean™ cycle, the oven bottom becomes hot enough to cause burns. Wait until the cycle is over before wiping the inside surface of the oven. Failure to do so may result in burns.
- Avoid leaning or resting on the oven door glass while cleaning the oven cavity.

NOTE

- If you forget to saturate the inside of the oven with water before starting EasyClean™, press the CLEAR OFF button to end the cycle. Wait for the range to cool to room temperature and then spray or pour water into the oven and start another EasyClean™ cycle.
- The cavity gasket may be wet when the EasyClean™ cycle finishes. This is normal. Do not clean the gasket.
- If mineral deposits remain on the oven bottom after cleaning, use a cloth or sponge soaked in vinegar to remove them.

Changing the Oven Light

The oven light is a standard 40-watt appliance bulb. It will turn on when the oven door is open. When the oven door is closed, press the **Oven Light** button to turn the light on or off.

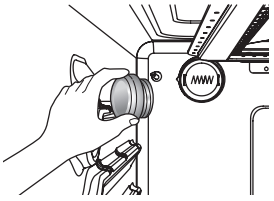

To replace the oven light

1 Unplug the range or disconnect the power.

2 Turn the glass bulb cover in the back of the oven counterclockwise to remove it.

3 Turn the bulb counterclockwise to remove it from the socket.

4 Insert the new bulb and turn it clockwise.

5 Insert the glass bulb cover and turn it clockwise.

6 Plug in the range or reconnect the power.

WARNING

- Make sure that the oven and bulb are cool.
- DISCONNECT the electrical power to the range at the main fuse or circuit breaker panel. Failure to do so can result in severe personal injury, death, or electrical shock.

Oven Racks

Remove the oven racks before operating the self clean cycle.

1 Food spilled into the tracks could cause the racks to become stuck. Clean with a mild, abrasive cleaner.

2 Rinse with clean water and dry.

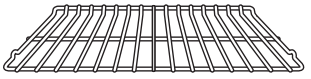

NOTE

If the racks are cleaned using the self clean cycle (not recommended), the color will turn slightly blue and the finish will become dull. After the self clean cycle is complete, and the oven has cooled, rub the sides of the racks with wax paper or a cloth containing a small amount of vegetable oil. This will make the racks glide more easily into the rack tracks.

BEFORE REQUESTING SERVICE

Symptoms and Questions	Possible Cause/Solution
Top burners do not light or do not burn evenly	• The plug on the range is not completely inserted in the electrical outlet. • Make sure the electrical plug is inserted into a live, properly grounded outlet. • Burner slits on the side of the burner may be clogged. • Remove the burners and clean them. Check the electrode area for burned-on food or grease. See the “CARE AND CLEANING” section. • Improper burner assembly. • Make sure the burner parts are installed correctly. See the “CARE AND CLEANING” section.
Burner flames very large or yellow	• Improper air to gas proportion. • If range is connected to LP gas, contact the technician who installed your range or made the conversion. • The flames on the surface burners may burn yellow in the presence of high humidity, such as a rainy day or a nearby humidifier.
Surface burners light but the oven does not	• The oven gas shut-off valve may have accidentally been moved during cleaning or moving. • Make sure that the oven gas shut-off valve is fully open.
Food does not bake or roast properly	• Improper oven controls setting. • See the “HOW TO USE” section. • Incorrect rack position. • See the “HOW TO USE” section. • Incorrect cookware or cookware of improper size being used. • See the “HOW TO USE” section. • Oven thermostat needs adjustment. • See the “TEMPERATURE SETTINGS“ section. • Clock not set correctly. • See the “CLOCK“ and “TIMER“ sections. • Aluminum foil used improperly in the oven. • See the “CARE AND CLEANING” section.
Food does not broil properly in the oven	• Improper oven controls setting. • Make sure you press the **Broil** button. • Oven door not closed. • See the “HOW TO USE” section. • Incorrect rack position. • See the “BROILING CHART”. • Food being cooked in a hot pan. • Use the broiling pan and grid that came with your range. Make sure it is cool. • Cookware not suited for broiling. • Use the broiling pan and grid that came with your range. • Aluminum foil used on the broiling pan and grid has not been fitted properly and slit as recommended. • See the “HOW TO USE” section.
Oven temperature too hot or too cold	• Oven thermostat needs adjustment. • See the “TEMPERATURE SETTINGS” section.
Clock and timer does not work	• The plug on range is not completely inserted in the electrical outlet. • Make sure the electrical plug is inserted into a live, properly grounded outlet. • A fuse in your home may be blown or the circuit breaker tripped. • Replace the fuse or reset the circuit breaker. • Improper oven controls setting. • See the “CLOCK“ and “TIMER” sections.

Symptoms and Questions	Possible Cause/Solution
Oven light does not work	• The light bulb is loose or defective. • Tighten or replace the bulb. • The plug on the range is not completely inserted in the electrical outlet. • Make sure the electrical plug is inserted into a live, properly grounded outlet.
Oven will not self-clean	• The oven temperature is too high to set a self-clean operation. • Allow the range to cool to room temperature and reset the controls. • Improper oven controls setting. • See the "SELF CLEAN" section.
"Crackling" or "popping" sound	• This is the sound of the metal heating and cooling during both the cooking and cleaning functions. • This is normal.
Too much smoking during a self clean cycle.	• Too much soil. • Press the **CLEAR OFF** button. Open the windows to clear the smoke from the room. Wait until the **DOOR LOCKED** light goes off. Wipe up the excess soil and reset the clean cycle.
Oven door will not open after a self-clean cycle	• The oven temperature is too high. • Allow the oven to cool below locking temperature. • This can take up to 1 hr after the cycle is complete.
Oven not clean after a self-clean cycle	• Improper oven controls setting. • See the "SELF CLEAN" section. • The oven was heavily soiled. • Clean up heavy spillovers before beginning the self- clean cycle. Heavily soiled ovens may need to self-clean again or for a longer period of time.
"CLOSE DOOR TO CONTINUE BROILING" or "DOOR OPENED" appears in the display	• The broil or self-clean cycle has been selected but the door is not closed. • Close the oven door.
"DOOR LOCKED" light is on when you want to cook	• The oven door is locked because the temperature inside the oven has not dropped below the locking temperature. • Press the **CLEAR OFF** button. Allow the oven to cool.
Oven control beeps and displays any F code error.	• You have "F6". • Press the **CLEAR OFF** button. Allow the oven to cool for one hour. Put the oven back into operation. • You have "F9". • Check the main gas shut-off valve or the oven gas shut-off valve(see "Surface burners light but oven burner does not" column). • If the function code repeats. • Disconnect all power to the range for 5 minutes and then reconnect power. If the function error code repeats, call for service.
Oven racks are difficult to slide	• The oven racks were cleaned in a self-clean cycle. • Apply a small amount of vegetable oil to a paper towel and wipe the edges of the oven racks with the paper towel. Do not use lubricant sprays.
Power outage, clock flashes	• Power outage or surge. • Reset the clock. If the oven was in use, you must reset it by pressing the **CLEAR OFF** button, setting the clock and resetting any cooking function.
"Burning" or "oily" odor emitting from the vent	• This is normal in a new oven and will disappear in time. • To speed the process, set a self-clean cycle for a minimum of 2 hours. See the "SELF CLEAN" section.

Symptoms and Questions	Possible Cause/Solution
Strong odor	• An odor from the insulation around the inside of the oven is normal for the first few times the oven is used. • This is temporary.
Fan noise	• The convection fan may turn on and off automatically. • This is normal. The convection fan will shut off if the door is opened.
Convection fan not working (convection models)	• Preheat temperature not reached. • Fan will start automatically once the preheat temperature is reached. • Operates opposite the heating cycle. • This is normal.
Drawer does not slide smoothly or drags	• The drawer is out of alignment. • Fully extend the drawer and push it all the way in. CARE AND CLEANING section. • Drawer is over-loaded or load is unbalanced. • Reduce weight. Redistribute drawer contents.

WARRANTY (ONLY USA)

LG Electronics Inc. will repair or replace your product, at LG's option, if it proves to be defective in material or workmanship under normal use, during the warranty period set forth below, effective from the date of original consumer purchase of the product. This limited warranty is good only to the original purchaser of the product and effective only when used in the U.S.A.

WARRANTY PERIOD	HOW SERVICE IS HANDLED
One Year From the date of the original purchase.	**Any part** of the oven that fails due to a defect in materials or workmanship. During this **full one-year warranty**, LG will also provide, **free of charge**, all labour and in-home service to replace the defective part.

THIS WARRANTY IS IN LIEU OF ANY OTHER WARRANTIES, EXPRESS OR IMPLIED, INCLUDING WITHOUT LIMITATION, ANY WARRANTY OF MERCHANTABILITY OR FITNESS FOR A PARTICULAR PURPOSE. TO THE EXTENT ANY IMPLIED WARRANTY IS REQUIRED BY LAW, IT IS LIMITED IN DURATION TO THE EXPRESS WARRANTY PERIOD ABOVE. LG WILL NOT BE LIABLE FOR ANY CONSEQUENTIAL, INDIRECT, OR INCIDENTAL DAMAGES OF ANY KIND, INCLUDING LOST REVENUES OR PROFITS, IN CONNECTION WITH THE PRODUCT. SOME STATES DO NOT ALLOW LIMITATION ON HOW LONG AN IMPLIED WARRANTY LASTS OR THE EXCLUSION OF INCIDENTAL OR CONSEQUENTIAL DAMAGES, SO THE ABOVE LIMITATIONS OR EXCLUSIONS MAY NOT APPLY TO YOU.

THIS LIMITED WARRANTY DOES NOT APPLY TO:

1. Service calls to correct the installation of your appliance, to instruct you how to use your appliance, to replace house fuses or correct house wiring, or to replace owner-accessible light bulbs.
2. Repairs when your appliance is used in other than normal, single-family household use.
3. Pickup and delivery. Your appliance is designed to be repairable in the home.
4. Damage resulting from accident, alteration, misuse, abuse, fire, flood, improper installation, acts of God, or use of products not approved by LG Corporation.
5. Repairs to parts or systems resulting from unauthorized modifications made to the appliance.
6. Replacement parts or repair labour costs for units operated outside the United States.
7. Any labour costs during the limited warranty period.

This warranty is extended to the original purchaser for products purchased for home use within the U.S.A. In Alaska, the warranty excludes the cost of shipping or service calls to your home.
Some states do not allow the exclusion or limitation of incidental or consequential damages, so this exclusion or limitation may not apply to you. This warranty gives you specific legal rights, and you may also have other rights which vary from state to state. To know what your legal rights are, consult your local or state consumer affairs or your state's Attorney General.

CUSTOMER ASSISTANCE INFORMATION:

To Prove Warranty Coverage	**Retain your Sales Receipt to prove date of purchase.** A copy of your Sales Receipt must be submitted at the time warranty service is provided.
To Obtain the Nearest Authorized Service Center or Sales Dealer, or to Obtain Product, Customer, or Service Assistance	**Call 1-800-243-0000** (Phone answered 24 hours - 365 days a year) and choose the appropriate prompt from the menu; or visit our website at: **http://www.lg.com**

LG
Life's Good

LG Customer Information Center	
1-800-243-0000	USA, Consumer User
1-888-542-2623	CANADA
507-260-0000	PANAMA
Register your product Online!	
www.lg.com	

Printed in Mexico