LA Z BOY®
OUTDOOR

Live life comfortably.™

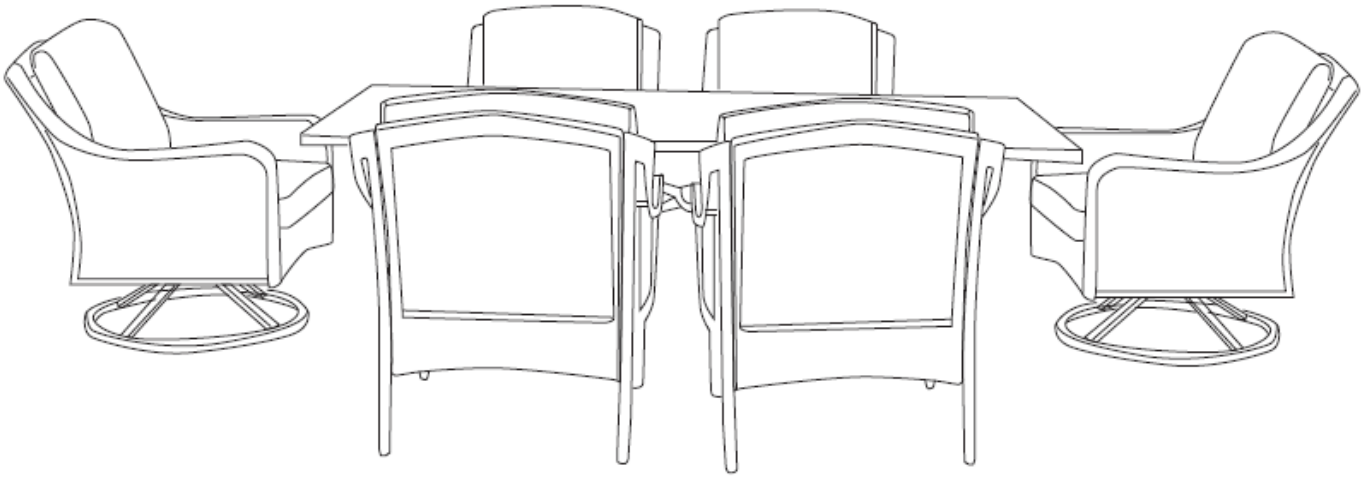

USE AND CARE GUIDE

Sears Madeline 7pc Dining Set – Red

* Stationary Dining Chair

Product Code: D71 M 20922

UPC Code: 7 22938 11290 6

Date of Purchase: __ / __ / __

La-Z-Boy® is a registered trademark of La-Z-Boy Incorporated and is used under license to BJI, Inc.

© 2015 La-Z-Boy Incorporated.

Thank you for your purchase

THANK YOU FOR YOUR PURCHASE!

We are pleased that you have chosen Sears for your outdoor furniture purchase. We hope that you enjoy the unmatched quality, comfort, and style of your new patio set. Every piece is meticulously considered all the way down to the smallest details, exclusively for you, by our world class design team, We know you have a choice when it comes to your patio furniture needs, so from our team to yours, thank you for letting us be a part of your outdoors.

Table of Contents

Table of Contents..... 2

Safety Information 3

Warranty 3
- What is Covered 3
- What is Not Covered..... 3

Care and Maintenance..... 4

Pre-Assembly..... 5
- Planning Assembly 5
- Observe weight limits..... 5
- Tools required..... 5
- Hardware Included..... 5
- Package Contents..... 6

Assembly Instruction 7

Customer Service 10

Safety Information

SET UP YOUR FURNITURE PROPERLY

- Ensure that all parts are assembled properly and fully tightened as per the instructions.
- When placing in the desired location, ensure that all legs are resting on the same surface. You may adjust the legs levelers as required to ensure that the item stands in a rigid position.

EXAMINE YOUR FURNITURE

- Examine occasionally to ensure that there are no loose parts. If loose parts are found, they must be retightened fully before additional use.

Warranty

THIS IS A RESIDENTIAL WARRANTY AND DOES NOT APPLY FOR COMMERCIAL USE.

2 YEARS WARRANTY FOR FRAME, 1 YEAR WARRANTY FOR RESIN WICKER AND CUSHIONS

WHAT IS COVERED

We warrant the frame to be free of manufacturing defects to the original purchaser for 2 years.

WHAT IS NOT COVERED

It remains the customer’s responsibility for freight and packaging charges to and from our service center.

This warranty does not cover commercial use, hardware, acts of nature, fire, freezing and abusive use.

Discoloration or fading of the finish or fabrics as a result of chemicals or spills is not covered.

Glass table top breakage and corrosion or rusting of hardware are not covered.

In addition, purchase parts are not covered under this warranty.

Proof of purchase (dated register receipt) is required for warranty claims.

Warranty (continued)

We reserve the right to make substitutions with similar merchandise, if the model in question is no longer in production.

For a copy of our full limited warranty, please contact our customer service team below.

Contact the Customer Service Team at 1-866-391-4868 or visit www.Bjifurniture.com.

Care and Maintenance

- Do not allow water to build up in frames. This will cause corrosion and possible freezing damage in cold climates.
- Use a mild soap and water for normal cleaning. DO NOT use janitorial or alcohol based cleaners. Some cleaners may be marked as natural, but some ingredients can cause discoloration or have adverse reaction to your finish.
- Rinse with clean water and dry with a soft, absorbent cloth towel.
- Cushions, slings, and/or an umbrella may be cleaned by hand with a solution of soap and water with a clean water rinse. Never machine wash as this will result in shrinking or damage. After cleaning, tip on end and allow to drip dry. Never use a commercial or home dryer to tumble dry fabric goods.
- Treat frames with liquid wax for maximum protection against UV rays and /or salty, damp air.
- Umbrella should be closed when not in use. Umbrella should be removed and stored in the event of wind, rain, hail, sleet, snow, or any other inclement weather. To prevent damage to your table, always use an umbrella base with your umbrella. Store indoors during winter months.
- Use and operation: To prolong the life of your outdoor furniture, cover when not in use. Store indoors during winter months.

Pre-Assembly

PLANNING ASSEMBLY

PLEASE READ COMPLETE USE AND CARE GUIDE PRIOR TO ASSEMBLY!

Identify all parts packed in the carton against the parts list. Remove all protective materials and place the parts on a nonabrasive surface to avoid scratching. It takes about 45 minutes for three persons to complete all the assembly.

NOTE: More than one person may be required to complete the assembly of this product.

OBSERVE WEIGHT LIMITS

The recommended weight limit for each item is listed below:

- Swivel Rocker: 300lbs
- Dining Chair: 300lbs

TOOLS REQUIRED

Socket Wrench [included]

Hex Wrench [included]

HARDWARE INCLUDED

NOTE: Hardware not shown to actual size.

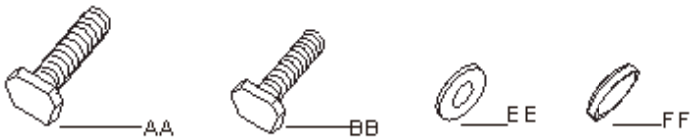

Part	Description	Quantity
AA	M6*40mm Hex Bolt	24
BB	M6*30mm Hex Bolt	16
EE	M6 Washer	40
FF	M6 Hex Bolt Cap	40

Pre-Assembly (continued)

PACKAGE CONTENTS

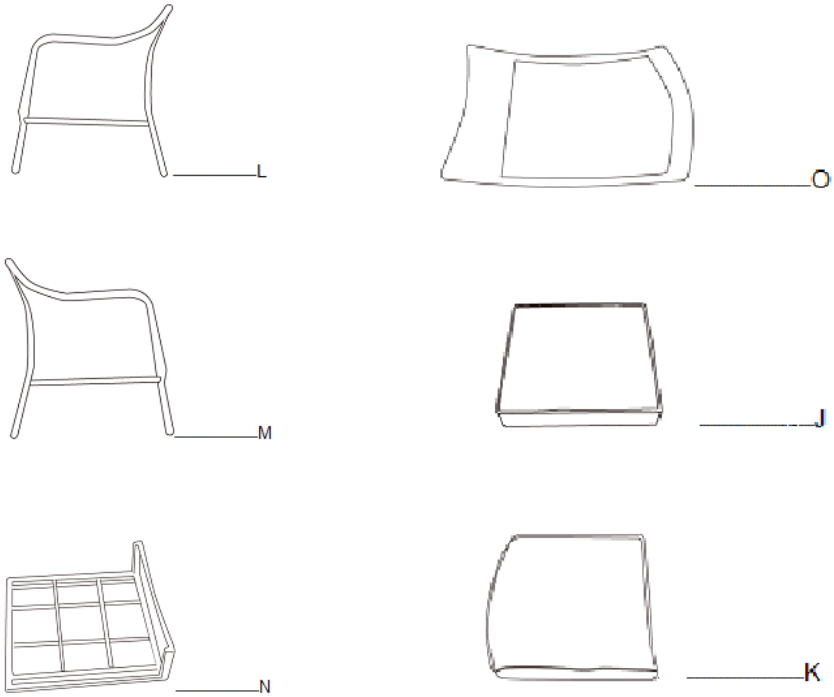

Part	Description	Quantity
L	Left Arm	4
M	Right Arm	4
N	Chair Seat	4
O	Chair Back	4
J	Seat Cushion	4
K	Back Cushion	4

Safety Information

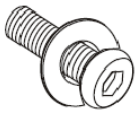

- EVERY BOLT NEEDS TO BE USED WITH A WASHER.
- DO NOT FULLY TIGHTEN BOLT UNTIL INDICATED IN **STEP 2**.

Assembly Instruction

1 Attaching the back

NOTE: Do not fully tighten the bolts.

- Attach the chair back (O) to the chair seat (N) using washers (EE) and hex bolts (AA).

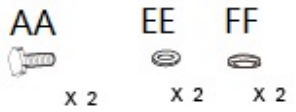

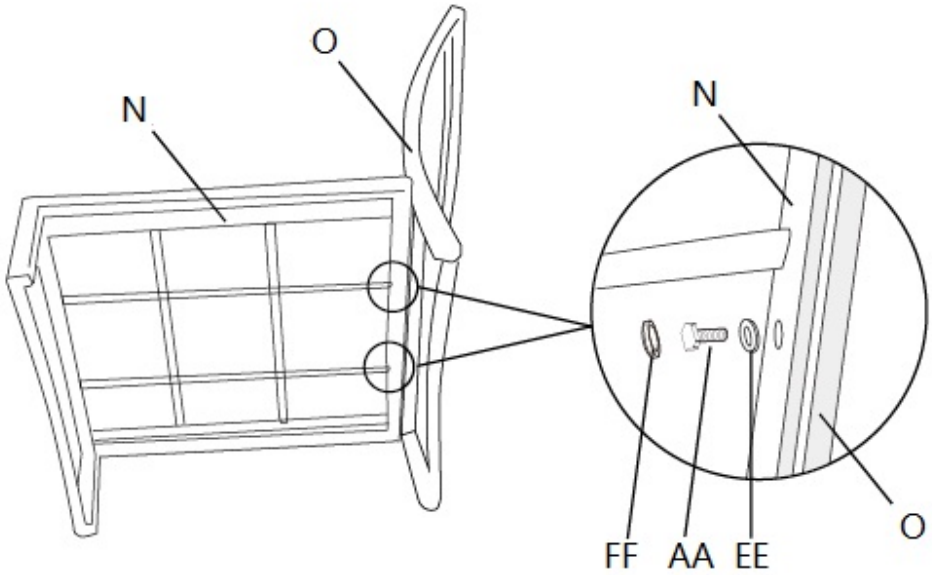

Assembly Instruction (continued)

2 Attaching the chair arms

- ◻ Attach the arms (L) & (M) to the chair seat (N) using washers (EE) and hex bolts (BB).
- ◻ Attach the arms (L) & (M) to the chair back (O) using washer (EE) and hex bolts (AA).
- ◻ Tighten all hex bolts (AA) & (BB) with the socket wrench.
- ◻ Attach the hex bolt caps (FF).

NOTE: Once all the bolts are in place tighten completely.

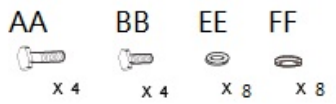

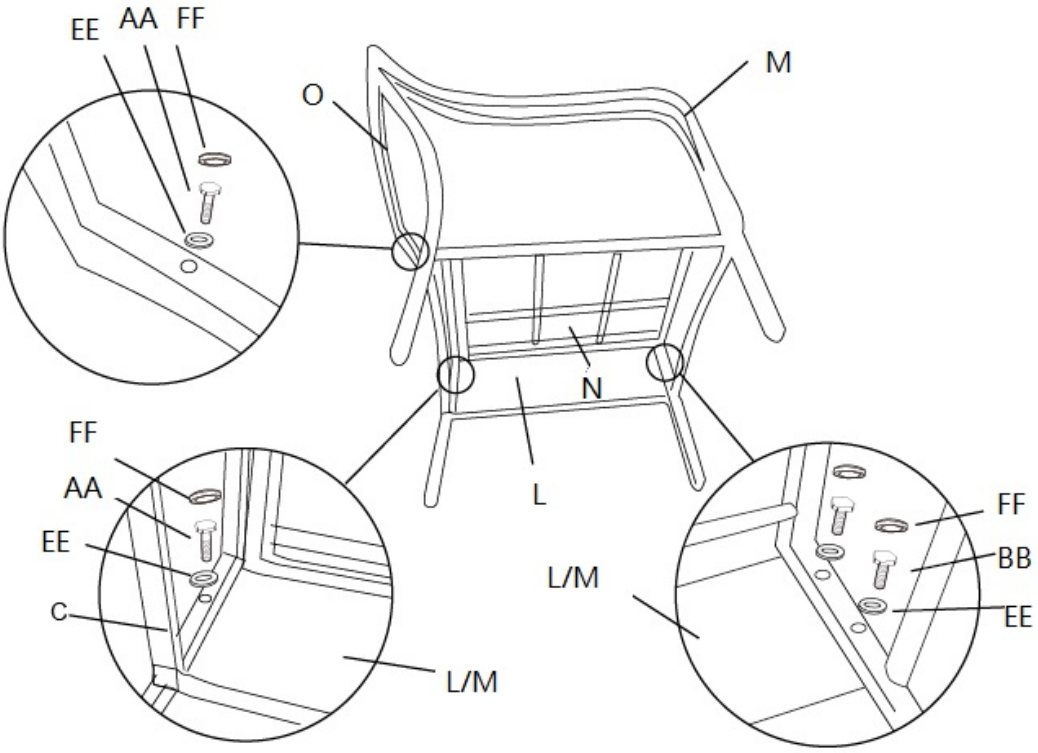

3 Adding the cushions

- Place the seat cushion (J) and back cushion (K) onto the chair.

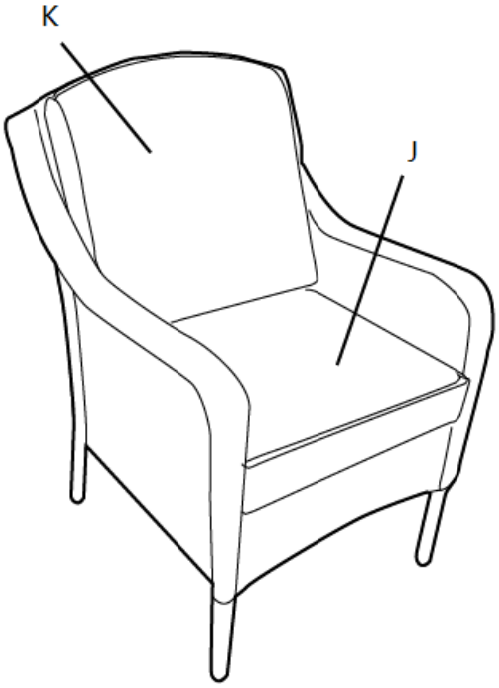

sears

Please refer to part number when reordering

Questions, problems, missing parts? Before returning to the store,
call our Customer Service
8 a.m. - 5 p.m., EST, Monday-Thursday
8 a.m. – 4 p.m., EST, Friday

1-866-391-4868

Made in/ Hecho en CHINA

Distributed by Sears, Roebuck and Co., Hoffman Estates, IL60179

See our extensive assortment of outdoor living products on-line

at www.sears.com and www.kmart.com

Retain this manual for future use.

LA Z BOY®
OUTDOOR

Live life comfortably.™

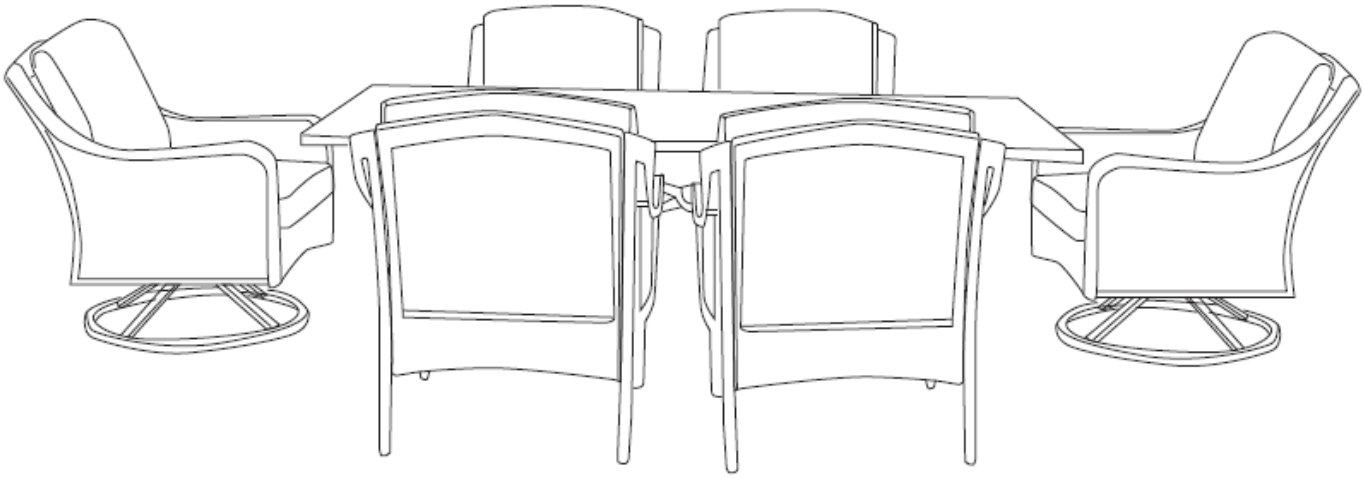

USE AND CARE GUIDE

Sears Madeline 7pc Dining Set – Red

* Swivel Rocker

Product Code: D71 M 20922

UPC Code: 7 22938 11290 6

Date of Purchase: __ / __ / __

La-Z-Boy® is a registered trademark of La-Z-Boy Incorporated and is used under license to BJI, Inc.

© 2015 La-Z-Boy Incorporated.

Thank you for your purchase

THANK YOU FOR YOUR PURCHASE!

We are pleased that you have chosen Sears for your outdoor furniture purchase. We hope that you enjoy the unmatched quality, comfort, and style of your new patio set. Every piece is meticulously considered all the way down to the smallest details, exclusively for you, by our world class design team. We know you have a choice when it comes to your patio furniture needs, so from our team to yours, thank you for letting us be a part of your outdoors.

Table of Contents

Table of Contents..... 2

Safety Information 3

Warranty 3
- What is Covered 3
- What is Not Covered..... 3

Care and Maintenance..... 4

Pre-Assembly..... 5
- Planning Assembly 5
- Observe weight limits..... 5
- Tools required..... 5
- Hardware Included..... 5
- Package Contents..... 6

Assembly Instruction 7

Customer Service 12

Safety Information

SET UP YOUR FURNITURE PROPERLY

- Ensure that all parts are assembled properly and fully tightened as per the instructions.
- When placing in the desired location, ensure that all legs are resting on the same surface. You may adjust the legs levelers as required to ensure that the item stands in a rigid position.

EXAMINE YOUR FURNITURE

- Examine occasionally to ensure that there are no loose parts. If loose parts are found, they must be retightened fully before additional use.
-

Warranty

THIS IS A RESIDENTIAL WARRANTY AND DOES NOT APPLY FOR COMMERCIAL USE.

2 YEARS WARRANTY FOR FRAME, 1 YEAR WARRANTY FOR RESIN WICKER AND CUSHIONS

WHAT IS COVERED

We warrant the frame to be free of manufacturing defects to the original purchaser for 2 years.

WHAT IS NOT COVERED

It remains the customer’s responsibility for freight and packaging charges to and from our service center.

This warranty does not cover commercial use, hardware, acts of nature, fire, freezing and abusive use.

Discoloration or fading of the finish or fabrics as a result of chemicals or spills is not covered.

Glass table top breakage and corrosion or rusting of hardware are not covered.

In addition, purchase parts are not covered under this warranty.

Proof of purchase (dated register receipt) is required for warranty claims.

Warranty (continued)

We reserve the right to make substitutions with similar merchandise, if the model in question is no longer in production.

For a copy of our full limited warranty, please contact our customer service team below.

Contact the Customer Service Team at 1-866-391-4868 or visit www.Bjifurniture.com.

Care and Maintenance

- Do not allow water to build up in frames. This will cause corrosion and possible freezing damage in cold climates.
- Use a mild soap and water for normal cleaning. DO NOT use janitorial or alcohol based cleaners. Some cleaners may be marked as natural, but some ingredients can cause discoloration or have adverse reaction to your finish.
- Rinse with clean water and dry with a soft, absorbent cloth towel.
- Cushions, slings, and/or an umbrella may be cleaned by hand with a solution of soap and water with a clean water rinse. Never machine wash as this will result in shrinking or damage. After cleaning, tip on end and allow to drip dry. Never use a commercial or home dryer to tumble dry fabric goods.
- Treat frames with liquid wax for maximum protection against UV rays and /or salty, damp air.
- Umbrella should be closed when not in use. Umbrella should be removed and stored in the event of wind, rain, hail, sleet, snow, or any other inclement weather. To prevent damage to your table, always use an umbrella base with your umbrella. Store indoors during winter months.
- Use and operation: To prolong the life of your outdoor furniture, cover when not in use. Store indoors during winter months.

Pre-Assembly

PLANNING ASSEMBLY

PLEASE READ COMPLETE USE AND CARE GUIDE PRIOR TO ASSEMBLY!

Identify all parts packed in the carton against the parts list. Remove all protective materials and place the parts on a nonabrasive surface to avoid scratching. It takes about 45 minutes for three persons to complete all the assembly.

NOTE: More than one person may be required to complete the assembly of this product.

OBSERVE WEIGHT LIMITS

The recommended weight limit for each item is listed below:

- Swivel Rocker: 300lbs
- Dining Chair: 300lbs

TOOLS REQUIRED

Socket Wrench [included]

Hex Wrench [included]

HARDWARE INCLUDED

NOTE: Hardware not shown to actual size.

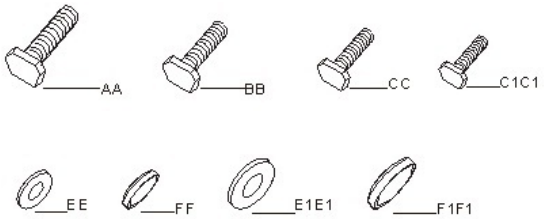

Part	Description	Quantity
AA	M6*40mm Hex Bolt	12
BB	M6*30mm Hex Bolt	8
CC	M6*20mm Hex Bolt	4
C1C1	M8*20mm Hex Bolt	4
EE	M6 Washer	24
E1E1	M8 Washer	4
FF	M6 Hex Bolt Cap	24
F1F1	M8 Hex Bolt Cap	4

Pre-Assembly (continued)

PACKAGE CONTENTS

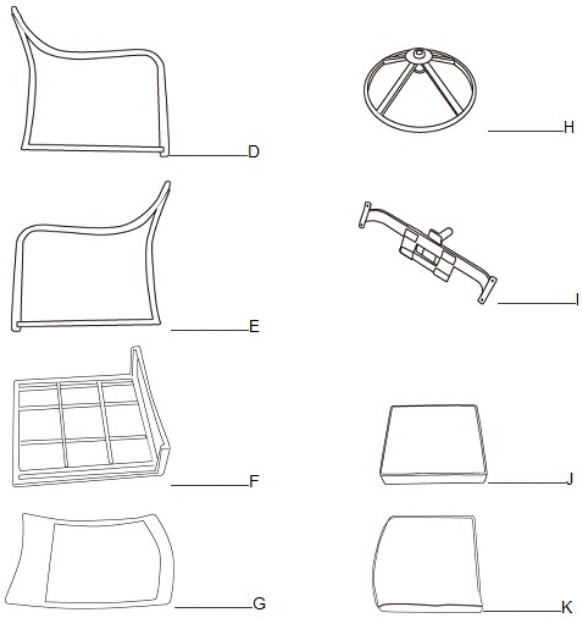

Part	Description	Quantity
D	Left Arm	2
E	Right Arm	2
F	Chair Seat	2
G	Chair Back	2
H	Chair Swivel Base	2
I	Stem Bracket	2
J	Seat Cushion	2
K	Back Cushion	2

Safety Information

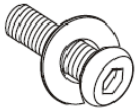

- EVERY BOLT NEEDS TO BE USED WITH A WASHER.
- DO NOT FULLY TIGHTEN BOLT UNTIL INDICATED IN **STEP 3**.

4 Attaching the stem bracket

NOTE: Do not fully tighten the bolts.

- Attach the stem bracket (I) to the chair seat (F) using washers (EE) & (E1E1) and hex bolts (CC) & (C1C1).

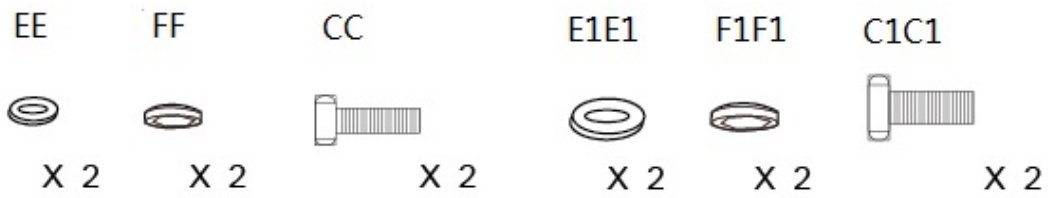

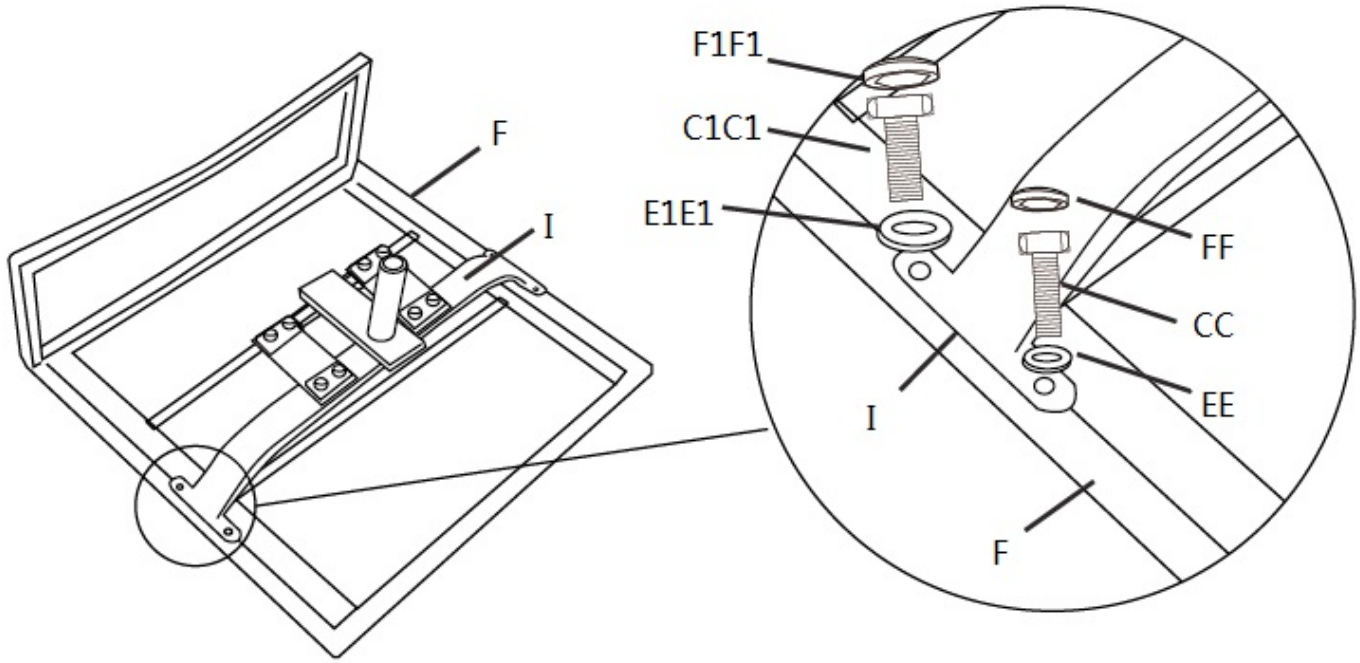

5 Attaching the chair back

NOTE: Do not fully tighten the bolts.

□ Attach the chair back (G) to the chair seat (F) using washers (EE) and hex bolts (AA).

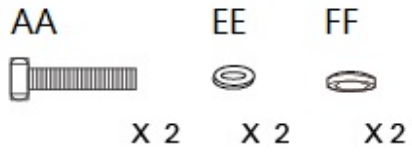

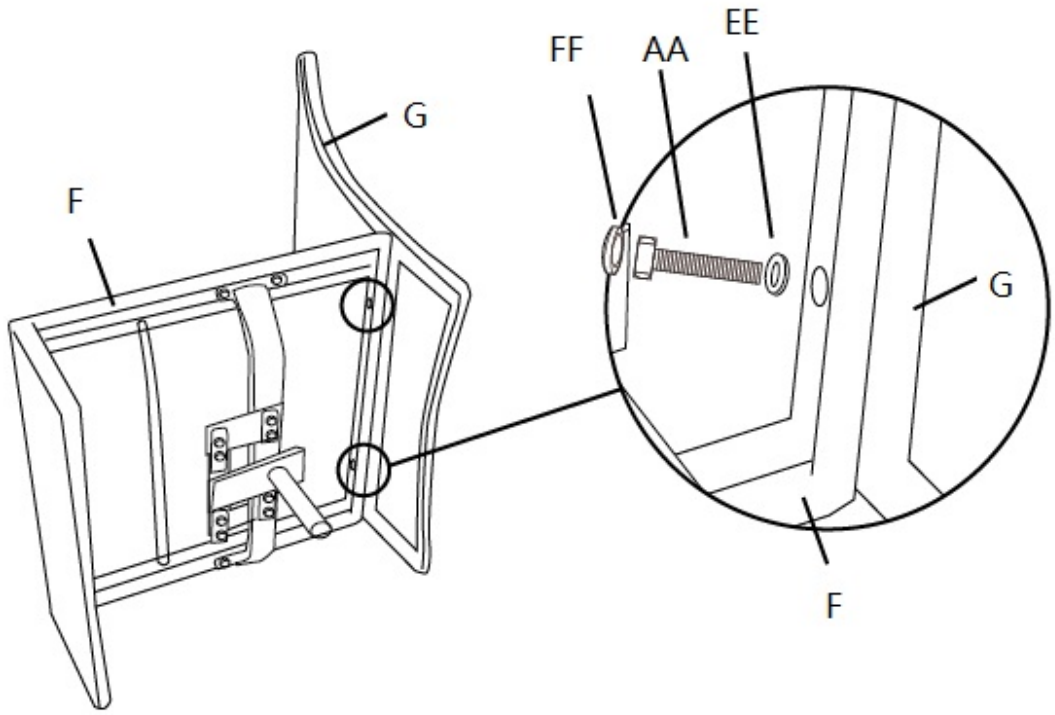

Assembly Instruction (continued)

6 Attaching the chair arms

- ◻ Attach the arms (D) & (E) to the chair seat (F) using washers (EE) and hex bolts (BB).
- ◻ Attach the arms (D) & (E) to the chair back (G) using washer (EE) and hex bolts (AA).
- ◻ Tighten all hex bolts (AA), (BB), (CC) & (C1C1) with the socket wrench and hex wrench.
- ◻ Attach the hex bolt caps (FF) & (F1F1).

NOTE: Once all the bolts are in place tighten completely.

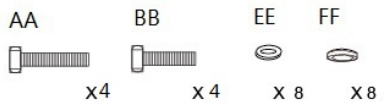

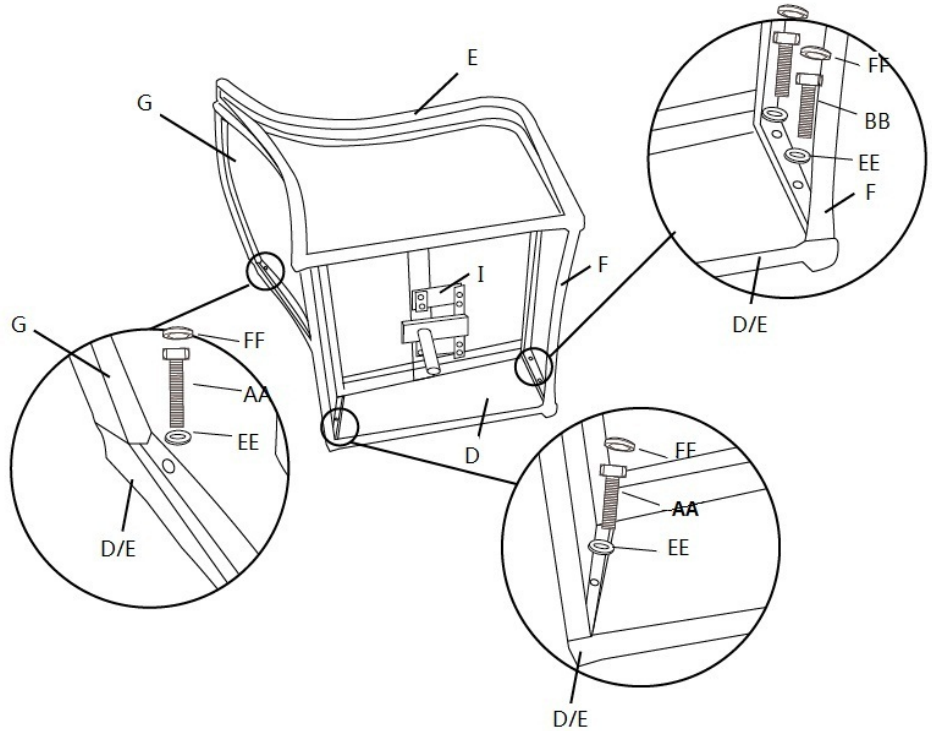

7 Inserting the chair bucket

- Place the chair base (H) on a flat surface and align the stem under the seat frame with the hole on the base. Make sure the seat bottoms out in the base for safety.

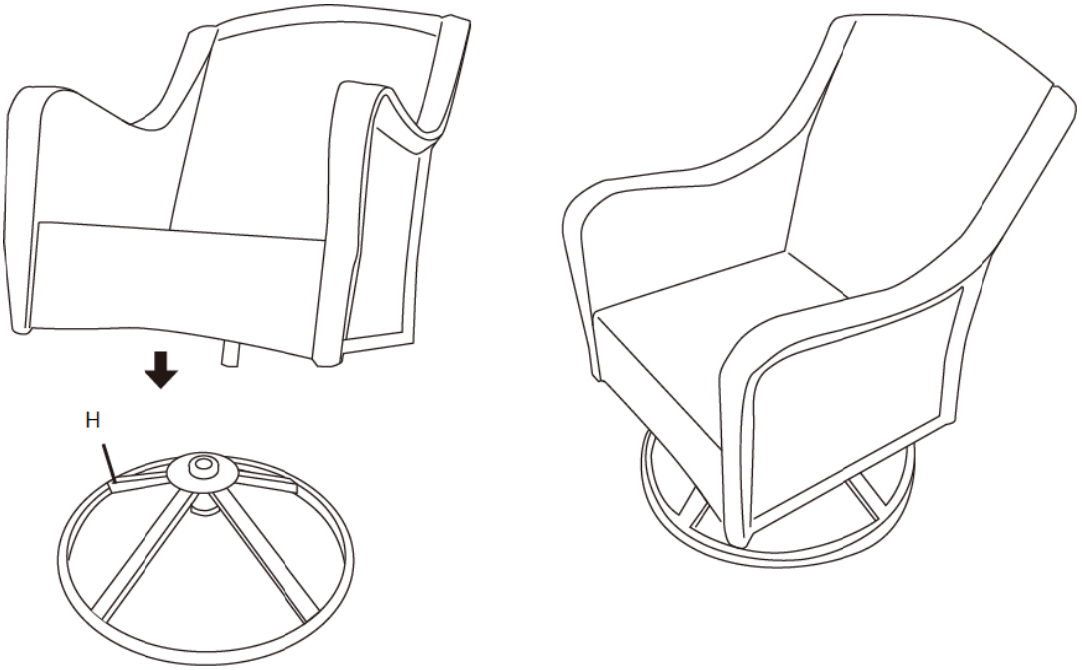

8 Adding the cushions

- Place the seat cushion (J) and back cushion (K) onto the chair.

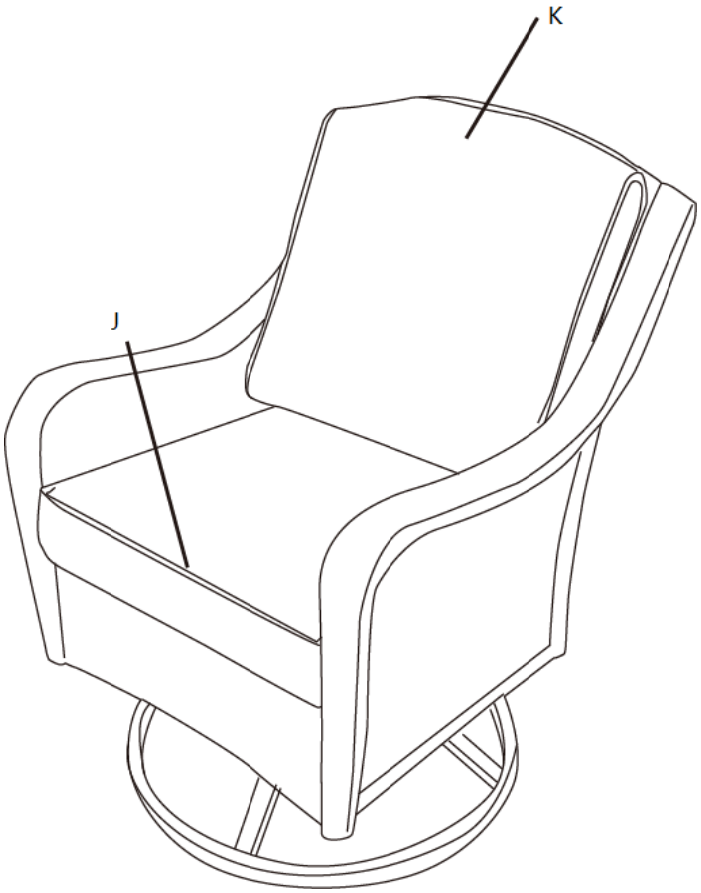

sears

Please refer to part number when reordering

Questions, problems, missing parts? Before returning to the store,
call our Customer Service
8 a.m. - 5 p.m., EST, Monday-Thursday
8 a.m. – 4 p.m., EST, Friday

1-866-391-4868

Made in/ Hecho en CHINA

Distributed by Sears, Roebuck and Co., Hoffman Estates, IL60179

See our extensive assortment of outdoor living products on-line

at www.sears.com and www.kmart.com

Retain this manual for future use.

LA-Z-BOY OUTDOOR

Live life comfortably.™

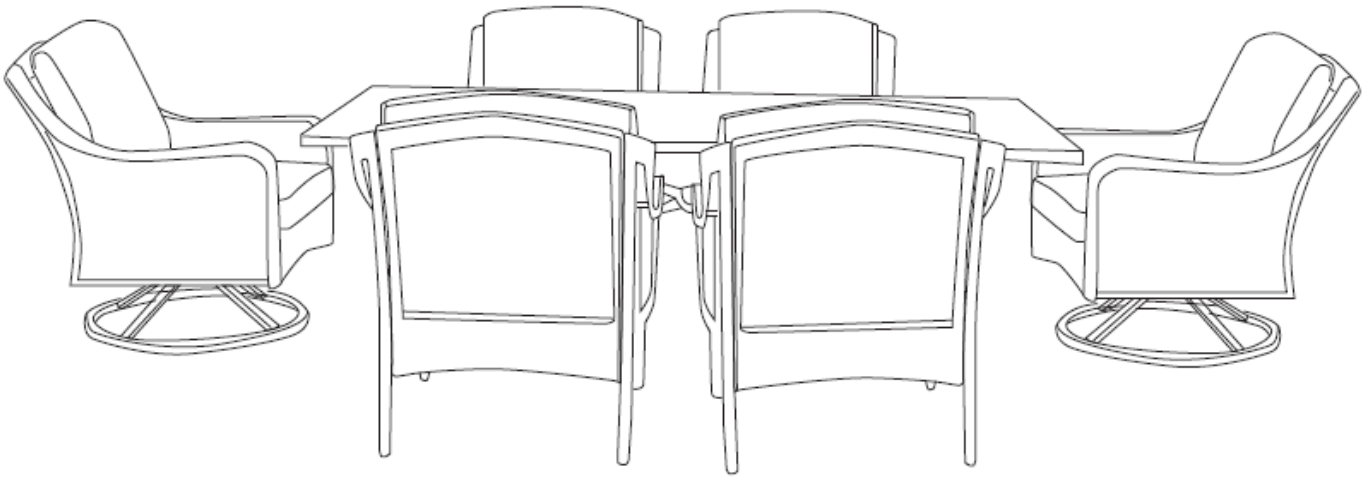

USE AND CARE GUIDE

Sears Madeline 7pc Dining Set – Red

* Dining Table

Product Code: D71 M 20922

UPC Code: 7 22938 11290 6

Date of Purchase: __ / __ / __

La-Z-Boy® is a registered trademark of La-Z-Boy Incorporated and is used under license to BJI, Inc.

© 2015 La-Z-Boy Incorporated.

Thank you for your purchase

THANK YOU FOR YOUR PURCHASE!

We are pleased that you have chosen Sears for your outdoor furniture purchase. We hope that you enjoy the unmatched quality, comfort, and style of your new patio set. Every piece is meticulously considered all the way down to the smallest details, exclusively for you, by our world class design team, We know you have a choice when it comes to your patio furniture needs, so from our team to yours, thank you for letting us be a part of your outdoors.

Table of Contents

Table of Contents..... 24

Safety Information 3
Set up your furniture properly..... 3
Examine your furniture..... 25

Warranty 25
What is Covered 25
What is Not Covered..... 25

Care and Maintenance..... 26

Pre-Assembly..... 27
Planning Assembly 27
Observe weight limits..... 27
Tools required..... 27
Hardware Included..... 27
Table Package Contents..... 28

Assembly Instruction 29

Customer Service 10

Safety Information

SET UP YOUR FURNITURE PROPERLY

- Ensure that all parts are assembled properly and fully tightened as per the instructions.
- When placing in the desired location, ensure that all legs are resting on the same surface. You may adjust the legs levelers as required to ensure that the item stands in a rigid position.

EXAMINE YOUR FURNITURE

- Examine occasionally to ensure that there are no loose parts. If loose parts are found, they must be retightened fully before additional use.

WARNING: Do not sit or stand on the table.

WARNING: Do not place heavy items on the table top.

WARNING: An umbrella base must be used at all times.
Umbrella should not be used in the event of wind, rain, hail, sleet, snow or any other inclement weather.

Warranty

THIS IS A RESIDENTIAL WARRANTY AND DOES NOT APPLY FOR COMMERCIAL USE.

2 YEARS WARRANTY FOR FRAME, 1 YEAR WARRANTY FOR RESIN WICKER AND CUSHIONS

WHAT IS COVERED

We warrant the frame to be free of manufacturing defects to the original purchaser for 2 years.

WHAT IS NOT COVERED

It remains the customer’s responsibility for freight and packaging charges to and from our service center.

This warranty does not cover commercial use, hardware, acts of nature, fire, freezing and abusive use.

Discoloration or fading of the finish or fabrics as a result of chemicals or spills is not covered.

Warranty (continued)

Glass table top breakage and corrosion or rusting of hardware are not covered.

In addition, purchase parts are not covered under this warranty.

Proof of purchase (dated register receipt) is required for warranty claims.

We reserve the right to make substitutions with similar merchandise, if the model in question is no longer in production.

For a copy of our full limited warranty, please contact our customer service team below.

Contact the Customer Service Team at 1-866-391-4868 or visit www.Bjifurniture.com.

Care and Maintenance

- Do not allow water to build up in frames. This will cause corrosion and possible freezing damage in cold climates.
- Use a mild soap and water for normal cleaning. DO NOT use janitorial or alcohol based cleaners. Some cleaners may be marked as natural, but some ingredients can cause discoloration or have adverse reaction to your finish.
- Rinse with clean water and dry with a soft, absorbent cloth towel.
- Cushions, slings, and/or an umbrella may be cleaned by hand with a solution of soap and water with a clean water rinse. Never machine wash as this will result in shrink or damage. After cleaning, tip on end and allow to drip dry. Never use a commercial or home dryer to tumble dry fabric goods.
- Treat frames with liquid wax for maximum protection against UV rays and /or salty, damp air.
- Umbrella should be closed when not in use. Umbrella should be removed and stored in the event of wind, rain, hail, sleet, snow, or any other inclement weather. To prevent damage to your table, always use an umbrella base with your umbrella. Store indoors during winter months.
- Use and operation: To prolong the life of your outdoor furniture, cover when not in use. Store indoors during winter months.

Pre-Assembly

PLANNING ASSEMBLY

PLEASE READ COMPLETE USE AND CARE GUIDE PRIOR TO ASSEMBLY!

Identify all parts packed in the carton against the parts list. Remove all protective materials and place the parts on a nonabrasive surface to avoid scratching. It takes about 45 minutes for three persons to complete all the assembly.

NOTE: More than one person may be required to complete the assembly of this product.

OBSERVE WEIGHT LIMITS

The recommended weight limit for each item is listed below:

- Swivel Rocker: 300lbs
- Dining Chair: 300lbs

TOOLS REQUIRED

Socket Wrench [included]

Hex Wrench [included]

HARDWARE INCLUDED

NOTE: Hardware not shown to actual size.

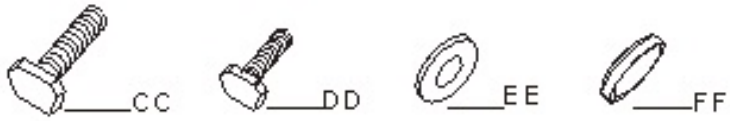

Part	Description	Quantity
CC	M6*20mm Hex Bolt	2
DD	M6*15mm Hex Bolt	6
EE	M6 Washer	8
FF	M6 Hex Bolt Cap	8

Pre-Assembly (continued)

TABLE PACKAGE CONTENTS

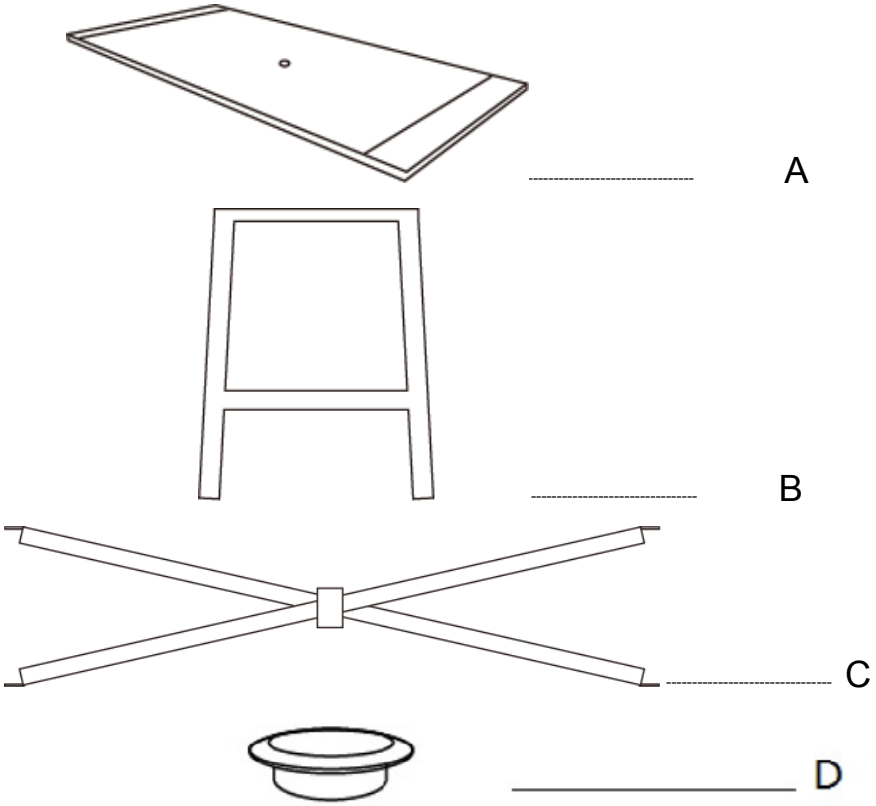

Part	Description	Quantity
A	Table Top	1
B	Table Leg	2
C	Fixed Connector	1
D	Umbrella Ring	1

Safety Information

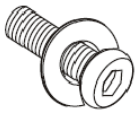

- EVERY BOLT NEEDS TO BE USED WITH A WASHER.
- DO NOT FULLY TIGHTEN BOLT UNTIL INDICATED IN **STEP 2.**

9 Attaching the table legs

- Place the table top (A) on a soft, flat non-abrasive surface. Attach the table legs (B) to the table top (A) using washers (EE) and hex bolts (DD).

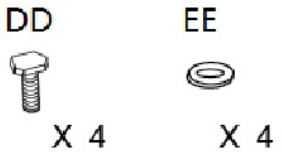

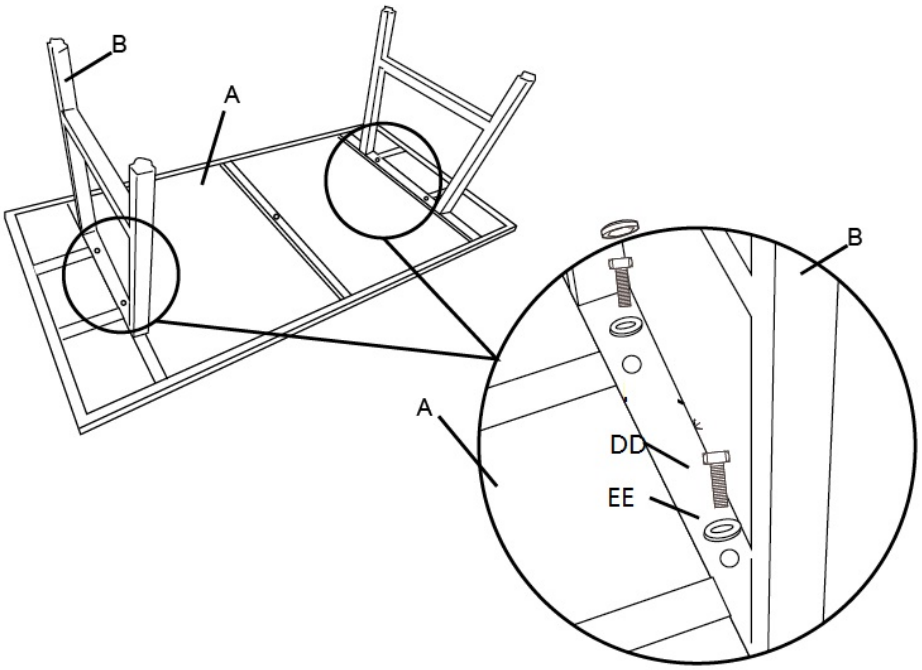

Assembly Instruction (continued)

1 Attaching the fixed connector

- □ Attach the fixed connector (C) to the table top (A) using washers (EE) and hex bolts (CC).
- □ Attach the fixed connector (C) to the table leg (B) using washers (EE) and hex bolts (DD).
- □ Tighten all hex bolts (CC&DD) with the socket wrench.
- □ Attach the hex bolt caps (FF).

NOTE: Once all the bolts are in place tighten completely.

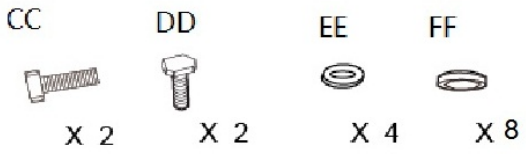

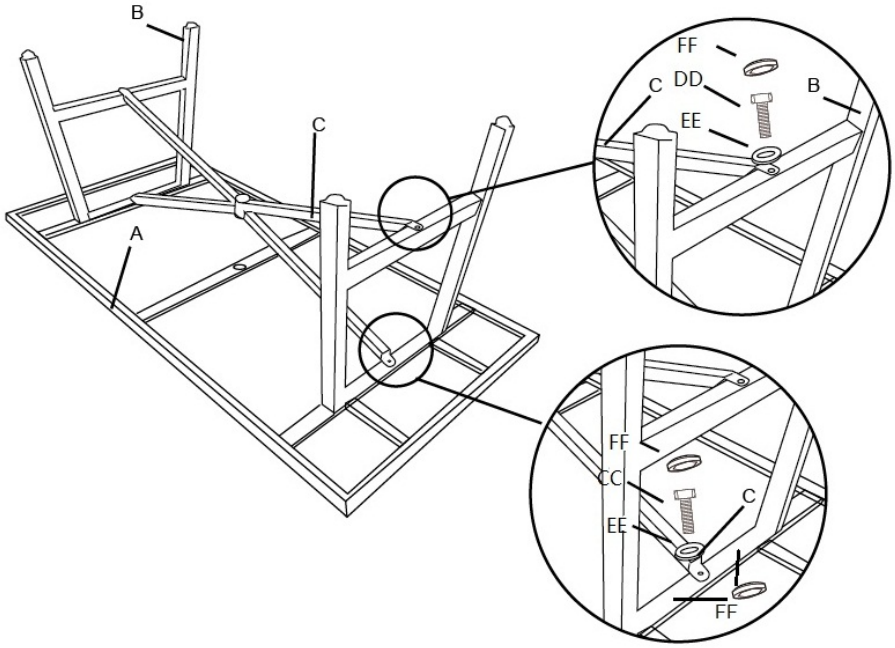

Assembly Instruction (continued)

1´ Positioning the table

- □ Turn the table over and set it down on its legs.
- □ Put the umbrella ring (D) onto the table top.
- □ The table is now ready for use.

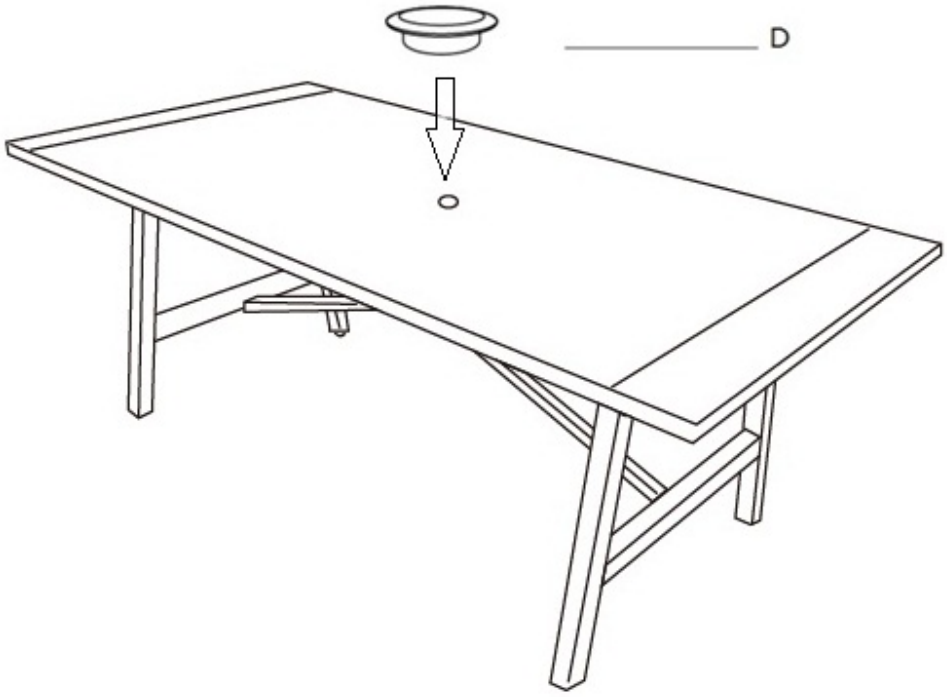

sears

Please refer to part number when reordering

Questions, problems, missing parts? Before returning to the store,
call our Customer Service
8 a.m. - 5 p.m., EST, Monday-Thursday
8 a.m. – 4 p.m., EST, Friday

1-866-391-4868

Made in/ Hecho en CHINA

Distributed by Sears, Roebuck and Co., Hoffman Estates, IL60179

See our extensive assortment of outdoor living products on-line

at www.sears.com and www.kmart.com

Retain this manual for future use.