36" Gas Cooktop

800 Series - Stainless Steel NGM8655UC

BOSCH
Invented for life

NGM8655UC

Also available in:

Black NGM8665UC

Bosch cooktops are engineered to perform, offering high heat burners for optimal cooking results.

Features & Benefits
Powerful 18,000 BTU center burner speeds cooking time.
Heavy-duty metal knobs for a premium look and feel.
Distinctive red LED light indicates burners are on.

General Properties	
Knob material	Metal
Sealed burners	Yes
Grate material	Cast iron
Element Performance	
Total BTU load (NG / LP)	59,500 / 47,300
Power of front left burner (NG / LP)	12,000 / 9,100
Power of back left burner (NG / LP)	12,000 / 9,100
Power of center burner (NG / LP)	18,000 / 15,000
Power of back right burner (NG / LP)	5,500 / 5,000
Power of front right burner (NG / LP)	12,000 / 9,100
Technical Details	
Watts	360 W
Circuit breaker	15 A
Volts	120 V
Frequency	60 Hz
Plug type	3 prong
Power cord length	60"
Energy source	Gas
Convertible to LP (kit required)	Yes

Dimensions & Weight	
Overall appliance dimensions (HxWxD)	3 13/16" x 37" x 21 1/4"
Required cutout size (HxWxD)	3 13/16" x 34 15/16" x 19 1/8"
Minimum distance from counter front	1 7/8"
Minimum distance from rear wall	3"
Net weight	39 lbs
Accessories–Included	
Included	LP conversion kit

ADA COMPLIANT

For help and assistance with Bosch accessories please visit: www.bosch-eshop.com/eshop/bosch/us or call 1-800-944-2904 Mon-Fri 5am to 6pm PST Sat 6am to 3pm PST

Notes: All height, width and depth dimensions are shown in inches. Please refer to installation instructions prior to making cutout. BSH reserves the absolute and unrestricted right to change product materials and specifications, at any time, without notice. Consult the product's installation instructions for final dimensional data and other details. Applicable product warranty can be found in accompanying product literature or you may contact your account manager for further details.

Warranties: Bosch warrants that the Product is free from defects in materials and workmanship for a period of three hundred and sixty-five (365) days from the date of purchase. The foregoing timeline begins to run upon the date of purchase, and shall not be stalled, tolled, extended, or suspended, for any reason whatsoever. This Product is also warranted to be free from cosmetic defects in material and workmanship (such as scratches of stainless steel, paint/porcelain blemishes, chip, dents, or other damage to the finish of the Product, for a period of thirty (30) days from the date of purchase or closing date for new construction. This cosmetic warranty excludes slight color variations due to inherent differences in painted and porcelain parts, as well as differences caused by kitchen lighting, product location, or other similar factors. This cosmetic warranty specifically excludes any display, floor, "As Is", or "B" stock appliances.

For more information on our entire line of products, go to www.bosch-home.com/us or call 1-800-944-2904

© BSH Home Appliances Corporation. All rights reserved. Bosch is a registered trademark of Robert Bosch GmbH.

36" Gas Cooktop

800 Series - Stainless Steel NGM8655UC

BOSCH
Invented for life

Installation Details

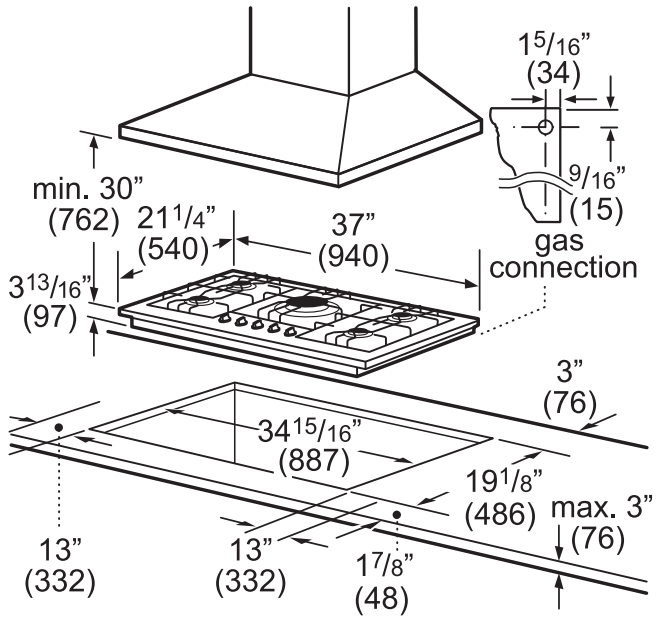

Installation above Wall Ovens

30" Built-in oven - under gas cooktop

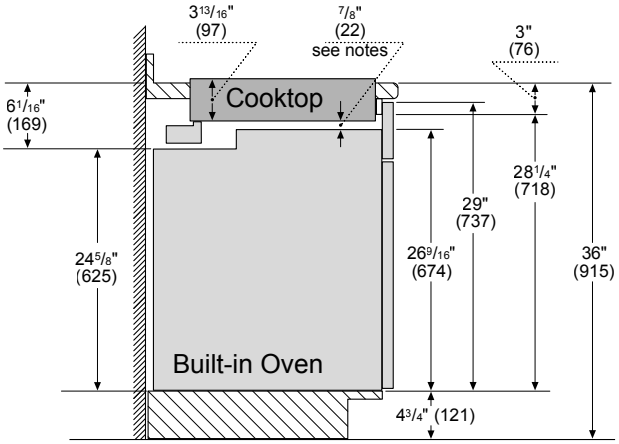

Notes:

Dimensions based on standard countertop height (36" with 4 3/4" toe kick including base plate).

The built-in oven can be installed below the gas cooktop as long as there is no contact between the bottom of the cooktop and the top of the oven.

Measurements in inches (mm)

Side View Gas Cooktop Installation

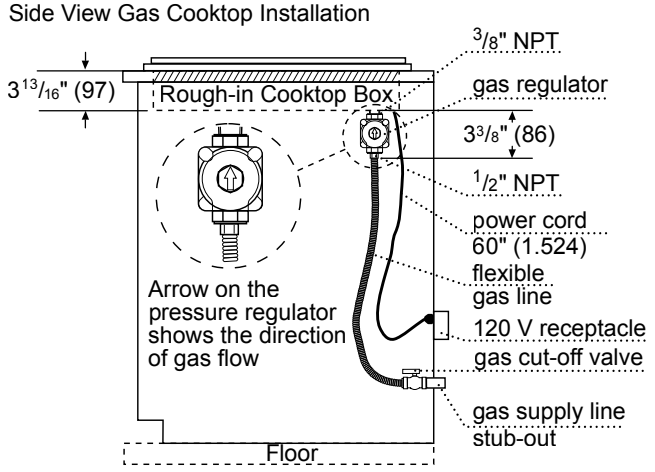

Measurements in inches (mm)

For help and assistance with Bosch accessories please visit: www.bosch-eshop.com/eshop/bosch/us or call 1-800-944-2904 Mon-Fri 5am to 6pm PST Sat 6am to 3pm PST

Notes: All height, width and depth dimensions are shown in inches. Please refer to installation instructions prior to making cutout. BSH reserves the absolute and unrestricted right to change product materials and specifications, at any time, without notice. Consult the product's installation instructions for final dimensional data and other details. Applicable product warranty can be found in accompanying product literature or you may contact your account manager for further details.

Warranties: Bosch warrants that the Product is free from defects in materials and workmanship for a period of three hundred and sixty-five (365) days from the date of purchase. The foregoing timeline begins to run upon the date of purchase, and shall not be stalled, tolled, extended, or suspended, for any reason whatsoever. This Product is also warranted to be free from cosmetic defects in material and workmanship (such as scratches of stainless steel, paint/porcelain blemishes, chip, dents, or other damage to the finish of the Product, for a period of thirty (30) days from the date of purchase or closing date for new construction. This cosmetic warranty excludes slight color variations due to inherent differences in painted and porcelain parts, as well as differences caused by kitchen lighting, product location, or other similar factors. This cosmetic warranty specifically excludes any display, floor, "As Is", or "B" stock appliances.

For more information on our entire line of products, go to www.bosch-home.com/us or call 1-800-944-2904

© BSH Home Appliances Corporation. All rights reserved. Bosch is a registered trademark of Robert Bosch GmbH.