LG AIRCONDITIONER ENGINEERING PRODUCT DATA BOOK

PTAC Type

(60Hz/R410A)

6RWU0-03A

LG
Life's Good

Introduction

Part 1 General information

1. Model line up 12
2. Nomenclature 13
3. Appearance.....14
4. List of functions 15
5. Features 16

Part 2 Product data

1 YA chassis 22
1.1 Features.....22
1.2 List of functions.....23
1.3 Specifications.....24
1.4 Dimensions.....30
1.5 Piping diagrams.....31
1.6 Wiring diagrams.....33
1.7 Capacity tables.....35
1.8 Electrical characteristics.....43
1.9 Operation range.....44

2 Control Devices.....45
2.1 Electronic Controls.....45

Part 3 Design and installation

1 General installation procedure.....51

2 Installation of unit.....52

2.1 Safety precautions.....52
2.2 Points of explanation about operations 55
2.3 Selecting installation site for the unit 55
2.4 Installation of unit.....56
2.5 Wall sleeve installation 58

Part 4 Accessories

1 Controller accessories 65

1.1 Hard Wire kit 65
1.2 Wired Wall Thermostat Connection Kit 67

2 Mechanical accessories 68

2.1 Stamped Aluminum Grille - Single Pack 68
2.2 Remote Escutcheon Kit - 10 Pack 69
2.3 Replacement Filter - 10 Pack.....70
2.4 Vent Filter 70

Test condition of International Standards

CLASSIFICATION			KSC 9306	ISO 5151	ARI 210/240	AHAM	AS 1861.1	SSA 385
Cooling Capacity	Indoor	DB°C(°F)	27.0	27.0	26.7(80)	26.7(80)	27.0	29.0
		WB°C(°F)	19.5	19.0	19.4(67)	19.4(67)	19.0	19.0
	Outdoor	DB°C(°F)	35.0	35.0	35.0(95)	35.0(95)	35.0	46.0
		WB°C(°F)	24.0	24.0	23.9(75)	23.9(75)	24.0	24.0
Heating Capacity	Indoor	DB°C(°F)	20.0	20.0	21.1(70)	21.1(70)	21.0	21.0
		WB°C(°F)	15.0	15.0	15.6(60)	15.6(60)	15.0	15.5
	Outdoor	DB°C(°F)	7.0	7.0	8.3(47)	8.3(47)	7.0	7.0
		WB°C(°F)	6.0	6.0	6.1(43)	6.1(43)	6.0	6.0
Maximum Cooling Operating	Indoor	DB°C(°F)	32.0	32.0	26.7(80)	32.2(90)	32.0	29.0
		WB°C(°F)	23.0	23.0	19.4(67)	22.8(73)	23.0	19.0
	Outdoor	DB°C(°F)	43.0	43.0	46.1(115)	43.3(110)	43.0	54.0
		WB°C(°F)	26.0	26.0	23.9(75)	25.6(78)	26.0	24.0
Maximum Heating Operating	Indoor	DB°C(°F)	27.0	27.0	26.7(80)	26.7(80)	-	-
		WB°C(°F)	19.0	19.0	19.4(67)	22.8(73)	-	-
	Outdoor	DB°C(°F)	21.0	24.0	23.9(75)	23.9(75)	-	-
		WB°C(°F)	15.0	18.0	18.3(65)	18.3(65)	-	-
Enclosure Sweat / Condensate Disposal	Indoor	DB°C(°F)	27.0	27.0	26.7(80)	26.7(80)	27.0	27.0
		WB°C(°F)	24.0	24.0	23.9(75)	23.9(75)	24.0	24.0
	Outdoor	DB°C(°F)	27.0	27.0	26.7(80)	26.7(80)	27.0	27.0
		WB°C(°F)	24.0	24.0	23.9(75)	23.9(75)	24.0	24.0
Freeze-up/ Low Temperature	Indoor	DB°C(°F)	21.0	21.0	19.4(67)	21.1(70)	21.0	21.0
		WB°C(°F)	15.0	15.0	13.9(57)	15.6(60)	16.0	16.0
	Outdoor	DB°C(°F)	21.0	21.0	19.4(67)	21.1(70)	21.0	21.0
		WB°C(°F)	15.0	15.0	13.9(57)	15.6(60)	16.0	16.0

KS : Korea Standard
ISO : International Standard Organization
ARI : Airconditioning and Refrigeration Institute
AHAM : Association of Home Appliance Manufacturers
AS : Australia Standard
SSA : Saudi Arabian Standard

In the table above, temperatures are expressed in Fahrenheit(°F) within parentheses only for ARI and AHAM standards.

Introduction

Preface

Packaged Terminal Air-Conditioners(PTAC) of LG is the best choice a customer can avail when it comes to a quiet environment. Ultra quiet operation is the hallmark of these Air-Conditioners of LG. These range of units are suitable for Hotels and Healthcare applications. These units have extremely low noise levels and outstanding sound prevention ratings. Moreover, these units have higher Energy ratings which results in excellent energy savings.

These units are also provided with unique features to provide better usability and easy installation for the user.

The capacity of these PTAC models ranges from 7,000 Btu/h to 15,000 Btu/h.

Some of the important features of this units are as follows:-

Long term money saving: By providing features such as Gold Fin etc... to maintain the same performance throughout the life of the Air-Conditioner.

Comfort : With features such as Wall Thermostat temperature control, Auto Restart, etc…, which gives ultimate comfort to our customer.

These units are equipped with many standard and optional features for our customers and for details please refer to the detailed specification followed after this description.

LG Electronics Inc.

Air Conditioning & Energy Solution Company

Publication History

Pub. No.	Frequency	Category	Product name	Refrigerant	Notes	Published in
6RWU0 - 01A	60Hz	RAC	PTAC	R410A	New Edition of PDB	Apr.2010
6RWU0 - 01B	60Hz	RAC	PTAC	R410A	Spec sheet update	June.2010
6RWU0 – 01C	60Hz	RAC	PTAC	R410A	Spec sheet update	August. 2010
6RWU0 – 01D	60Hz	RAC	PTAC	R410A	Add Operation range	Dec. 2010
6RWU0 – 02A	60Hz	RAC	PTAC	R410A	2011 New line-up update	Apr. 2011
6RWU0 – 02B	60Hz	RAC	PTAC	R410A	Modified Capacity Table	Apr. 2012
6RWU0 – 02C	60Hz	RAC	PTAC	R410A	Spec Sheet Update	Apr. 2012
6RWU0-03A	60Hz	RAC	PTAC	R410A	2013 Model Line Up	Mar, 2013

Step by step air conditioner selection process (reference)

(1) **Calculate or obtain the maximum heat load for the area to be air conditioned.**

↓

(2)

Specifications

Model features and functions

Air-flow and temperature distribution

↓

(3)

Selection of the control system

Remote Wall Thermostat Control

Front Desk Control

⚠CAUTION

1. Air conditioners should not be installed in areas where corrosive gases such as acid gas or alkaline gas is present.

Note :
Here in this PDB, the temperature units are generally expressed in Fahrenheit (°F) but for specific regions please conform to local standards whenever necessary.

Part 1 General information

1. Model line up 12
2. Nomenclature 13
3. Appearance 14
4. List of functions 15
5. Features 16

1. Model line up

Chassis	Model names			
	Capacity, kW(kBtu/h)			
	2.05(7)	2.64(9)	3.52(12)	4.4(15)
YA	UYC073ALE21(LP073CD2B) UYH073ALE21(LP073HD2B)	UYC093ALE31(LP093CD3B) UYH093ALE31(LP093HD3B) UYC09EALE31(LP096CD3B) UYH09EALE31(LP096HD3B)	UYC123ALE31(LP123CD3B) UYH123ALE31(LP123HD3B) UYC12EALE31(LP126CD3B) UYH12EALE31(LP126HD3B)	UYC153ALE31(LP153CD3B) UYH153ALE31(LP153HD3B)

2. Nomenclature

Global standard

[New version]

U	Y	C	0	7	3	A	L	E	2	1

Model Development serial number.

Heater Capacity:

0kW: No Heater	2kW: 2.0 ~ 2.9	4kW : 4.0 ~ 4.9
1kW: 1.0 ~ 1.9	3kW: 3.0 ~ 3.9	5kW : 5.0 ~ 5.9

Function.

A: Cooling Standard	H: Heat Pump Standard
B: Cooling + Corrosion Protection	J: Heat Pump + Corrosion Protection
C: Cooling + Condensate Pump	K: Heat Pump + Condensate Pump
E: Electronic	

Look.

L: LG

Chassis : A – YA chassis.

Power Rating:

1: 115V, 60Hz	6: 220-240V, 50Hz	E: 265V, 60Hz
2: 220V, 60Hz	7: 110V, 50-60Hz	
3: 208-230V, 60Hz	8: 380-415V, 50Hz	
5: 200-220V, 50Hz	9: 380-415V, 60Hz	

Cooling/Heating Capacity.

Ex) 07 -> 7,000 Btu/h Class

Model Type:

C: Cooling + Electric Heater or Cooling only.
H: Heat pump + Electric Heater or Heat Pump only.

W: Window Air Conditioner	U: SPVU Air Conditioner
Y: Packaged Terminal Air Conditioner	L: Condole Air Conditioner
X: Through the Wall Air Conditioner	Q: Low Profile Air Conditioner
E: Casement Air Conditioner	

Production Center, Refrigerant

L: Changwon R22	N: India
A: Changwon R410A	Z: Brazil
C: Changwon R407C	D: Indonesia
T: China	M: Mexico
K: Turkey R22	V: Vietnam
E: Turkey R410A	S: Outsourcing
H: Thailand	U: China R410A

3. Appearance

Chassis	Unit	Models
YA		UYC073ALE21(LP073CD2B) UYH073ALE21(LP073HD2B) UYC093ALE31(LP093CD3B) UYH093ALE31(LP093HD3B) UYC09EALE31(LP096CD3B) UYH09EALE31(LP096HD3B) UYC123ALE31(LP123CD3B) UYH123ALE31(LP123HD3B) UYC12EALE31(LP126CD3B) UYH12EALE31(LP126HD3B) UYC153ALE31(LP153CD3B) UYH153ALE31(LP153HD3B)

4. List of functions

Category	Function	PTAC Type Cooling only Models	PTAC Type Heat Pump Models
Air flow	Air discharge type	Top discharge	Top discharge
	Airflow direction control (up & down)	Manual	Manual
	Airflow direction control (left & right)	-	-
	Auto swing	-	-
	Airflow steps (fan/cool/heat)	2/2/2	2/2/2
	Airflow Direction	2 way	2 way
Air purifying	Deodorizing filter	-	-
	Plasma air filter	-	-
	Air filter (washable / anti-fungus)	O	O
Installation	Electric heater (operation)	O	O
Reliability	Hot start	-	-
Convenience	Auto restart operation	O	O
	Micom control	O	O
	Air ventilation	O	O
	Forced operation	-	-
	Sleep mode	-	-
	Timer	O	O
Individual control	Wired remote controller	O	O
	Wireless remote controller	O	O
	Wireless LCD remote control	O	O
Others	Energy save mode	O	O
	Thermostat	-	-
	Thermistor	O	O

O : applied
- : not applied

5. Features

The following features can be found in PTAC (Packaged Terminal Air-Conditioners) :-

- **2 -Way Air Flow Direction**
- **Washable Filters**
- **Low Noise at High Air Volume**
- **High Efficiency Compressor**
- **Energy Saver Mode**
- **Timer**
- **Electric Heater**
- **Deice Control**
- **Air Ventilation**
- **Energy saving Anti-corrosion treated Fins**
- **Infinite Impulse Response(IIR)**
- **Compressor Restart Delay**
- **Fan only Setting**
- **Indoor Fan Speed Setting**
- **Two Fan Motors**
- **LED Diagnostics and Self Diagnostics**
- **2 Position Discharge Grille**
- **Indoor Room Freeze Protection**
- **Door Switch/Occupancy Sensor**
- **Compressor Overload Protection**
- **Outdoor Air Temperature Switchover**
- **Temperature Limits**
- **Condensate Drain Valve**
- **Quick Heater Recovery**
- **Reverse Cycle Defrosting (PTHP's only)**
- **High Temperature Heat Pump operation Protection**
- **Remote Thermostat Control**
- **Zone Sensor**

2 -Way Air Flow Direction

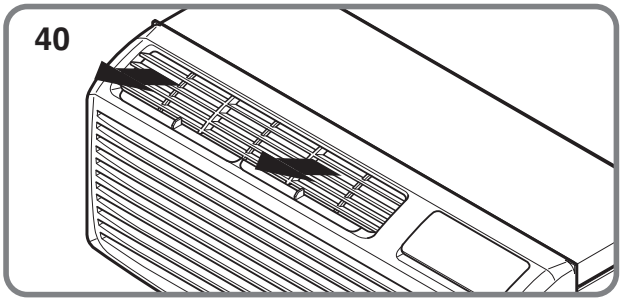

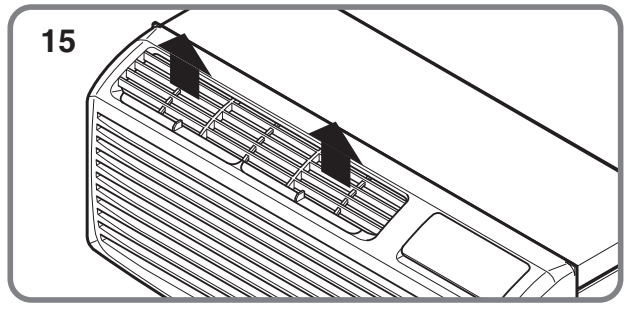

Air Flow can be adjusted by changing the direction of the air conditioner's louvers to attain the desired level of comfort and convenience. This can also increase the cooling efficiency of the air conditioner.

In order to attain maximum cooling efficiency, adjust the louvers so that they face upwards.

Washable Filters

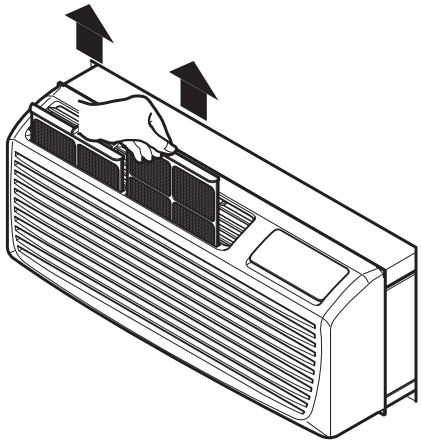

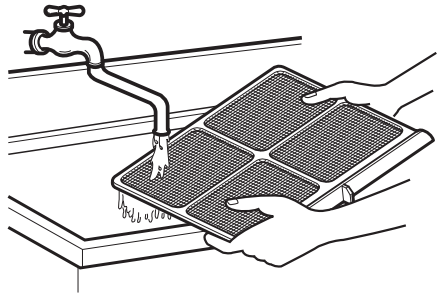

The Unit uses two filters on the indoor side which can be slid easily. These filters can be taken out without removing the Front Grille and then cleaned by washing or brushing.

The filters should be checked and cleaned every two(2) weeks or as necessary to maintain the optimal performance of the air conditioner depending upon the region and purpose of application.

Low Noise at High Air Volume

New Blowers and Fans which are bigger and stronger than earlier ones operate at low rpm's and have higher efficiency.

High Efficiency Compressor

LG Rotary compressors have low noise, low vibration and higher efficiency and reliability.

Energy save mode

This feature employs a programmable logic which enables the unit to minimize power consumption. When the switch is activated in the "on" position, the Indoor fan turns off as soon as the compressor stops running. And in the "off" mode, the indoor fan runs continuously even if the compressor stops running.

Timer

By this feature we can set the operating time of the air conditioner from one(1) hour up to a time of 12 hours. In the "Off" mode, the Air Conditioner stops operating after the set time, while in the "On" mode, the Air Conditioner timer can be set so that the unit starts operating at the desired time.

Electric Heater

Electric heaters are used in cold regions when instant heating is required in the room.

In such cases, electric heaters are preferred over heat pump models which sometime require long time to achieve the desired heating effect.

Electric Heater are of two types – Coil Heater and PTC Heater

Fig : Coil Heater

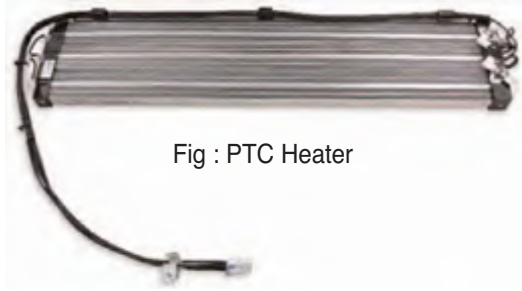

Fig : PTC Heater

Deice Control

When the unit starts operating in the heating mode, then, to protect the outdoor unit pipe from freezing, “deice” control is used. By exercising this control, the cycle is reversed into the cooling mode; to deice or defrost the condenser tubes in the outdoor unit.

Air Ventilation

Air ventilation is carried out by means of a ventilation lever from time to time to induct fresh air into the room. For the air conditioner to maintain the best cooling conditions, the lever must be in the closed position. And when the ventilation lever is set in the open position, the damper opens and the room air is exhausted while at the same time fresh air from outside enters the room.

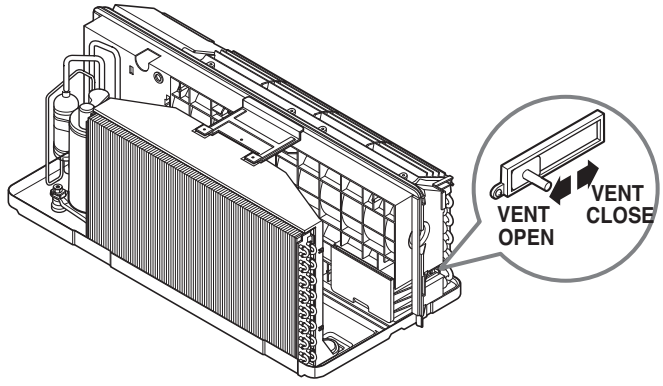

Energy saving Gold Fin

Heat exchangers are coated with anti-corrosive and Hydrophilic layers. It prevents the corrosion of heat exchanger. Fins remain new for a long time and the efficiency of the heat exchanger remains constant thereby saving power and maintenance cost.

Gold Fin Anti-Corrosive Treatment:

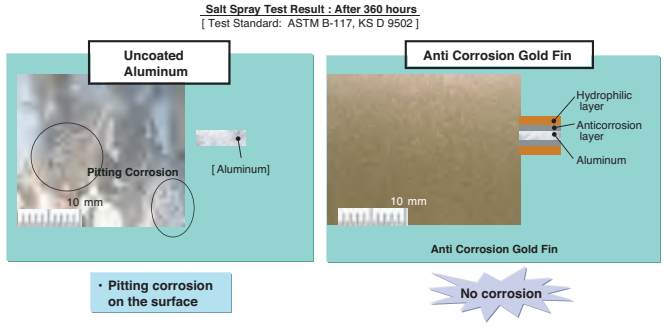

Infinite Impulse response (IIR)

The IIR function senses the temperature several times per second and make micro adjustments accordingly.

Compressor Restart Delay

This feature extends the overall life of the compressor by preventing the short cycling of the air-conditioner. When the compressor restarts, LG PTAC is designed to give it a minimum of three minutes to have a time of equalizing the refrigerant pressures for optimizing the cycle.

Fan only setting

When the Fan only setting is made, only the fan on the indoor side operates while the compressor stops operating and the unit ceases to run in the Cooling or the Heating mode.

Indoor Fan speed setting

The Indoor fan can run at HIGH or LOW speed for either COOLING or HEATING operation.

Two Fan motors

The air conditioning unit has two fan motors for providing a quiet operation and maximum efficiency.

LED Diagnostics and Self Diagnostics

LED Diagnostics feature indicates the problem by its easy to read diagnostics, when the unit does not operate properly. For example, one blink every 2 seconds indicate compressor failure.

While Self Diagnostics feature is used in micom models and it indicates the problem by a displaying a set of error codes.

2 position discharge grille

The discharge grille can provide air flow upwards at an angle of 40˚ off vertical or 15˚ off vertical. The angle is changed by removing the front grille and 4 screws that fasten the discharge grille to the front grille and rotating the louvers to an alternate position.

Indoor room freeze protection

When the unit senses the room temperature to be less than 40˚ F, the unit activates the fan motor and either the electric resistance heater or the hydronic heater, to prevent the pipes or fixtures from freezing. This also overrides the front desk control of the unit mounted controls or the wall mounted controls.

Door Switch/Occupancy Sensor

The unit is capable of accommodating a field installed door switch and occupancy sensor to operate the energy management feature by checking whether any people are present inside the room or not. If there are no people inside the room, the energy management feature is in play.

Compressor Overload protection

This feature prevents damage of the compressor by sensing the indoor coil temperature during the heating mode. If the indoor coil temperature is over 130˚ F, the outdoor fan is switched off and it operates again only when the temperature drops below 120 ˚ F.

Outdoor Air Temperature switchover

This feature changes the operating mode of the unit from the heat pump mode to total resistance heat.

Temperature limits

The unit is programmed to provide both heating and cooling temperature limits by dip switches on the control panel. The limits are from 50˚ F to 90˚ F. These temperature limits help to prevent overheating and overcooling thereby reducing the energy costs.

Condensate Drain Valve

The unit has a condensate drain valve to prevent water from collecting and freezing in the basepan.

Quick Heater Recovery

The unit is designed to operate the electric heater so as to warm the room to the desired temperature set point as soon as the Heat Pump cycle operates. This feature has an advantage of reducing the time to reach the desired temperature for better comfort.

Reverse Cycle Defrosting – (PTHP's only)

This feature enables the unit to activate the reverse cycle defrost so as to prevent the formation of ice on the outdoor unit, which is exposed to cold environment. Formation of ice reduces the airflow through the coil and hence the efficiency of the air conditioning unit. The LG PTHP employs an active reverse cycle defrost function to melt the ice off the outdoor coil for ensuring room comfort conditions and savings from extended operation.

High Temperature Heat Pump Operation Protection

When the unit operates at high outdoor temperature conditions during the cooling cycle, this feature switches off the compressor to prevent damage.

Remote Thermostat Control

The PTAC air conditioning unit is designed and built to be operated from any four(4) or five(5) wire remote mounted thermostat if desired. The unit has a built-in low voltage power source which can accommodate any of the thermostat choices – manual, auto changeover or programmable. A remote thermostat can also be added to any unit.

Zone Sensor

The PTAC air conditioning unit can be controlled by means of a Zone Sensor which carries out the same functions as that of a Wall Thermostat. In other words, it is a remote wall thermostat.

Part 2 Product data

1 YA chassis 22
1.1 Features 22
1.2 List of functions 23
1.3 Specifications 24
1.4 Dimensions.....30
1.5 Piping diagrams.....31
1.6 Wiring diagrams.....33
1.7 Capacity tables 35
1.8 Electrical characteristics 43
1.9 Operation range.....44

2 Control Devices.....45
2.1 Electronic Controls 45

1. YA Chassis

Models : UYC073ALE21(LP073CD2B) UYC093ALE31(LP093CD3B) UYC123ALE31(LP123CD3B) UYC153ALE31(LP153CD3B)
UYH073ALE21(LP073HD2B) UYH093ALE31(LP093HD3B) UYH123ALE31(LP123HD3B) UYH153ALE31(LP153HD3B)
UYC09EALE31(LP096CD3B) UYC12EALE31(LP126CD3B)
UYH09EALE31(LP096HD3B) UYH12EALE31(LP126HD3B)

1.1 Features

- 2 -Way Air Flow Direction
- Washable Filters
- Low Noise at High Air Volume
- High Efficiency Compressor
- Energy Saver Mode
- Timer
- Electric Heater
- Deice Control
- Air Ventilation
- Energy saving Anti-corrosion treated Fins
- Infinite Impulse Response(IIR)
- Compressor Restart Delay
- Fan only Setting
- Indoor Fan Speed Setting
- Two Fan Motors
- LED Diagnostics and Self Diagnostics
- 2 Position Discharge Grille
- Indoor Room Freeze Protection
- Door Switch/Occupancy Sensor
- Compressor Overload Protection
- Outdoor Air Temperature Switchover
- Temperature Limits
- Condensate Drain Valve
- Quick Heater Recovery
- Reverse Cycle Defrosting (PTHP’s only)
- High Temperature Heat Pump operation Protection
- Remote Thermostat Control
- Zone Sensor

1.2 List of functions

Category	Function	PTAC Cooling only Models	PTAC Heat Pump Models
Air flow	Air discharge type	Top discharge	Top discharge
	Airflow direction control (up & down)	Manual	Manual
	Airflow direction control (left & right)	-	-
	Auto swing	-	-
	Airflow steps (fan/cool/heat)	2/2/2	2/2/2
	Airflow Direction	2 way	2 way
Air purifying	Deodorizing filter	-	-
	Plasma air filter	-	-
	Air filter (washable / anti-fungus)	O	O
Installation	Electric heater (operation)	O	O
Reliability	Hot start	-	-
Convenience	Auto restart operation	O	O
	Micom control	O	O
	Air ventilation	O	O
	Forced operation	-	-
	Sleep mode	-	-
	Timer	O	O
Individual control	Wired remote controller	O	O
	Wireless remote controller	O	O
	Wireless LCD remote control	O	O
Others	Energy saver switch	O	O
	Thermostat	-	-
	Thermistor	O	O

Note :
O : applied
- : not applied

1.3 Specifications

208-230V COOLING ONLY MODELS

Buyer Models			LP073CD2B		LP093CD3B	
LG Models			UYC073ALE21		UYC093ALE31	
Cooling Capacity		kW	2.08	2.14	2.73	2.78
		Btu/h.	7,100	7,300	9,300	9,500
Heating Capacity (for Heat Pump models)		kW	-	-	-	-
		Btu/h.	-	-	-	-
Electric Heater capacity		kW	2.4	2.5	3.1	3.5
		Btu/h.	8,200	8,600	10,500	11,900
Power Input	Cooling/Heating	W	535	550	730	745
Running Current	Cooling/Heating	A	2.7	2.5	3.7	3.4
Electric Heater Current		A	11.5	10.9	14.9	15.2
EER		W/W	3.90	3.90	3.72	3.72
		Btu/h.W	13.3	13.3	12.7	12.7
COP		W/W	-	-	-	-
Power Supply		Ø / V / Hz	1 / 208 / 60	1 / 230 / 60	1 / 208 / 60	1 / 230 / 60
Power Factor		%	95	96	95	95
MCA		A	14.9		19.5	
MOP		A	15.0		20.0	
Air Flow Rate	Indoor,(H/L)	m^3/min(CFM)	7.6(270)/6.3(225)		7.6(270)/6.3(225)	
	Outdoor,Max	m^3/min(CFM)	17(600)		17(600)	
Dehumidification		pts/h	1.7		2.6	
Sound Level	Indoor,H/M/L	dB(A)±3	45/-/43		46/-/44	
	Outdoor,Max	dB(A)±3	61		61	
Refrigerant & Charge		g(oz)	R410A, 740(26.1)		R410A,600(21.2)	
Compressor	Type		Rotary(Non Tropical)		Rotary(Non Tropical)	
	Model		GA060KAA		GA080KBA	
	Motor Type		PSC		PSC	
	Oil Type		POE(RB68A)orPVE(FVC68D)		POE(RB68A)orPVE(FVC68D)	
	Oil Charge	cc	310		230	
	RLA/LRA	A	2.9/16		3.7/19	
	O.L.P Name		B120-160-241E		B145-155-241E	
Fan	Type(In/Out)		Cross Flow Fan	Axial Fan	Cross Flow Fan	Axial Fan
	Motor Type(In/Out)		BLDC/BLDC		BLDC/BLDC	
	FLA(In/Out)	A	0.36/0.36		0.36/0.36	
	Motor Output(In/Out)	W	20/65		26/66	
Heat Exchanger	Evaporator	Rows * Column * FPI	2R *12C *18FPI		2R *10C *19FPI	
	Condensor	Rows * Column * FPI	3R *17C *20FPI		3R *17C *20FPI	
Power Supply Cable (Power Cord)		No. * AWG	3 * 12		3 * 12	
Dimensions (W * H * D)		mm	1,066 * 406 * 537		1,066 * 406 * 537	
		inch	42 * 16 * 21		42 * 16 * 21	
Net Weight		kg(lbs)	43(95)		43(95)	
Tool Code(Chassis)			YA		YA	
Features	Operating Range Voltage (Min/Max)		187/253		187/253	
	Temperature Control		Thermistor		Thermistor	
	Energy Saver Mode		O		O	
	Prefilter(washable/anti-fungus)		O		O	
	Plasma Filter		-		-	
	Steps, Fan/Cool/Heat		2/2/2		2/2/2	
	Airflow Direction Control(up&down)		Manual		Manual	
	Airflow Direction Control(left&right)		-		-	
	Remote Controller Type		Wall Thermostat		Wall Thermostat	
	Setting Temperature Range	Cooling	54°F ~ 86°F(12.2°C ~ 30°C)		54°F ~ 86°F(12.2°C ~ 30°C)	
		Heating	54°F ~ 86°F(12.2°C ~ 30°C)		54°F ~ 86°F(12.2°C ~ 30°C)	
	Auto Operation (Micom Control)		O		O	
	Panel Touch Type		Micom		Micom	
	Timer		12h, On/Off		12h, On/Off	
	Air Discharge		Top		Top	
	Air-Ventilation		O		O	
	Deice Control(Defrost)		-		-	
	Hot Start		-		-	
	Look		L - Look		L - Look	
	Cabinet Type(Chassis Type)		Slide In-Out		Slide In-Out	
	Special Function		Electric Heater		Electric Heater	

Note : -

○ : applied

- : not applied

Buyer Models			LP123CD3B		LP153CD3B	
LG Models			UYC123ALE31		UYC153ALE31	
Cooling Capacity		kW	3.52	3.58	4.37	4.43
		Btu/h.	12,000	12,200	14,900	15,100
Heating Capacity (for Heat Pump models)		kW	-	-	-	-
		Btu/h.	-	-	-	-
Electric Heater capacity		kW	3.1	3.5	3.1	3.5
		Btu/h.	10,500	11,900	10,500	11,900
Power Input	Cooling/Heating	W	1,005	1,025	1,330	1,345
Running Current	Cooling/Heating	A	5.1	4.7	6.6	6.1
Electric Heater Current		A	14.9	15.2	14.9	15.2
EER		W/W	3.49	3.49	3.28	3.28
		Btu/h.W	11.9	11.9	11.2	11.2
COP		W/W	-	-	-	-
Power Supply		Ø / V / Hz	1 / 208 / 60	1 / 230 / 60	1 / 208 / 60	1 / 230 / 60
Power Factor		%	95	95	97	96
MCA		A	19.5		19.5	
MOP		A	20.0		20.0	
Air Flow Rate	Indoor,(H/L)	m^3/min(CFM)	11.9(420)/10.0(353)		11.9(420)/10.0(353)	
	Outdoor,Max	m^3/min(CFM)	20(706)		20(706)	
Dehumidification		pts/h	3.0		4.3	
Sound Level	Indoor,H/M/L	dB(A)±3	50/-/48		51/-/49	
	Outdoor,Max	dB(A)±3	63		64	
Refrigerant & Charge		g(oz)	R410A, 610(21.5)		R410A, 910(32.1)	
Compressor	Type		Rotary(Non Tropical)		Rotary(Non Tropical)	
	Model		PA108M1C		PA140M2C	
	Motor Type		PSC		PSC	
	Oil Type		ESTER OIL VG74		ESTER OIL VG74	
	Oil Charge	cc	350		440	
	RLA/LRA	A	5.0/27		6.55/38.6	
	O.L.P Name		BF910-MA		INTERNAL	
Fan	Type(In/Out)		Cross Flow Fan	Axial Fan	Cross Flow Fan	Axial Fan
	Motor Type(In/Out)		BLDC/BLDC		BLDC/BLDC	
	FLA(In/Out)	A	0.36/0.36		0.36/0.36	
	Motor Output(In/Out)	W	41/74		41/74	
Heat Exchanger	Evaporator	Rows * Column * FPI	2R *10C *19FPI		2R *10C *19FPI	
	Condensor	Rows * Column * FPI	3R *17C *20FPI		3R *17C *20FPI	
Power Supply Cable (Power Cord)		No. * AWG	3 * 12		3 * 12	
Dimensions (W * H * D)		mm	1,066 * 406 * 537		1,066 * 406 * 537	
		inch	42 * 16 * 21		42 * 16 * 21	
Net Weight		kg(lbs)	45(99)		52(115)	
Tool Code(Chassis)			YA		YA	
Features	Operating Range Voltage (Min/Max)		187/253		187/253	
	Temperature Control		Thermistor		Thermistor	
	Energy Saver Mode		O		O	
	Prefilter(washable/anti-fungus)		O		O	
	Plasma Filter		-		-	
	Steps, Fan/Cool/Heat		2/2/2		2/2/2	
	Airflow Direction Control(up&down)		Manual		Manual	
	Airflow Direction Control(left&right)		-		-	
	Remote Controller Type		Wall Thermostat		Wall Thermostat	
	Setting Temperature Range	Cooling	54°F ~ 86°F(12.2°C ~ 30°C)		54°F ~ 86°F(12.2°C ~ 30°C)	
		Heating	54°F ~ 86°F(12.2°C ~ 30°C)		54°F ~ 86°F(12.2°C ~ 30°C)	
	Auto Operation (Micom Control)		O		O	
	Panel Touch Type		Micom		Micom	
	Timer		12h, On/Off		12h, On/Off	
	Air Discharge		Top		Top	
	Air-Ventilation		O		O	
	Deice Control(Defrost)		-		-	
	Hot Start		-		-	
	Look		L - Look		L - Look	
	Cabinet Type(Chassis Type)		Slide In-Out		Slide In-Out	
	Special Function		Electric Heater		Electric Heater	

Note : -

○ : applied

- : not applied

208-230V HEAT PUMP MODELS

Buyer Models			LP073HD2B		LP093HD3B	
LG Models			UYH073ALE21		UYH093ALE31	
Cooling Capacity		kW	2.08	2.14	2.73	2.78
		Btu/h.	7,100	7,300	9,300	9,500
Heating Capacity (for Heat Pump models)		kW	1.82	1.88	2.34	2.40
		Btu/h.	6,200	6,400	8,000	8,200
Electric Heater capacity		kW	2.4	2.5	3.1	3.5
		Btu/h.	8,200	8,600	10,500	11,900
Power Input	Cooling/Heating	W	535/500	550/520	720/655	735/670
Running Current	Cooling/Heating	A	2.7/2.6	2.5/2.4	3.6/3.3	3.3/3.0
Electric Heater Current		A	11.5	10.9	14.9	15.2
EER		W/W	3.90	3.90	3.78	3.78
		Btu/h.W	13.3	13.3	12.9	12.9
COP		W/W	3.6	3.6	3.6	3.6
Power Supply		Ø / V / Hz	1 / 208 / 60	1 / 230 / 60	1 / 208 / 60	1 / 230 / 60
Power Factor		%	95	96	96	97
MCA		A	14.9		19.5	
MOP		A	15.0		20.0	
Air Flow Rate	Indoor,(H/L)	m^3/min(CFM)	7.6(270)/6.3(225)		7.6(270)/6.3(225)	
	Outdoor,Max	m^3/min(CFM)	17(600)		17(600)	
Dehumidification		pts/h	1.7		2.6	
Sound Level	Indoor,H/M/L	dB(A)±3	45/-/43		46/-/44	
	Outdoor,Max	dB(A)±3	61		61	
Refrigerant & Charge		g(oz)	R410A, 740(26.1)		R410A, 910(32.1)	
Compressor	Type		Rotary(Non Tropical)		Rotary(Non Tropical)	
	Model		GA060KAA		GKU086KAB	
	Motor Type		PSC		PSC	
	Oil Type		POE(RB68A)orPVE(FVC68D)		POE(RB68A)orPVE(FVC68D)	
	Oil Charge	cc	310		330	
	RLA/LRA	A	2.9/16		4.0/19	
	O.L.P Name		B120-160-241E		LMSH2Z69-L002	
Fan	Type(In/Out)		Cross Flow Fan	Axial Fan	Cross Flow Fan	Axial Fan
	Motor Type(In/Out)		BLDC/BLDC		BLDC/BLDC	
	FLA(In/Out)	A	0.36/0.36		0.36/0.36	
	Motor Output(In/Out)	W	20/65		26/66	
Heat Exchanger	Evaporator	Rows * Column * FPI	2R *12C *18FPI		2R *10C *19FPI	
	Condensor	Rows * Column * FPI	3R *17C *20FPI		3R *17C *20FPI	
Power Supply Cable (Power Cord)		No. * AWG	3 * 12		3 * 12	
Dimensions (W * H * D)		mm	1,066 * 406 * 537		1,066 * 406 * 537	
		inch	42 * 16 * 21		42 * 16 * 21	
Net Weight		kg(lbs)	43(95)		48(106)	
Tool Code(Chassis)			YA		YA	
Features	Operating Range Voltage (Min/Max)		187/253		187/253	
	Temperature Control		Thermistor		Thermistor	
	Energy Saver Mode		O		O	
	Prefilter(washable/anti-fungus)		O		O	
	Plasma Filter		-		-	
	Steps, Fan/Cool/Heat		2/2/2		2/2/2	
	Airflow Direction Control(up&down)		Manual		Manual	
	Airflow Direction Control(left&right)		-		-	
	Remote Controller Type		Wall Thermostat		Wall Thermostat	
	Setting Temperature Range	Cooling	54°F ~ 86°F(12.2°C ~ 30°C)		54°F ~ 86°F(12.2°C ~ 30°C)	
		Heating	54°F ~ 86°F(12.2°C ~ 30°C)		54°F ~ 86°F(12.2°C ~ 30°C)	
	Auto Operation (Micom Control)		O		O	
	Panel Touch Type		Micom		Micom	
	Timer		12h, On/Off		12h, On/Off	
	Air Discharge		Top		Top	
	Air-Ventilation		O		O	
	Deice Control(Defrost)		O		O	
	Hot Start		-		-	
	Look		L - Look		L - Look	
	Cabinet Type(Chassis Type)		Slide In-Out		Slide In-Out	
	Special Function		Electric Heater		Electric Heater	

Note : -

○ : applied

- : not applied

Buyer Models			LP123HD3B		LP153HD3B	
LG Models			UYH123ALE31		UYH153ALE31	
Cooling Capacity		kW	3.52	3.58	4.37	4.43
		Btu/h.	12,000	12,200	14,900	15,100
Heating Capacity (for Heat Pump models)		kW	3.11	3.17	3.87	3.93
		Btu/h.	10,600	10,800	13,200	13,400
Electric Heater capacity		kW	3.1	3.5	3.1	3.5
		Btu/h.	10,500	11,900	10,500	11,900
Power Input	Cooling/Heating	W	1,010/885	1,025/905	1,330/1250	1,345/1265
Running Current	Cooling/Heating	A	5.2/4.6	4.8/4.3	6.6/6.2	6.1/5.7
Electric Heater Current		A	14.9	15.2	14.9	15.2
EER		W/W	3.49	3.49	3.28	3.28
		Btu/h.W	11.9	11.9	11.2	11.2
COP		W/W	3.5	3.5	3.1	3.1
Power Supply		Ø / V / Hz	1 / 208 / 60	1 / 230 / 60	1 / 208 / 60	1 / 230 / 60
Power Factor		%	93	93	97	96
MCA		A	19.5		19.5	
MOP		A	20.0		20.0	
Air Flow Rate	Indoor,(H/L)	m^3/min(CFM)	11.9(420)/10.0(353)		11.9(420)/10.0(353)	
	Outdoor,Max	m^3/min(CFM)	20(706)		20(706)	
Dehumidification		pts/h	3.0		4.3	
Sound Level	Indoor,H/M/L	dB(A)±3	50/-/48		51/-/49	
	Outdoor,Max	dB(A)±3	63		64	
Refrigerant & Charge		g(oz)	R410A, 850(30.0)		R410A, 910(32.1)	
Compressor	Type		Rotary(Non Tropical)		Rotary(Non Tropical)	
	Model		GKU113KAB		PA140M2C	
	Motor Type		PSC		PSC	
	Oil Type		POE(RB68A) or PVE(FVC68D)		ESTER OIL VG74	
	Oil Charge	cc	330		440	
	RLA/LRA	A	5.0/26		6.55/38.6	
	O.L.P Name		MRA98996-12026		INTERNAL	
Fan	Type(In/Out)		Cross Flow Fan	Axial Fan	Cross Flow Fan	Axial Fan
	Motor Type(In/Out)		BLDC/BLDC		BLDC/BLDC	
	FLA(In/Out)	A	0.36/0.36		0.36/0.36	
	Motor Output(In/Out)	W	41/74		41/74	
Heat Exchanger	Evaporator	Rows * Column * FPI	2R *10C *19FPI		2R *10C *19FPI	
	Condensor	Rows * Column * FPI	3R * 17C * 20FPI		3R *17C *20FPI	
Power Supply Cable (Power Cord)		No. * AWG	3 * 12		3 * 12	
Dimensions (W * H * D)		mm	1,066 * 406 * 537		1,066 * 406 * 537	
		inch	42 * 16 * 21		42 * 16 * 21	
Net Weight		kg(lbs)	48(106)		52(115)	
Tool Code(Chassis)			YA		YA	
Features	Operating Range Voltage (Min/Max)		187/253		187/253	
	Temperature Control		Thermistor		Thermistor	
	Energy Saver Mode		O		O	
	Prefilter(washable/anti-fungus)		O		O	
	Plasma Filter		-		-	
	Steps, Fan/Cool/Heat		2/2/2		2/2/2	
	Airflow Direction Control(up&down)		Manual		Manual	
	Airflow Direction Control(left&right)		-		-	
	Remote Controller Type		Wall Thermostat		Wall Thermostat	
	Setting Temperature Range	Cooling	54°F ~ 86°F(12.2°C ~ 30°C)		54°F ~ 86°F(12.2°C ~ 30°C)	
		Heating	54°F ~ 86°F(12.2°C ~ 30°C)		54°F ~ 86°F(12.2°C ~ 30°C)	
	Auto Operation (Micom Control)		O		O	
	Panel Touch Type		Micom		Micom	
	Timer		12h, On/Off		12h, On/Off	
	Air Discharge		Top		Top	
	Air-Ventilation		O		O	
	Deice Control(Defrost)		O		O	
	Hot Start		-		-	
	Look		L - Look		L - Look	
	Cabinet Type(Chassis Type)		Slide In-Out		Slide In-Out	
	Special Function		Electric Heater		Electric Heater	

Note : -

○ : applied

- : not applied

265V COOLING ONLY MODELS

Buyer Models			LP096CD3B	LP126CD3B
LG Models			UYC09EALE31	UYC12EALE31
Cooling Capacity		kW	2.84	3.58
		Btu/h.	9,700	12,200
Heating Capacity (for Heat Pump models)		kW	-	-
		Btu/h.	-	-
Electric Heater capacity		kW	3.7	3.7
		Btu/h.	12,600	12,600
Power Input	Cooling/Heating	W	755	1,025
Running Current	Cooling/Heating	A	3.0	4.0
Electric Heater Current		A	14.0	14.0
EER		W/W	3.75	3.49
		Btu/h.W	12.8	11.9
COP		W/W	-	-
Power Supply		Ø / V / Hz	1 / 265 / 60	1 / 265 / 60
Power Factor		%	95	97
MCA		A	17.9	17.9
MOP		A	20	20
Air Flow Rate	Indoor,(H/L)	m^3/min(CFM)	7.6(270)/6.3(225)	11.9(420)/10.0(353)
	Outdoor,Max	m^3/min(CFM)	17(600)	20(706)
Dehumidification		pts/h	2.6	3.0
Sound Level	Indoor,H/M/L	dB(A)±3	46/-/44	50/-/48
	Outdoor,Max	dB(A)±3	61	63
Refrigerant & Charge		g(oz)	R410A, 895(31.6)	R410A, 910(32.1)
Compressor	Type		Rotary(Non Tropical)	Rotary(Non Tropical)
	Model		GKU086QAA	GKU113QAA
	Motor Type		PSC	PSC
	Oil Type		POE(RB68A) or PVE(FVC68D)	POE(RB68A) or PVE(FVC68D)
	Oil Charge	cc	330	330
	RLA/LRA	A	3.3/20	4.4/22
	O.L.P Name		LPMD2W69-L002	LMSH2Z69-L002
Fan	Type(In/Out)		Cross Flow Fan / Axial Fan	Cross Flow Fan / Axial Fan
	Motor Type(In/Out)		BLDC/BLDC	BLDC/BLDC
	FLA(In/Out)	A	0.36/0.36	0.36/0.36
	Motor Output(In/Out)	W	26/66	41/74
Heat Exchanger	Evaporator	Rows * Column * FPI	2R *10C *19FPI	2R *10C *19FPI
	Condensor	Rows * Column * FPI	3R *17C *20FPI	3R *17C *20FPI
Power Supply Cable (Power Cord)		No. * AWG	3 * 12	3 * 12
Dimensions (W * H * D)		mm	1,066 * 406 * 537	1,066 * 406 * 537
		inch	42 * 16 * 21	42 * 16 * 21
Net Weight		kg(lbs)	48(106)	48(106)
Tool Code(Chassis)			YA	YA
Features	Operating Range Voltage (Min/Max)		239/292	239/292
	Temperature Control		Thermistor	Thermistor
	Energy Saver Mode		O	O
	Prefilter(washable/anti-fungus)		O	O
	Plasma Filter		-	-
	Steps, Fan/Cool/Heat		2/2/2	2/2/2
	Airflow Direction Control(up&down)		Manual	Manual
	Airflow Direction Control(left&right)		-	-
	Remote Controller Type		Wall Thermostat	Wall Thermostat
	Setting Temperature Range	Cooling	54°F ~ 86°F(12.2°C ~ 30°C)	54°F ~ 86°F(12.2°C ~ 30°C)
		Heating	54°F ~ 86°F(12.2°C ~ 30°C)	54°F ~ 86°F(12.2°C ~ 30°C)
	Auto Operation (Micom Control)		O	O
	Panel Touch Type		Micom	Micom
	Timer		12h, On/Off	12h, On/Off
	Air Discharge		Top	Top
	Air-Ventilation		O	O
	Deice Control(Defrost)		-	-
	Hot Start		-	-
	Look		L - Look	L - Look
	Cabinet Type(Chassis Type)		Slide In-Out	Slide In-Out
	Special Function		Coil Heater	Coil Heater

Note : -

○ : applied

- : not applied

265V HEAT PUMP MODELS

Buyer Models			LP096HD3B		LP126HD3B	
LG Models			UYH09EALE31		UYH12EALE31	
Cooling Capacity		kW	2.84		3.58	
		Btu/h.	9,700		12,200	
Heating Capacity (for Heat Pump models)		kW	2.49		3.22	
		Btu/h.	8,500		11,000	
Electric Heater capacity		kW	3.7		3.7	
		Btu/h.	12,600		12,600	
Power Input	Cooling/Heating	W	755/690		1,025/895	
Running Current	Cooling/Heating	A	3.0/2.7		4.0/3.5	
Electric Heater Current		A	14.0		14.0	
EER		W/W	3.75		3.49	
		Btu/h.W	12.8		11.9	
COP		W/W	3.6		3.6	
Power Supply		Ø / V / Hz	1 / 265 / 60		1 / 265 / 60	
Power Factor		%	95		97	
MCA		A	17.9		17.9	
MOP		A	20		20	
Air Flow Rate	Indoor,(H/L)	m^3/min(CFM)	7.6(270)/6.3(225)		11.9(420)/10.0(353)	
	Outdoor,Max	m^3/min(CFM)	17(600)		20(706)	
Dehumidification		pts/h	2.6		3.0	
Sound Level	Indoor,H/M/L	dB(A)±3	46/-/44		50/-/48	
	Outdoor,Max	dB(A)±3	61		63	
Refrigerant & Charge		g(oz)	R410A, 895(31.6)		R410A, 910(32.1)	
Compressor	Type		Rotary(Non Tropical)		Rotary(Non Tropical)	
	Model		GKU086QAA		GKU113QAA	
	Motor Type		PSC		PSC	
	Oil Type		POE(RB68A) or PVE(FVC68D)		POE(RB68A) or PVE(FVC68D)	
	Oil Charge	cc	330		330	
	RLA/LRA	A	3.3/20		4.4/22	
	O.L.P Name		LPMD2W69-L002		LMSH2Z69-L002	
Fan	Type(In/Out)		Cross Flow Fan	Axial Fan	Cross Flow Fan	Axial Fan
	Motor Type(In/Out)		BLDC/BLDC		BLDC/BLDC	
	FLA(In/Out)	A	0.36/0.36		0.36/0.36	
	Motor Output(In/Out)	W	26/66		41/74	
Heat Exchanger	Evaporator	Rows * Column * FPI	2R *10C *19FPI		2R *10C *19FPI	
	Condensor	Rows * Column * FPI	3R *17C *20FPI		3R *17C *20FPI	
Power Supply Cable (Power Cord)		No. * AWG	3 * 12		3 * 12	
Dimensions (W * H * D)		mm	1,066 * 406 * 537		1,066 * 406 * 537	
		inch	42 * 16 * 21		42 * 16 * 21	
Net Weight		kg(lbs)	48(106)		48(106)	
Tool Code(Chassis)			YA		YA	
Features	Operating Range Voltage (Min/Max)		239/292		239/292	
	Temperature Control		Thermistor		Thermistor	
	Energy Saver Mode		O		O	
	Prefilter(washable/anti-fungus)		O		O	
	Plasma Filter		-		-	
	Steps, Fan/Cool/Heat		2/2/2		2/2/2	
	Airflow Direction Control(up&down)		Manual		Manual	
	Airflow Direction Control(left&right)		-		-	
	Remote Controller Type		Wall Thermostat		Wall Thermostat	
	Setting Temperature Range	Cooling	54°F ~ 86°F(12.2°C ~ 30°C)		54°F ~ 86°F(12.2°C ~ 30°C)	
		Heating	54°F ~ 86°F(12.2°C ~ 30°C)		54°F ~ 86°F(12.2°C ~ 30°C)	
	Auto Operation (Micom Control)		O		O	
	Panel Touch Type		Micom		Micom	
	Timer		12h, On/Off		12h, On/Off	
	Air Discharge		Top		Top	
	Air-Ventilation		O		O	
	Deice Control(Defrost)		O		O	
	Hot Start		-		-	
	Look		L - Look		L - Look	
	Cabinet Type(Chassis Type)		Slide In-Out		Slide In-Out	
	Special Function		Coil Heater		Coil Heater	

Note : -

○ : applied

- : not applied

1.4 Dimensions

PTAC

Item No.	Part name	Remark
1	Inlet Grille	
2	Vertical Air Deflector	
3	Architectural Grille	
4		
5		

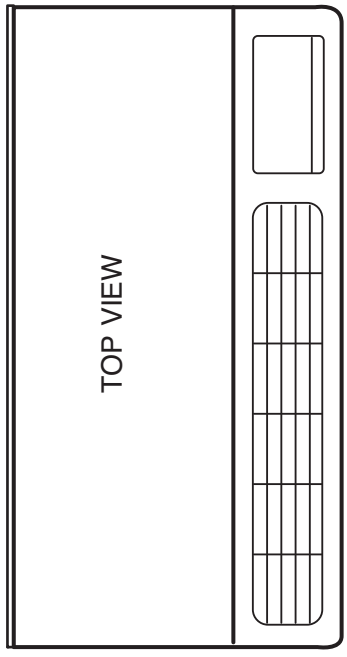

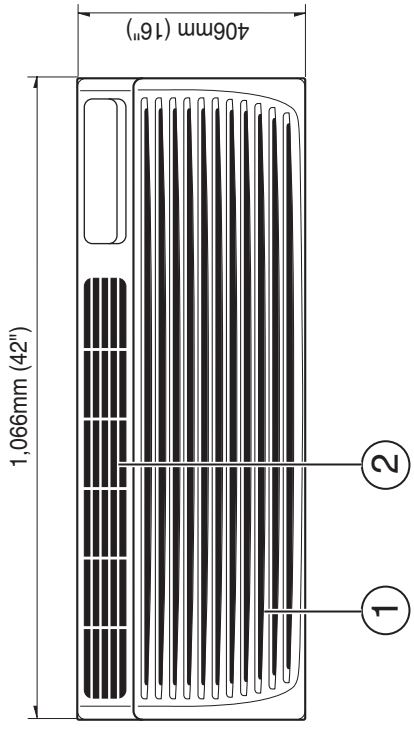

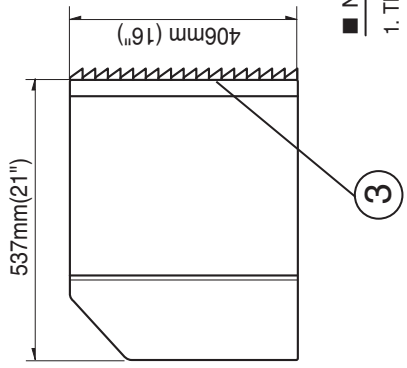

■ Note

1. The unit should not be installed in a closed area.
2. In an area or space having no proper circulation, an air guide should be installed on the outdoor side.

CHASSIS CODE : YA

LG Electronics
76, Seongsang-dong, Changwon City, Gyeongnam, 641-713, Korea
TEL : 82 – 55 – 269 - 3506
www.lge.com/airconditioner

1.5 Piping diagrams

Models : UYC073ALE21(LP073CD2B) UYC09EALE31(LP096CD3B)
UYC093ALE31(LP093CD3B) UYC12EALE31(LP126CD3B)
UYC123ALE31(LP123CD3B)
UYC153ALE31(LP153CD3B)

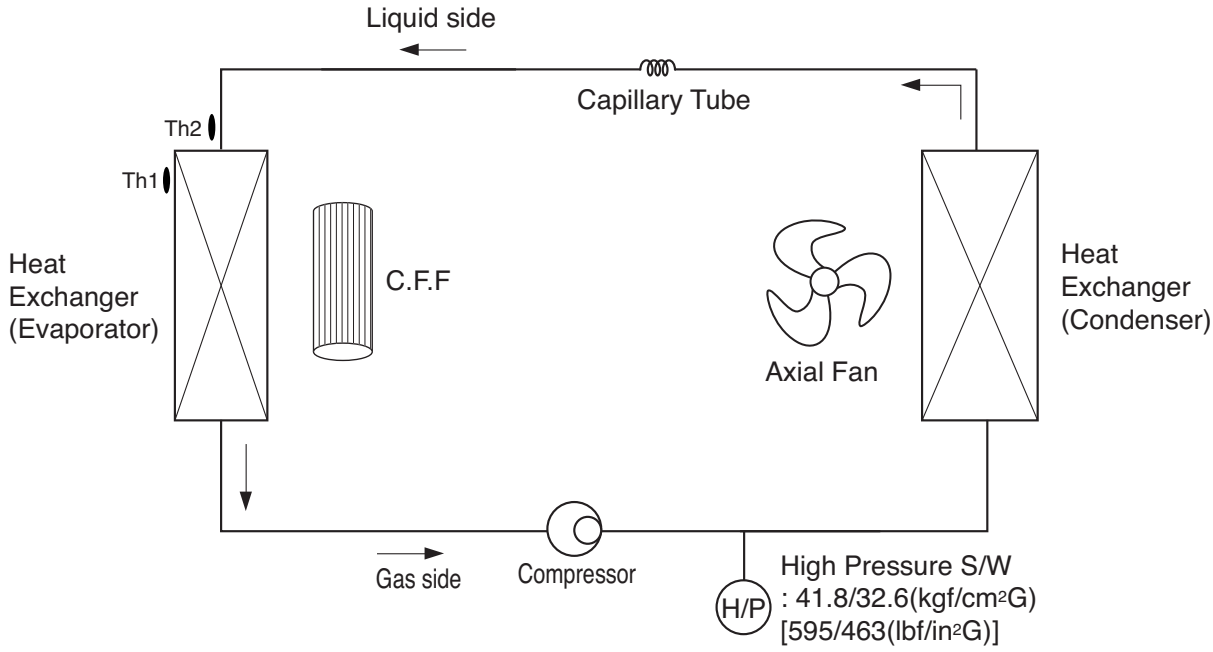

LOC.	Description	PCB Connector
Th1	Thermistor for indoor Air temperature	CN-IDAT2
Th2	Thermistor for evaporator temperature	CN-IDPT

Models : UYH073ALE21(LP073HD2B) UYH09EALE31(LP096HD3B)
UYH093ALE31(LP093HD3B) UYH12EALE31(LP126HD3B)
UYH123ALE31(LP123HD3B)
UYH153ALE31(LP153HD3B)

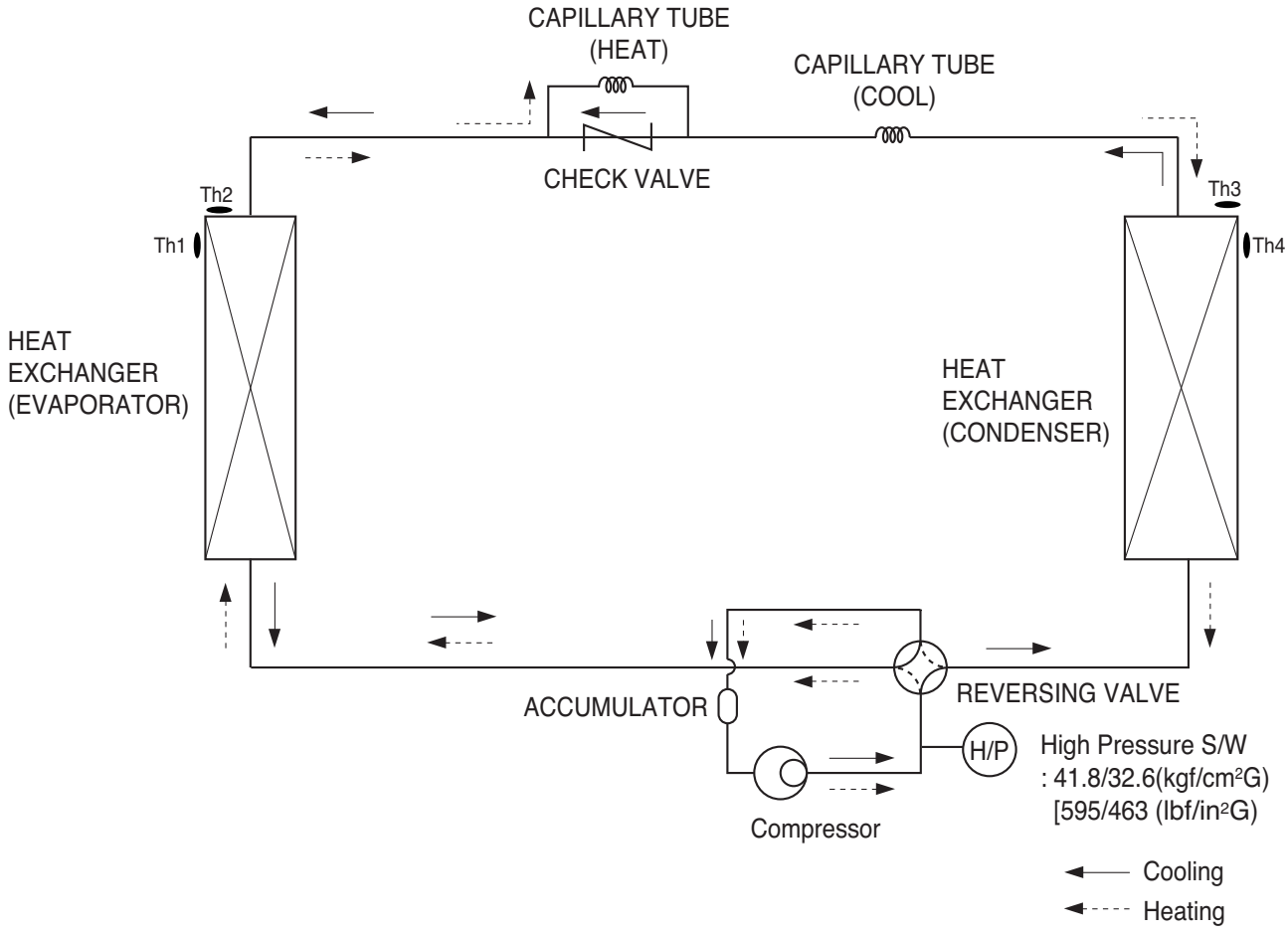

LOC.	Description	PCB Connector
Th1	Thermistor for indoor air temperature	CN-IDAT2
Th2	Thermistor for evaporator temperature	CN-IDPT
Th3	Thermistor for outdoor air temperature	CN-ODT
Th4	Thermistor for condenser temperature	

1.6 Wiring diagrams

Models : UYC073ALE21(LP073CD2B) UYC093ALE31(LP093CD3B) UYC123ALE31(LP123CD3B) UYC153ALE31(LP153CD3B)
UYH073ALE21(LP073HD2B) UYH093ALE31(LP093HD3B) UYH123ALE31(LP123HD3B) UYH153ALE31(LP153HD3B)
UYC09EALE31(LP096CD3B) UYC12EALE31(LP126CD3B)
UYH09EALE31(LP096HD3B) UYH12EALE31(LP126HD3B)

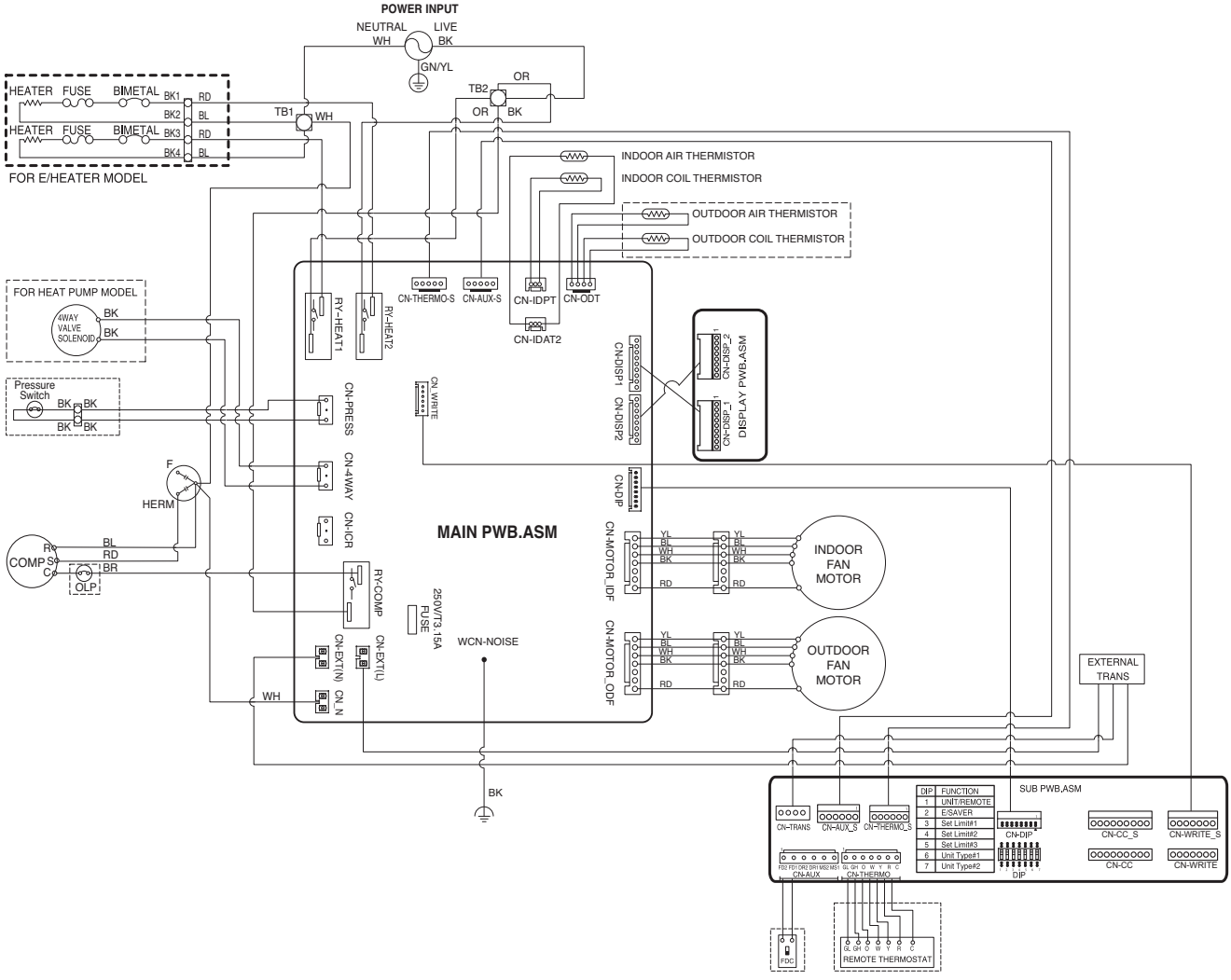

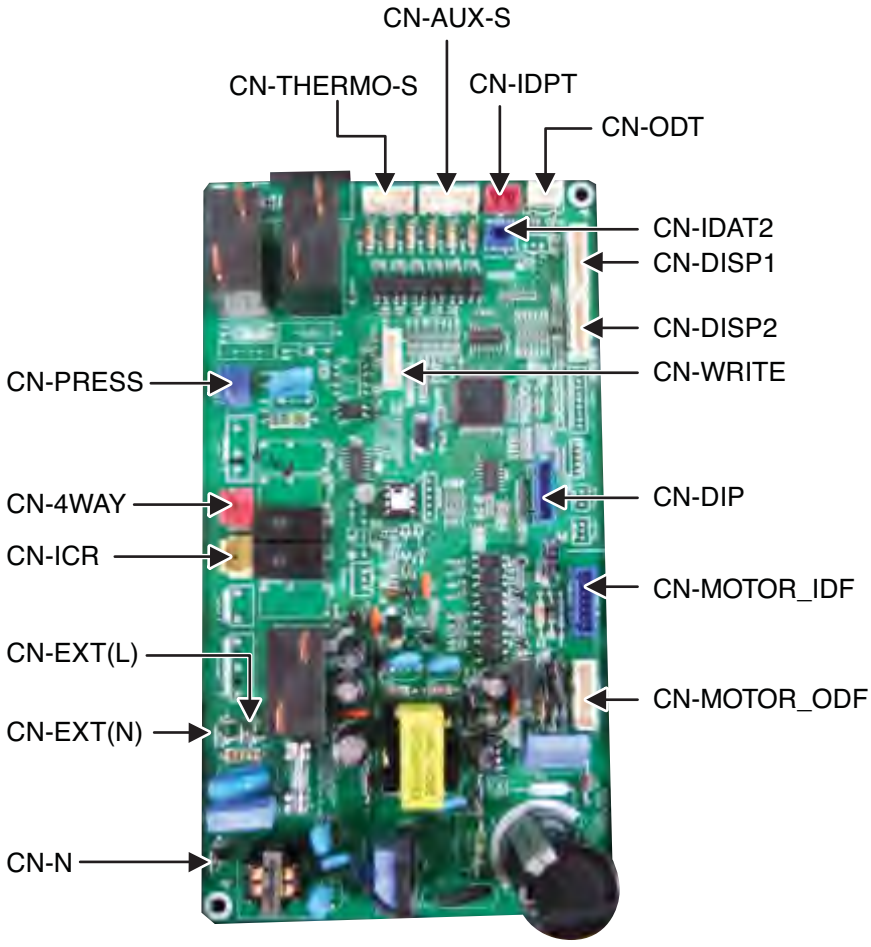
CN-AUX-S
CN-THERMO-S
CN-IDPT
CN-ODT
CN-IDAT2
CN-DISP1
CN-DISP2
CN-WRITE
CN-PRESS
CN-4WAY
CN-DIP
CN-ICR
CN-MOTOR_IDF
CN-EXT(L)
CN-MOTOR_ODF
CN-EXT(N)
CN-N

1.7 Capacity tables

Cooling Capacity

UYC073ALE21(LP073CD2B)

Indoor Air Temperature		Outdoor Air Temperature : DB°F								
		68			77			89.6		
WB°F	DB°F	TC	SHC	PI	TC	SHC	PI	TC	SHC	PI
57.2	68.0	5.92	5.80	0.36	5.80	5.88	0.43	5.52	6.00	0.50
60.8	71.6	6.91	5.65	0.37	6.76	5.71	0.44	6.44	5.82	0.51
64.4	77.0	7.71	5.51	0.37	7.55	5.56	0.44	7.19	5.66	0.52
66.2	80.6	8.07	5.44	0.38	7.90	5.49	0.45	7.52	5.58	0.52
71.6	86.0	8.85	5.26	0.38	8.67	5.30	0.46	8.26	5.38	0.53
75.2	89.6	9.19	5.15	0.39	8.99	5.19	0.46	8.57	5.25	0.54

Indoor Air Temperature		Outdoor Air Temperature : DB°F								
		95			104			109.4		
WB°F	DB°F	TC	SHC	PI	TC	SHC	PI	TC	SHC	PI
57.2	68.0	5.36	6.06	0.53	5.16	6.15	0.56	4.99	6.21	0.58
60.8	71.6	6.25	5.87	0.54	6.02	5.95	0.57	5.82	6.00	0.59
64.4	77.0	6.98	5.70	0.54	6.72	5.77	0.58	6.50	5.82	0.60
66.2	80.6	7.30	5.62	0.55	7.03	5.69	0.59	6.80	5.73	0.61
71.6	86.0	8.01	5.41	0.56	7.71	5.46	0.60	7.46	5.49	0.62
75.2	89.6	8.31	5.28	0.57	8.00	5.33	0.60	7.74	5.36	0.62

UYC093ALE31(LP093CD3B)

Indoor Air Temperature		Outdoor Air Temperature : DB°F								
		68			77			89.6		
WB°F	DB°F	TC	SHC	PI	TC	SHC	PI	TC	SHC	PI
57.2	68.0	7.71	7.43	0.49	7.54	7.52	0.58	7.19	7.67	0.67
60.8	71.6	8.99	7.23	0.50	8.80	7.31	0.59	8.39	7.45	0.69
64.4	77.0	10.03	7.04	0.50	9.82	7.12	0.60	9.36	7.24	0.70
66.2	80.6	10.50	6.96	0.51	10.28	7.03	0.61	9.79	7.14	0.71
71.6	86.0	11.52	6.72	0.52	11.28	6.78	0.61	10.75	6.88	0.72
75.2	89.6	11.96	6.59	0.53	11.70	6.64	0.62	11.15	6.72	0.73

Indoor Air Temperature		Outdoor Air Temperature : DB°F								
		95			104			109.4		
WB°F	DB°F	TC	SHC	PI	TC	SHC	PI	TC	SHC	PI
57.2	68.0	6.97	7.75	0.71	6.71	7.87	0.76	6.49	7.94	0.78
60.8	71.6	8.14	7.51	0.72	7.83	7.62	0.77	7.58	7.68	0.79
64.4	77.0	9.08	7.29	0.73	8.74	7.39	0.78	8.45	7.44	0.80
66.2	80.6	9.50	7.19	0.75	9.15	7.28	0.79	8.85	7.33	0.82
71.6	86.0	10.43	6.92	0.75	10.04	6.99	0.80	9.71	7.03	0.83
75.2	89.6	10.82	6.76	0.77	10.42	6.82	0.81	10.08	6.85	0.84

Symbol

DB : Dry Bulb Temperature [°F]
WB : Wet Bulb Temperature [°F]
TC : Total Capacity [kBtu/h]
SHC : Sensible Heating Capacity [kBtu/h]
PI : Power Input [kW]
(Comp.+ indoor fan motor + outdoor fan motor)

Notes

1. All capacities are net, evaporator fan motor heat is deducted.
2. Indicates nominal capacity.
3. Direct interpolation is permissible. Do not extrapolate

UYC123ALE31(LP123CD3B)

Indoor Air Temperature		Outdoor Air Temperature : DB°F								
		68			77			89.6		
WB°F	DB°F	TC	SHC	PI	TC	SHC	PI	TC	SHC	PI
57.2	68.0	9.89	9.38	0.67	9.69	9.49	0.80	9.23	9.69	0.93
60.8	71.6	11.55	9.13	0.68	11.30	9.23	0.81	10.77	9.40	0.94
64.4	77.0	12.88	8.89	0.69	12.61	8.99	0.82	12.02	9.14	0.96
66.2	80.6	13.48	8.79	0.70	13.20	8.87	0.83	12.58	9.02	0.97
71.6	86.0	14.80	8.49	0.71	14.48	8.56	0.85	13.80	8.68	0.99
75.2	89.6	15.36	8.32	0.72	15.03	8.38	0.86	14.32	8.49	1.00

Indoor Air Temperature		Outdoor Air Temperature : DB°F								
		95			104			109.4		
WB°F	DB°F	TC	SHC	PI	TC	SHC	PI	TC	SHC	PI
57.2	68.0	8.95	9.78	0.98	8.62	9.94	1.04	8.34	10.03	1.07
60.8	71.6	10.45	9.48	0.99	10.06	9.62	1.06	9.73	9.70	1.09
64.4	77.0	11.66	9.21	1.01	11.22	9.33	1.07	10.86	9.39	1.11
66.2	80.6	12.20	9.08	1.03	11.75	9.19	1.09	11.36	9.25	1.13
71.6	86.0	13.39	8.74	1.04	12.89	8.83	1.10	12.47	8.87	1.14
75.2	89.6	13.89	8.54	1.05	13.38	8.61	1.12	12.94	8.65	1.16

UYC153ALE31(LP153CD3B)

Indoor Air Temperature		Outdoor Air Temperature : DB°F								
		68			77			89.6		
WB°F	DB°F	TC	SHC	PI	TC	SHC	PI	TC	SHC	PI
57.2	68.0	12.25	10.79	0.88	11.99	10.92	1.04	11.42	11.15	1.22
60.8	71.6	14.29	10.50	0.89	13.99	10.62	1.06	13.33	10.82	1.24
64.4	77.0	15.94	10.23	0.91	15.61	10.34	1.08	14.87	10.52	1.26
66.2	80.6	16.69	10.11	0.92	16.33	10.21	1.09	15.56	10.38	1.28
71.6	86.0	18.31	9.77	0.94	17.93	9.85	1.11	17.08	9.99	1.29
75.2	89.6	19.01	9.57	0.95	18.60	9.64	1.13	17.73	9.77	1.31

Indoor Air Temperature		Outdoor Air Temperature : DB°F								
		95			104			109.4		
WB°F	DB°F	TC	SHC	PI	TC	SHC	PI	TC	SHC	PI
57.2	68.0	11.08	11.26	1.28	10.67	11.43	1.36	10.32	11.54	1.41
60.8	71.6	12.93	10.91	1.30	12.45	11.07	1.39	12.04	11.16	1.43
64.4	77.0	14.43	10.60	1.32	13.89	10.73	1.41	13.44	10.81	1.45
66.2	80.6	15.10	10.45	1.35	14.54	10.58	1.43	14.06	10.65	1.48
71.6	86.0	16.57	10.05	1.36	15.96	10.16	1.45	15.43	10.21	1.50
75.2	89.6	17.20	9.82	1.38	16.56	9.91	1.47	16.02	9.96	1.52

Symbol

DB : Dry Bulb Temperature [°F]
WB : Wet Bulb Temperature [°F]
TC : Total Capacity [kBtu/h]
SHC : Sensible Heating Capacity [kBtu/h]
PI : Power Input [kW]
(Comp.+ indoor fan motor + outdoor fan motor)

Notes

1. All capacities are net, evaporator fan motor heat is deducted.
2. Indicates nominal capacity.
3. Direct interpolation is permissible. Do not extrapolate

UYH073ALE21(LP073HD2B)

Indoor Air Temperature		Outdoor Air Temperature : DB°F								
		68			77			89.6		
WB°F	DB°F	TC	SHC	PI	TC	SHC	PI	TC	SHC	PI
57.2	68.0	5.92	5.91	0.36	5.80	5.98	0.43	5.52	6.11	0.50
60.8	71.6	6.91	5.75	0.37	6.76	5.82	0.44	6.44	5.92	0.51
64.4	77.0	7.71	5.60	0.37	7.55	5.66	0.44	7.19	5.76	0.52
66.2	80.6	8.07	5.54	0.38	7.90	5.59	0.45	7.52	5.68	0.52
71.6	86.0	8.85	5.35	0.38	8.67	5.40	0.46	8.26	5.47	0.53
75.2	89.6	9.19	5.24	0.39	8.99	5.28	0.46	8.57	5.35	0.54

Indoor Air Temperature		Outdoor Air Temperature : DB°F								
		95			104			109.4		
WB°F	DB°F	TC	SHC	PI	TC	SHC	PI	TC	SHC	PI
57.2	68.0	5.36	6.16	0.53	5.16	6.26	0.56	4.99	6.32	0.58
60.8	71.6	6.25	5.97	0.54	6.02	6.06	0.57	5.82	6.11	0.59
64.4	77.0	6.98	5.80	0.54	6.72	5.88	0.58	6.50	5.92	0.60
66.2	80.6	7.30	5.72	0.55	7.03	5.79	0.59	6.80	5.83	0.61
71.6	86.0	8.01	5.51	0.56	7.71	5.56	0.60	7.46	5.59	0.62
75.2	89.6	8.31	5.38	0.57	8.00	5.43	0.60	7.74	5.45	0.62

UYH093ALE31(LP093HD3B)

Indoor Air Temperature		Outdoor Air Temperature : DB°F								
		68			77			89.6		
WB°F	DB°F	TC	SHC	PI	TC	SHC	PI	TC	SHC	PI
57.2	68.0	7.71	7.33	0.48	7.54	7.42	0.57	7.19	7.57	0.67
60.8	71.6	8.99	7.13	0.49	8.80	7.21	0.58	8.39	7.35	0.68
64.4	77.0	10.03	6.95	0.50	9.82	7.02	0.59	9.36	7.14	0.69
66.2	80.6	10.50	6.87	0.50	10.28	6.94	0.60	9.79	7.05	0.70
71.6	86.0	11.52	6.64	0.51	11.28	6.69	0.61	10.75	6.79	0.71
75.2	89.6	11.96	6.50	0.52	11.70	6.55	0.61	11.15	6.63	0.72

Indoor Air Temperature		Outdoor Air Temperature : DB°F								
		95			104			109.4		
WB°F	DB°F	TC	SHC	PI	TC	SHC	PI	TC	SHC	PI
57.2	68.0	6.97	7.65	0.70	6.71	7.77	0.75	6.49	7.84	0.77
60.8	71.6	8.14	7.41	0.71	7.83	7.52	0.76	7.58	7.58	0.78
64.4	77.0	9.08	7.20	0.72	8.74	7.29	0.77	8.45	7.34	0.79
66.2	80.6	9.50	7.10	0.74	9.15	7.18	0.78	8.85	7.23	0.81
71.6	86.0	10.43	6.83	0.74	10.04	6.90	0.79	9.71	6.94	0.82
75.2	89.6	10.82	6.67	0.76	10.42	6.73	0.80	10.08	6.76	0.83

Symbol

DB : Dry Bulb Temperature [°F]
WB : Wet Bulb Temperature [°F]
TC : Total Capacity [kBtu/h]
SHC : Sensible Heating Capacity [kBtu/h]
PI : Power Input [kW]
(Comp.+ indoor fan motor + outdoor fan motor)

Notes

1. All capacities are net, evaporator fan motor heat is deducted.
2. Indicates nominal capacity.
3. Direct interpolation is permissible. Do not extrapolate

UYH123ALE31(LP123HD3B)

Indoor Air Temperature		Outdoor Air Temperature : DB°F								
		68			77			89.6		
WB°F	DB°F	TC	SHC	PI	TC	SHC	PI	TC	SHC	PI
57.2	68.0	9.89	10.04	0.67	9.69	10.17	0.80	9.23	10.38	0.93
60.8	71.6	11.55	9.78	0.68	11.30	9.89	0.81	10.77	10.07	0.94
64.4	77.0	12.88	9.53	0.69	12.61	9.63	0.82	12.02	9.79	0.96
66.2	80.6	13.48	9.41	0.70	13.20	9.51	0.83	12.58	9.66	0.97
71.6	86.0	14.80	9.10	0.71	14.48	9.17	0.85	13.80	9.30	0.99
75.2	89.6	15.36	8.91	0.72	15.03	8.98	0.86	14.32	9.09	1.00

Indoor Air Temperature		Outdoor Air Temperature : DB°F								
		95			104			109.4		
WB°F	DB°F	TC	SHC	PI	TC	SHC	PI	TC	SHC	PI
57.2	68.0	8.95	10.48	0.98	8.62	10.65	1.04	8.34	10.74	1.07
60.8	71.6	10.45	10.16	0.99	10.06	10.30	1.06	9.73	10.39	1.09
64.4	77.0	11.66	9.87	1.01	11.22	9.99	1.07	10.86	10.06	1.11
66.2	80.6	12.20	9.73	1.03	11.75	9.85	1.09	11.36	9.91	1.13
71.6	86.0	13.39	9.36	1.04	12.89	9.46	1.10	12.47	9.51	1.14
75.2	89.6	13.89	9.14	1.05	13.38	9.23	1.12	12.94	9.27	1.16

UYH153ALE31(LP153HD3B)

Indoor Air Temperature		Outdoor Air Temperature : DB°F								
		68			77			89.6		
WB°F	DB°F	TC	SHC	PI	TC	SHC	PI	TC	SHC	PI
57.2	68.0	12.25	10.79	0.88	11.99	10.92	1.04	11.42	11.15	1.22
60.8	71.6	14.29	10.50	0.89	13.99	10.62	1.06	13.33	10.82	1.24
64.4	77.0	15.94	10.23	0.91	15.61	10.34	1.08	14.87	10.52	1.26
66.2	80.6	16.69	10.11	0.92	16.33	10.21	1.09	15.56	10.38	1.28
71.6	86.0	18.31	9.77	0.94	17.93	9.85	1.11	17.08	9.99	1.29
75.2	89.6	19.01	9.57	0.95	18.60	9.64	1.13	17.73	9.77	1.31

Indoor Air Temperature		Outdoor Air Temperature : DB°F								
		95			104			109.4		
WB°F	DB°F	TC	SHC	PI	TC	SHC	PI	TC	SHC	PI
57.2	68.0	11.08	11.26	1.28	10.67	11.43	1.36	10.32	11.54	1.41
60.8	71.6	12.93	10.91	1.30	12.45	11.07	1.39	12.04	11.16	1.43
64.4	77.0	14.43	10.60	1.32	13.89	10.73	1.41	13.44	10.81	1.45
66.2	80.6	15.10	10.45	1.35	14.54	10.58	1.43	14.06	10.65	1.48
71.6	86.0	16.57	10.05	1.36	15.96	10.16	1.45	15.43	10.21	1.50
75.2	89.6	17.20	9.82	1.38	16.56	9.91	1.47	16.02	9.96	1.52

Symbol

DB : Dry Bulb Temperature [°F]
WB : Wet Bulb Temperature [°F]
TC : Total Capacity [kBtu/h]
SHC : Sensible Heating Capacity [kBtu/h]
PI : Power Input [kW]
(Comp.+ indoor fan motor + outdoor fan motor)

Notes

1. All capacities are net, evaporator fan motor heat is deducted.
2. Indicates nominal capacity.
3. Direct interpolation is permissible. Do not extrapolate

UYC09EALE31(LP096CD3B)

Indoor Air Temperature		Outdoor Air Temperature : DB°F								
		68			77			89.6		
WB°F	DB°F	TC	SHC	PI	TC	SHC	PI	TC	SHC	PI
57.2	68.0	7.87	7.52	0.49	7.70	7.61	0.59	7.34	7.77	0.68
60.8	71.6	9.18	7.32	0.50	8.99	7.40	0.60	8.56	7.54	0.69
64.4	77.0	10.24	7.13	0.51	10.03	7.21	0.60	9.55	7.33	0.70
66.2	80.6	10.72	7.05	0.52	10.49	7.12	0.61	10.00	7.23	0.72
71.6	86.0	11.76	6.81	0.53	11.52	6.87	0.62	10.97	6.96	0.73
75.2	89.6	12.21	6.67	0.53	11.95	6.72	0.63	11.39	6.81	0.74

Indoor Air Temperature		Outdoor Air Temperature : DB°F								
		95			104			109.4		
WB°F	DB°F	TC	SHC	PI	TC	SHC	PI	TC	SHC	PI
57.2	68.0	7.12	7.84	0.72	6.85	7.97	0.77	6.63	8.04	0.79
60.8	71.6	8.31	7.60	0.73	8.00	7.71	0.78	7.74	7.78	0.80
64.4	77.0	9.27	7.39	0.74	8.92	7.48	0.79	8.63	7.53	0.82
66.2	80.6	9.70	7.28	0.76	9.34	7.37	0.80	9.03	7.42	0.83
71.6	86.0	10.65	7.01	0.76	10.25	7.08	0.81	9.91	7.12	0.84
75.2	89.6	11.05	6.85	0.78	10.64	6.91	0.83	10.29	6.94	0.85

UYC12EALE31(LP126CD3B)

Indoor Air Temperature		Outdoor Air Temperature : DB°F								
		68			77			89.6		
WB°F	DB°F	TC	SHC	PI	TC	SHC	PI	TC	SHC	PI
57.2	68.0	9.89	9.87	0.67	9.69	9.99	0.80	9.23	10.20	0.93
60.8	71.6	11.55	9.61	0.68	11.30	9.71	0.81	10.77	9.90	0.94
64.4	77.0	12.88	9.36	0.69	12.61	9.46	0.82	12.02	9.62	0.96
66.2	80.6	13.48	9.25	0.70	13.20	9.34	0.83	12.58	9.49	0.97
71.6	86.0	14.80	8.94	0.71	14.48	9.01	0.85	13.80	9.14	0.99
75.2	89.6	15.36	8.76	0.72	15.03	8.82	0.86	14.32	8.93	1.00

Indoor Air Temperature		Outdoor Air Temperature : DB°F								
		95			104			109.4		
WB°F	DB°F	TC	SHC	PI	TC	SHC	PI	TC	SHC	PI
57.2	68.0	8.95	10.30	0.98	8.62	10.46	1.04	8.34	10.56	1.07
60.8	71.6	10.45	9.98	0.99	10.06	10.12	1.06	9.73	10.21	1.09
64.4	77.0	11.66	9.69	1.01	11.22	9.82	1.07	10.86	9.89	1.11
66.2	80.6	12.20	9.56	1.03	11.75	9.67	1.09	11.36	9.74	1.13
71.6	86.0	13.39	9.20	1.04	12.89	9.29	1.10	12.47	9.34	1.14
75.2	89.6	13.89	8.98	1.05	13.38	9.07	1.12	12.94	9.11	1.16

Symbol

DB : Dry Bulb Temperature [°F]
WB : Wet Bulb Temperature [°F]
TC : Total Capacity [kBtu/h]
SHC : Sensible Heating Capacity [kBtu/h]
PI : Power Input [kW]
(Comp.+ indoor fan motor + outdoor fan motor)

Notes

1. All capacities are net, evaporator fan motor heat is deducted.
2. Indicates nominal capacity.
3. Direct interpolation is permissible. Do not extrapolate

UYH09EALE31(LP096HD3B)

Indoor Air Temperature		Outdoor Air Temperature : DB°F								
		68			77			89.6		
WB°F	DB°F	TC	SHC	PI	TC	SHC	PI	TC	SHC	PI
57.2	68.0	7.87	7.52	0.49	7.70	7.61	0.59	7.34	7.77	0.68
60.8	71.6	9.18	7.32	0.50	8.99	7.40	0.60	8.56	7.54	0.69
64.4	77.0	10.24	7.13	0.51	10.03	7.21	0.60	9.55	7.33	0.70
66.2	80.6	10.72	7.05	0.52	10.49	7.12	0.61	10.00	7.23	0.72
71.6	86.0	11.76	6.81	0.53	11.52	6.87	0.62	10.97	6.96	0.73
75.2	89.6	12.21	6.67	0.53	11.95	6.72	0.63	11.39	6.81	0.74

Indoor Air Temperature		Outdoor Air Temperature : DB°F								
		95			104			109.4		
WB°F	DB°F	TC	SHC	PI	TC	SHC	PI	TC	SHC	PI
57.2	68.0	7.12	7.84	0.72	6.85	7.97	0.77	6.63	8.04	0.79
60.8	71.6	8.31	7.60	0.73	8.00	7.71	0.78	7.74	7.78	0.80
64.4	77.0	9.27	7.39	0.74	8.92	7.48	0.79	8.63	7.53	0.82
66.2	80.6	9.70	7.28	0.76	9.34	7.37	0.80	9.03	7.42	0.83
71.6	86.0	10.65	7.01	0.76	10.25	7.08	0.81	9.91	7.12	0.84
75.2	89.6	11.05	6.85	0.78	10.64	6.91	0.83	10.29	6.94	0.85

UYH12EALE31(LP126HD3B)

Indoor Air Temperature		Outdoor Air Temperature : DB°F								
		68			77			89.6		
WB°F	DB°F	TC	SHC	PI	TC	SHC	PI	TC	SHC	PI
57.2	68.0	9.89	9.87	0.67	9.69	9.99	0.80	9.23	10.20	0.93
60.8	71.6	11.55	9.61	0.68	11.30	9.71	0.81	10.77	9.90	0.94
64.4	77.0	12.88	9.36	0.69	12.61	9.46	0.82	12.02	9.62	0.96
66.2	80.6	13.48	9.25	0.70	13.20	9.34	0.83	12.58	9.49	0.97
71.6	86.0	14.80	8.94	0.71	14.48	9.01	0.85	13.80	9.14	0.99
75.2	89.6	15.36	8.76	0.72	15.03	8.82	0.86	14.32	8.93	1.00

Indoor Air Temperature		Outdoor Air Temperature : DB°F								
		95			104			109.4		
WB°F	DB°F	TC	SHC	PI	TC	SHC	PI	TC	SHC	PI
57.2	68.0	8.95	10.30	0.98	8.62	10.46	1.04	8.34	10.56	1.07
60.8	71.6	10.45	9.98	0.99	10.06	10.12	1.06	9.73	10.21	1.09
64.4	77.0	11.66	9.69	1.01	11.22	9.82	1.07	10.86	9.89	1.11
66.2	80.6	12.20	9.56	1.03	11.75	9.67	1.09	11.36	9.74	1.13
71.6	86.0	13.39	9.20	1.04	12.89	9.29	1.10	12.47	9.34	1.14
75.2	89.6	13.89	8.98	1.05	13.38	9.07	1.12	12.94	9.11	1.16

Symbol

DB : Dry Bulb Temperature [°F]
WB : Wet Bulb Temperature [°F]
TC : Total Capacity [kBtu/h]
SHC : Sensible Heating Capacity [kBtu/h]
PI : Power Input [kW]
(Comp.+ indoor fan motor + outdoor fan motor)

Notes

1. All capacities are net, evaporator fan motor heat is deducted.
2. Indicates nominal capacity.
3. Direct interpolation is permissible. Do not extrapolate

Heating Capacity

UYH073ALE21(LP073HD2B)

Indoor Air Temperature	Outdoor Air Temperature : DB°F							
	32		42.8		50		59	
DB°F	TC	PI	TC	PI	TC	PI	TC	PI
60.8	5.89	0.45	6.85	0.49	7.42	0.51	8.19	0.55
64.4	5.71	0.47	6.64	0.50	7.18	0.53	7.93	0.57
68.0	5.54	0.48	6.40	0.52	6.97	0.55	7.69	0.59
71.6	5.34	0.50	6.21	0.54	6.72	0.57	7.41	0.61
75.2	5.15	0.51	5.99	0.55	6.49	0.58	7.16	0.62

UYH093ALE31(LP093HD3B)

Indoor Air Temperature	Outdoor Air Temperature : DB°F							
	32		42.8		50		59	
DB°F	TC	PI	TC	PI	TC	PI	TC	PI
60.8	7.55	0.58	8.78	0.63	9.50	0.66	10.49	0.71
64.4	7.31	0.60	8.50	0.65	9.20	0.68	10.16	0.73
68.0	7.09	0.62	8.20	0.67	8.93	0.71	9.86	0.76
71.6	6.84	0.64	7.95	0.69	8.61	0.73	9.50	0.78
75.2	6.60	0.66	7.68	0.71	8.31	0.75	9.17	0.80

UYH123ALE31(LP123HD3B)

Indoor Air Temperature	Outdoor Air Temperature : DB°F							
	32		42.8		50		59	
DB°F	TC	PI	TC	PI	TC	PI	TC	PI
60.8	9.94	0.79	11.56	0.85	12.52	0.89	13.82	0.96
64.4	9.63	0.81	11.20	0.88	12.12	0.92	13.38	0.99
68.0	9.34	0.84	10.80	0.91	11.76	0.95	12.98	1.02
71.6	9.01	0.87	10.47	0.93	11.34	0.98	12.51	1.05
75.2	8.70	0.89	10.11	0.96	10.95	1.01	12.08	1.09

Symbol

DB : Dry Bulb Temperature [°F]
WB : Wet Bulb Temperature [°F]
TC : Total Capacity [kBtu/h]
PI : Power Input [kW]
(Comp.+ indoor fan motor + outdoor fan motor)

Notes

1. All capacities are net, evaporator fan motor heat is deducted.
2. Indicates nominal capacity.

UYH153ALE31(LP153HD3B)

Indoor Air Temperature	Outdoor Air Temperature : DB°F							
	32		42.8		50		59	
DB°F	TC	PI	TC	PI	TC	PI	TC	PI
60.8	12.34	1.10	14.35	1.19	15.53	1.25	17.14	1.34
64.4	11.95	1.14	13.89	1.23	15.04	1.29	16.60	1.38
68.0	11.59	1.17	13.40	1.27	14.59	1.33	16.10	1.43
71.6	11.17	1.21	12.99	1.31	14.06	1.38	15.52	1.47
75.2	10.79	1.25	12.55	1.35	13.58	1.42	14.99	1.52

UYH09EALE31(LP096HD3B)

Indoor Air Temperature	Outdoor Air Temperature : DB°F							
	32		42.8		50		59	
DB°F	TC	PI	TC	PI	TC	PI	TC	PI
60.8	7.83	0.60	9.10	0.65	9.85	0.68	10.87	0.73
64.4	7.58	0.62	8.81	0.67	9.54	0.70	10.53	0.75
68.0	7.35	0.64	8.50	0.69	9.26	0.73	10.22	0.78
71.6	7.09	0.66	8.24	0.71	8.92	0.75	9.85	0.80
75.2	6.84	0.68	7.96	0.73	8.61	0.77	9.51	0.83

UYH12EALE31(LP126HD3B)

Indoor Air Temperature	Outdoor Air Temperature : DB°F							
	32		42.8		50		59	
DB°F	TC	PI	TC	PI	TC	PI	TC	PI
60.8	10.13	0.78	11.78	0.84	12.75	0.88	14.07	0.95
64.4	9.81	0.80	11.40	0.87	12.35	0.91	13.63	0.98
68.0	9.52	0.83	11.00	0.90	11.98	0.94	13.22	1.01
71.6	9.17	0.86	10.67	0.92	11.55	0.97	12.74	1.04
75.2	8.86	0.88	10.30	0.95	11.15	1.00	12.31	1.07

Symbol

DB : Dry Bulb Temperature [°F]
WB : Wet Bulb Temperature [°F]
TC : Total Capacity [kBtu/h]
PI : Power Input [kW]
(Comp.+ indoor fan motor + outdoor fan motor)

Notes

1. All capacities are net, evaporator fan motor heat is deducted.
2. Indicates nominal capacity.

1.8 Electrical characteristics

Unit				Power		Compressor		Motor FLA	
Model	Hz	Voltage	Voltage range	MCA	MOP	RLA	LRA	IFM	OFM
UYC073ALE21(LP073CD2B)	60	208~230	Min : 187 Max : 253	14.9	15.0	2.9	16.0	0.36	0.36
UYC093ALE31(LP093CD3B)				19.5	20.0	3.7	19.0	0.36	0.36
UYC123ALE31(LP123CD3B)				19.5	20.0	5.0	27.0	0.36	0.36
UYC153ALE31(LP153CD3B)				19.5	20.0	6.55	38.6	0.36	0.36
UYH073ALE21(LP073HD2B)				14.9	15.0	2.9	16.0	0.36	0.36
UYH093ALE31(LP093HD3B)				19.5	20.0	4.0	19.0	0.36	0.36
UYH123ALE31(LP123HD3B)				19.5	20.0	5.0	26.0	0.36	0.36
UYH153ALE31(LP153HD3B)				19.5	20.0	6.55	38.6	0.36	0.36
UYC09EALE31(LP096CD3B)		265	Min : 239 Max : 292	17.9	15.0	3.3	20.0	0.36	0.36
UYC12EALE31(LP126CD3B)				17.9	15.0	4.4	22.0	0.36	0.36
UYH09EALE31(LP096HD3B)				17.9	15.0	3.3	20.0	0.36	0.36
UYH12EALE31(LP126HD3B)				17.9	15.0	4.4	22.0	0.36	0.36

Notes :

1. Voltage range Voltage supplied to the unit terminals should be within the minimum and maximum range.
2. Maximum allowable voltage unbalance between phase is 2 %.
3. Select wire spec. based on the larger value of MCA.
4. LRA & RLA is measured during each individual compressor test condition.
5. IFM & OFM is measured at unit test condition.
6. Recommended circuit breaker is ELCB (Earth Leakage circuit breaker)

MCA : Minimum Circuit Amperes (A)
MOP : Maximum rating over current protective device (A)
LRA : LRA Locked Rotor Ampere (A)
RLA : Rated Load Amperes (A)
OFM : Outdoor Fan Motor (W)
IFM : Indoor Fan Motor (W)
FLA : Full Load Amperes (A)

1.9 Operation range

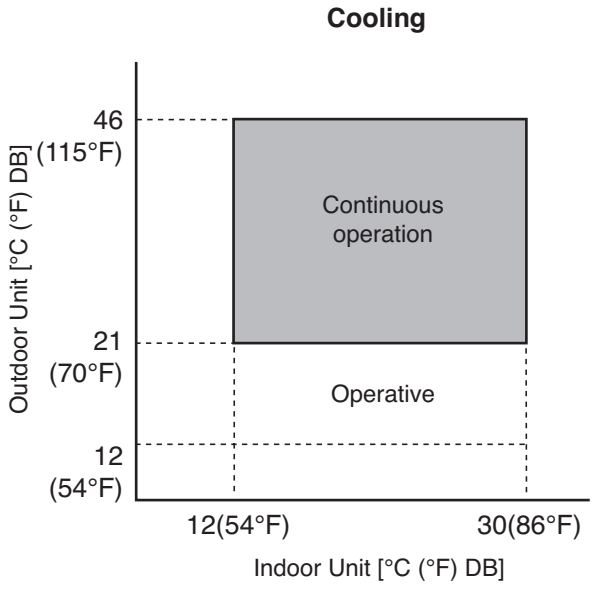

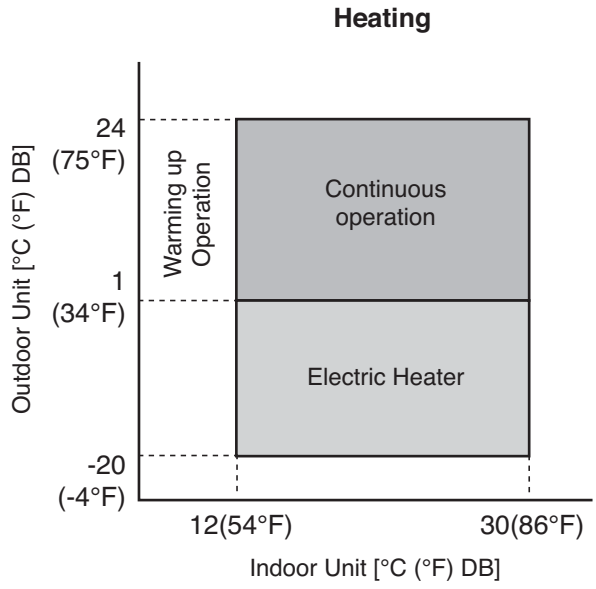

2. Control Device

2.1 Electronic Controls

The Electronic controls and the panel display is as shown below.

FAN SPEED

• Every time you push this button, it cycles through the settings as follows:
{High(F2) → Low(F1) → High(F2) → Low(F1)}

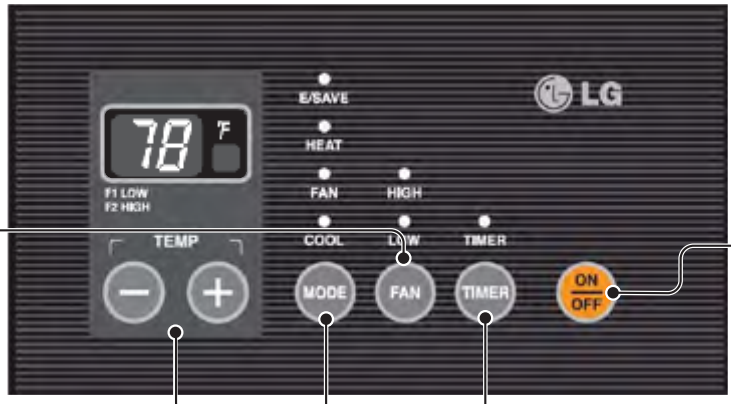

* For Cooling only models(for some specific regions), the "HEAT" option is not there in the panel display(escutcheon).

POWER

• To turn the air conditioner ON, push this button. To turn the air conditioner OFF, push the button again.
• This button takes priority over any other button.

MODE

- Push this button to cycle through the modes from COOL → FAN → HEAT → COOL.

- COOL
  • Fan runs continually for normal cooling operation.

- ENERGY SAVER
  • The fan stops when the compressor stops cooling. Approximately every 3 minutes the fan will turn on and the unit will check the room air temperature to determine if cooling is needed.

- FAN
  • Fan operation without heating or cooling.

- HEAT
  • Fan runs continually for normal heating operation.

TEMPERATURE SETTING

• Use this button to automatically control the temperature of the room.
The temperature can be set within a range of 54°F to 86°F by increments of 1°F.
• The setting appears in the display.

TIMER

- SHUT-OFF TIME
  • You will usually use shut-off time while you sleep.
  • If unit is running, use Timer to set number of hours until shut-off.
  • For your sleeping comfort, once Time is set, the Temperature setting will raise 2°F after 30 minutes, and once again after another 30 minutes.
  • Push Timer to cycle through the settings from 1 Hour → 2 Hours → ... → 12 Hours maximum.

Additional Controls

Additional controls can be seen after removing the front grille and the option cover of the control box.

To remove the front grille, pull out the bottom at both the sides and then lift up the grille as shown in the figure on the right.

And to install the front grille back to it's original position, place the tabs over the top of the unit and push the bottom of the front grille until the clips snap into place.

Now the additional controls are located behind the option cover of the control box. The standard settings are in the "OFF" position as shown in the figure below. The authorized personnel has to check the switches and ensure that the switches are in the desired position.

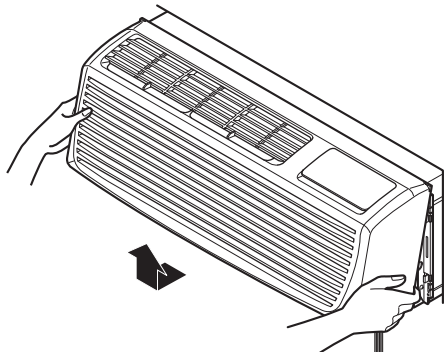

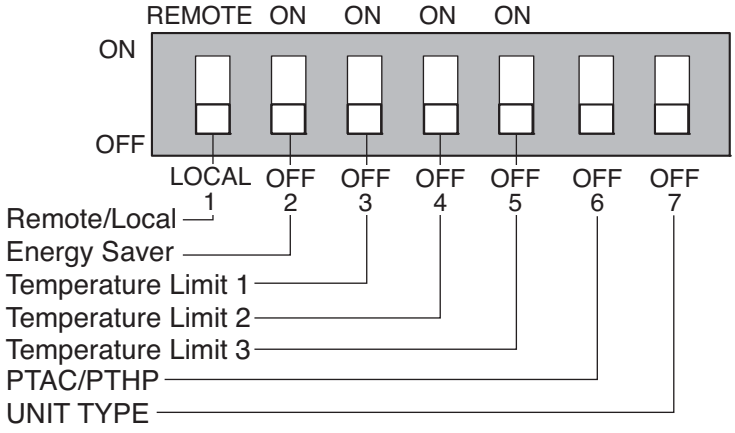

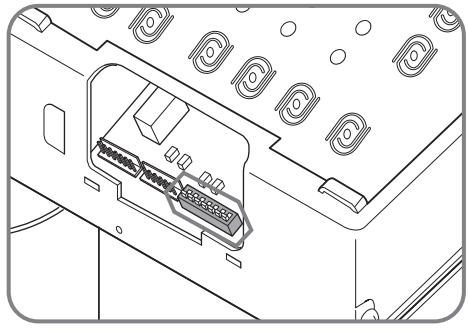

Here in the figure above the three Temperature limit switches (Temperature Limit 1, Temperature Limit 2 and Temperature Limit 3) can provide various temperature ranges of operation by means of different combinations of dip switches as shown in the Table below. These temperature limits prevent overcooling and over heating, by limiting the lowest temperature for cooling and by limiting the highest temperature for heating respectively, thereby reducing energy costs.

Temperature Limit #1	Temperature Limit #2	Temperature Limit #3	Cooling Operation		Heating Operation	
			Lowest Temp.	Highest Temp.	Lowest Temp.	Highest Temp.
OFF	OFF	OFF	54°F (12.2°C)	86°F (30.0°C)	54°F (12.2°C)	86°F (30.0°C)
ON	OFF	OFF	56°F (13.3°C)	86°F (30.0°C)	54°F (12.2°C)	84°F (28.9°C)
OFF	ON	OFF	58°F (14.4°C)	86°F (30.0°C)	54°F (12.2°C)	82°F (27.8°C)
ON	ON	OFF	60°F (15.5°C)	86°F (30.0°C)	54°F (12.2°C)	80°F (26.7°C)
OFF	OFF	ON	62°F (16.6°C)	86°F (30.0°C)	54°F (12.2°C)	78°F (25.5°C)
ON	OFF	ON	64°F (17.7°C)	86°F (30.0°C)	54°F (12.2°C)	76°F (24.4°C)
OFF	ON	ON	66°F (18.9°C)	86°F (30.0°C)	54°F (12.2°C)	74°F (23.3°C)
ON	ON	ON	68°F (20.0°C)	86°F (30.0°C)	54°F (12.2°C)	72°F (22.2°C)

#6	#7	Unit Type
OFF	OFF	Cooling+Electric Heater+Heat Pump
OFF	ON	Cooling+Electric Heater
ON	OFF	Heat Pump Only
ON	ON	Cooling Only

Note:

This Temperature limit option is not available with the Remote Wall Thermostat.

• Remote/Local Control

When remote/local switch #1 is on, it allow the unit to operate by the Remote Wall Thermostat.
The unit control by knobs are not available.

• Energy Saver

The energy saver switch #2 is on. This switch is set at cycle fan to provide continuous fan operation in cool or heat modes. When the switch is off the continuous fan allows continuous circulation of room air and make the more balanced temperature of the room. When the switch is on, the fan is on or off with the compressor or with the heater.

• Front Desk Control

When the pair wire is connected to the connector FD2 and FD1, the unit can be turned ON or OFF with a switch located at the Front Desk Control panel. When the front desk switch is ON, the fan operates according to the setting without working compressor and heater. When the front desk switch is OFF, the unit can operate according to the setting of controls.

Wire # AWG	Maximum Length
#22	600 ft (180 m)
#20	900 ft (270 m)
#18	1500 ft (450 m)
#16	2000 ft (610 m)

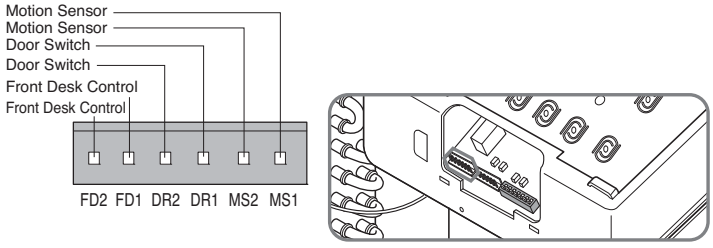

(Molex Housing Spec 396-06V)

Note : The following figures show wiring schematics for heat pump and straight cool units with electric heat, respectively.

Wiring Schematic for Remote Heat Pump

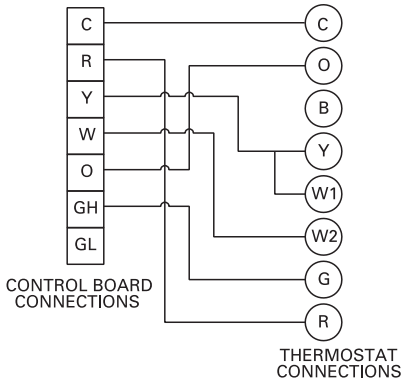

Wiring Schematic for Straight Cool Unit.

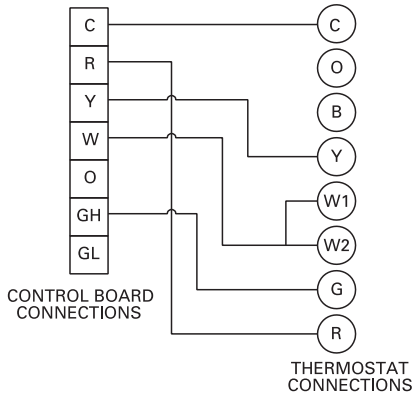

Remote Wall Thermostat

When the wires are connected, the unit will be controlled by a remote wall thermostat.

The thermostat connections supply the 24 Volt AC. When you install the digital/electronic thermostat, you must set it to 24 Volt AC. See the installation instruction in this manual for the Remote Wall Thermostat.

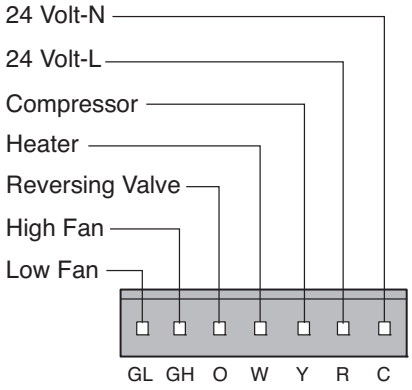

(Molex Housing Spec 396-07V)

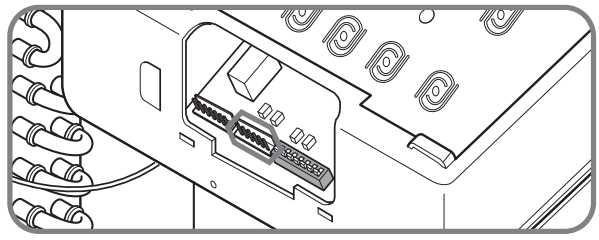

FUNCTION:

If the unit has a malfunction, a green OPERATION LED located on the Display PCB used by the unit to indicate the errors.

USE:

If the customer has to register a complaint to the service center, he can be very clear about registering the complaint that what is happening & by referring the user's manual the customer can clearly define the problem.
So that the engineer should go fully prepared with the prescribed tools to be used regarding that problem. It also keeps the customer aware about the unit.
Here are some of the problems defined below for which the LED indicates by flashing.
The errors are the mentioned which is as follows:

• Electrical Controls

Fault Codes	Description of Inspection	Cause of Error	Check Point
CH 01	Indoor Air Thermistor Error	Indoor air temperature sensor fault is occurred by indoor air temperature ≤ -35°C or the indoor air temperature ≥ 100°C	• Check the error after change sensor. • Check the insertion of PCB Connector Wafer.
CH 02	Indoor Coil Thermistor Error	Indoor pipe temperature sensor fault is occurred by indoor pipe temperature ≤ -35°C or the indoor pipe temperature ≥ 100°C	• Check the error after change sensor. • Check the insertion of PCB Connector Wafer.
CH 07	Themostat Wiring Error	During operating Remote mode, if PTAC receives control commands that can not be drive from Themostat, Themostat error occurred.	• Check the connection with Themostat comparing with manual.
CH 09	EEPROM Check Sum Error	EEPROM Check Sum Error is occurred by unmatching between the original checksum and the calculated checksum.	• Check the insertion of EEPROM. • Unplug and plug the power code
CH 10	Indoor Fan Error	Indoor fan lock error is occurred by no feedback signal from Hall sensor located BLDC Motor in 50 seconds delay time or feedback signal lower than 50RPM. (Applied in model using BLDC Motor)	• Check the insertion of BLDC Connector. • Check whether the output voltage between the two terminals 4-5pins in CN-MOTOR-ODF is 15V. • Check whether the output voltage between the two terminals 4-6pins is over 2V. • Check whether the output voltage between the two terminals 4-7pins is exist or not.
CH 34	High Pressure Switch Error	If opening high pressure switch for 65 miliseconds is generated more than 10 times in 1 hour, High Pressure Switch Error occurred.	• Check the existence of short key between CN-PRESS. • Check the insertion of PCB Connector Wafer.
CH 44	Outdoor Air Thermistor Error (PTHP Only)	Outdoor air temperature sensor fault is occurred by outdoor air temperature ≤ -35°C or the indoor air temperature ≥ 100°C	• Check the error after change sensor. • Check the insertion of PCB Connector Wafer.
CH 45	Outdoor Coil Thermistor Error (PTHP Only)	Outdoor pipe temperature sensor fault is occurred by outdoor pipe temperature ≤ -35°C or the outdoor pipe temperature ≥ 100°C	• Check the error after change sensor. • Check the insertion of PCB Connector Wafer.
CH 67	Outdoor Fan Error	Outdoor fan lock error is occurred by no feedback signal from Hall sensor located BLDC Motor in 50 seconds delay time or feedback signal lower than 50RPM. (Applied in model using BLDC Motor)	• Check the insertion of BLDC Connector. • Check whether the output voltage between the two terminals 4-5pins in CN-MOTOR-ODF is 15V. • Check whether the output voltage between the two terminals 4-6pins is over 2V. • Check whether the output voltage between the two terminals 4-7pins is exist or not.

Note:

• **Overheating Protection**

This feature prevents melting of unit by electrical heater located inside of the unit at the remote mode (when the unit is connected with wall thermostat). LED on the control panel displays "OP"

• **Freeze Protection**

This feature prevents freezing of room at low temperature. LED on the control panel displays "FP"

Part 3 Design and Installation

1 General installation procedure 51

2 Installation of unit 52

2.1 Safety precautions 52

2.2 Points for explanation about operations 55

2.3 Selecting installation site for the unit 55

2.4 Installation of Unit 56

2.5 Wall sleeve installation 58

1. General Installation Procedure

Installation Procedure	Remarks
Determination of work scope	Check and confirm required load calculation, model selection etc…
Selection of suitable location for unit	The base or the foundation of the Air-Conditioner should be firm and vibration proof and air-flow should not be restricted on either side of the unit - front and the back.
Installation of Wall sleeve	Check out the Wall opening to make sure the Wall sleeve fits properly.
Installation of indoor unit	Check the size of the selected model and make sure the fitting is made correctly.
Drain pipe work	Make sure the drain pipe is big enough and adjust it to a downward gradient.
Insulation works	The Air-Conditioner supporting parts should secure firmly to the wood, masonry and metal.
Fit Outer Grille	The Air Conditioner should be protected from physical contact with animals or any external object.
Transfer charge to customer	Educate the customer or the operator on how to operate the Air-Conditioner and the utility of the manuals.

2. Installation of unit

2.1 Safety precautions

To prevent injury to the user or other people and property damage, the following instructions must be followed.

■ Incorrect operation due to ignoring instructions will cause harm or damage. The seriousness is classified by the following indications.

■ Because of the weight of the product, it is recommended that you have a helper to assist in the installation.

⚠WARNING	This symbol indicates the possibility of death or serious injury.
⚠CAUTION	This symbol indicates the possibility of injury or damage to properties only.

■ Meanings of symbols used in this manual are as shown below.

⃠	**Be sure not to do.**
❗	**Be sure to follow the instruction.**

⚠WARNING

Do not use a damaged power cord, plug or loose socket.
- Otherwise there is risk of fire or electric shock.

Always plug onto a grounded outlet.
- Otherwise there is risk of fire or electric shock.

Do not extend or modify the power cord length.
- Otherwise there is risk of fire or electric shock due to heat generation.

Do not install, remove or reinstall the unit by yourself.
- Otherwise there is risk of fire, electric shock, explosion or injury.

Be cautious when unpacking and installing the product.
- Sharp edges could cause injury. Especially be careful of the case edges and the fins on the condenser and evaporator.

Do not store or use flammable gas or combustibles near the Air-Conditioner.
- Otherwise there is risk of fire, explosion or failure of product.

Be sure the installation area does not deteriorate with time.
- If the base collapses then the Air- Conditioner might fall causing property damage, product failure and personal injury.

Do not place heavy object on the power cord and take care that the cord is not pressed.
- Otherwise there is a danger of fire or electric shock.

Do not share the outlet with other appliances.
- Otherwise there is a risk of fire or electric shock due to heat generation.

While unplugging, hold the head of the plug and do not touch it with wet hands.
- Otherwise there is a risk of fire or electric shock.

Do not place the power cord near a heater.
- Otherwise there is a risk of fire or electric shock.

Do not allow water to run into electric parts.
- Otherwise there is a risk of electric shock or failure of the unit.

Use a soft cloth to clean. Do not use wax, thinner or a strong detergent.
- Otherwise the appearance of the Air-Conditioner may deteriorate, change color or develop flaws on the surface.

Unplug the unit if any strange sound, odor or smoke comes out of it.
- Otherwise there is a risk of fire or electric shock.

Do not open the inlet grille of the product during operation.
- Otherwise it may cause electric shock and failure.

If water enters the product, turn off the power switch, remove the power plug from the socket and contact the service center immediately.
- Otherwise it may cause electric shock and failure of the product.

Ensure proper ventilation in the room when using this appliance together with a stove.
- Otherwise there may be a shortage of oxygen.

Before cleaning the unit turn off the power to the unit.
- The fan blows at a high speed and may cause injury. Also the appliance may cause electric shock.

Turn off the main power switch when the unit is not used for a long time.
- We can prevent accidental startup and thereby prevent injury.

Do not operate or stop the unit by inserting or pulling out the power plug.
- Otherwise it may cause electric shock or fire due to heat generation.

Do not use a damaged power cord and do not use an unspecified power cord.
- Otherwise it may cause electric shock or fire.

Do not operate the unit with wet hands or in a damp environment.
- Otherwise it may cause electric shock or fire.

Always hold the plug by the head while plugging or unplugging it onto the socket.
- Otherwise it may cause electric shock or it may damage the power cord.

When there is a gas leakage, open the windows for ventilation before operating the unit.
- There is a risk of fire or explosion.

Take care not to touch the metal parts of the Air-Conditioner while removing the filter.
- Presence of sharp metal parts may cause injury.

During installation and un installation always contact the dealer of an Authorized service center.
- Otherwise there is a risk of fire, electric shock, explosion or injury.

Be sure only to use those parts which are listed in the service parts list. Never attempt to modify the equipment.
- Use of parts not listed in the service list can cause an electrical shock, excessive heat generation or fire.

Safely dispose off the packing materials.
- Things like screws, nails, batteries, etc….can cause injury to a person. Take care to throw away the plastic packaging bags so that children may not play with them.

Do not touch, operate or repair the product with wet hands.
- Otherwise there is a risk of electric shock or fire.

Do not allow water to run into electric parts. Install the unit away from water sources.
- Otherwise there is a risk of fire, electric shock or failure of the product.

If any strange sound, smell or smoke comes out of the product, immediately disconnect the power supply and contact the nearest service center.
- Otherwise there is a risk of fire, electric shock or failure of the product.

Do not use the socket if it is loose or damaged.
- Otherwise it may cause shock or electric fire.

Keep fire arms away from the unit.
- Otherwise it may cause fire.

Do not use the power cord close to heating tools.
- Otherwise it may cause an electric shock or fire.

Do not disassemble or modify the products randomly.
- Otherwise it may cause an electric shock or failure of the product.

⚠ CAUTION

Install the product in such a way that the noise or hot wind from the outdoor unit may not cause any disturbance to neighbors.
- Otherwise there may be disputes with neighbors.

During installation the unit should be horizontally leveled.
- Otherwise it may cause vibration or water leakage.

Do not allow direct exposure of pet animals and house plants to air flow from the unit.
- Otherwise it may cause injury to them.

Do not block the flow of air into the inlet and the outlet.
- Otherwise it may lead to failure of the product.

Use a soft cloth to clean. Do not use wax, thinner or a strong detergent.
- Otherwise the appearance of the air conditioner may deteriorate, change color and develop flaws on the surface.

Do not step on the unit and do not place anything above it.
- Otherwise the unit may fall and cause personal injury.

Always place the filter securely and clean it every two weeks.
- Operation without filters may cause the unit to fail.

Do not drink water drained by the air-conditioner.
- The drained water contains contaminants and can make you sick.

Be cautious so as not to touch the sharp edges during installation.
- Otherwise it may cause injury.

Avoid excessive cooling and ventilate the room at times.
- Otherwise it may cause personal injury.

Do not try to lift the unit alone.
- Avoid personal injury.

Do not install the product where it is exposed to sea wind (salt spray) directly.
- Otherwise it may corrode the product. Corrosion, particularly on the condenser and evaporator fins, could cause product malfunction or inefficient operation.

Install the drain hose so as to ensure that the water is drained properly.
- Otherwise there might be water leakage.

Replace all the batteries in the remote control with new ones of the same type.
Do not mix old and new batteries or different type of batteries.
- Otherwise there is a risk of fire or explosion.

If the liquid from the batteries gets onto your skin or clothes, wash it well with clean water. Do not use the remote controller if the batteries have leaked.
- Otherwise the chemicals in the batteries may cause burns or other health hazards.

Do not use the product for purposes such as preserving foods, works of art, etc…It is a consumer air conditioner not a precision refrigeration system.
- Otherwise there is risk of damage or loss to property.

Do not recharge or disassemble the batteries. Do not dispose off batteries in fire.
- Otherwise the batteries may burn or explode.

Do not clean the air conditioner using water.
- Water may enter the unit and degrade the insulation. Hence, it may cause an electric shock.

Ventilate well when used near a stove.
- Otherwise there may be a lack of Oxygen in the room.

Do not put pets or house plants where it is exposed to direct air-flow.
- It is injurious to the health of the pet and the plant.

2.2 Points for explanation about operations

The items listed under the WARNING and CAUTION list in the operation manual are the items pertaining to possibilities for bodily injury and material damage in addition to the general usage of the product. Accordingly, it is necessary that you make a full explanation about the described contents and also ask your customers to read the owners manual.

NOTE **to the installer**

Be sure to instruct customers how to properly operate the unit (especially cleaning filters, operating different functions and adjusting the temperature) by having them carry out operations themselves while looking at the manual.

- Be sure to read this manual before installing the indoor unit.
- Entrust the duty of installation to the place of purchase or an authorized serviceman. Improper installation could lead to damage of the product, bodily injury , electric shock or fire.
- Use parts only provided along with the unit or parts satisfying required specifications.
  Unspecified parts could cause the unit to fall out of place, or could lead to leaks and in the worst cases, electric shock or fire.

2.3 Selecting installation site for the unit

Select an installation site where the following conditions are fulfilled and that meet your customers approval.

1) Location should be strong enough to bear the weight of the unit.
2) Location should be accessible to inspection and service in future.
3) Location should allow suitable gradient for the drainage of water.
4) Location free from electrical noise.
5) Location allowing optimum air distribution without restricting air flow.
6) Location having no risk of flammable gas leakage.
7) Location free from any machinery emitting electromagnetic waves which may disturb the control system thus causing the unit to malfunction.
8) Location should be free from flammable gases, carbon fiber or ignitable dust suspensions in the air or in areas where volatile flames like gasoline and thinner are handled. Operating the unit in such conditions may lead to fire.
9) Finally conform to local rules and regulations for air conditioner installation.

2.4 Installation of unit

The PTAC and its components are as shown below.

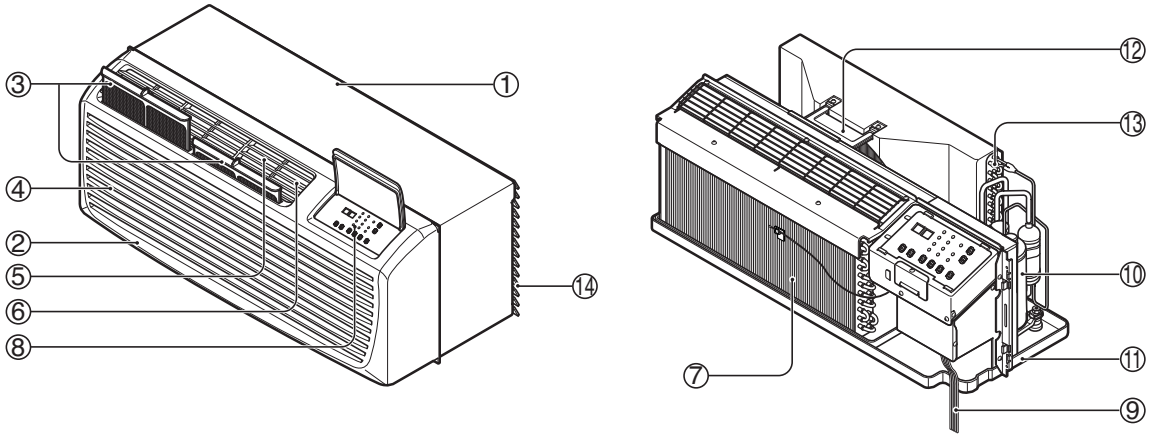

1. WALL SLEEVE
2. FRONT GRILLE
3. AIR FILTER
4. AIR INTAKE
5. AIR DISCHARGE
6. VERTICAL AIR DEFLECTOR (HORIZONTAL LOUVER)
7. EVAPORATOR
8. CONTROL PANEL
9. POWER CORD
10. COMPRESSOR
11. BASE PAN
12. BRACE
13. CONDENSER
14. OUTDOOR GRILLE (ARCHITECTURAL GRILLE)

Use the correct wall sleeve and outdoor grille

This unit is designed to be installed in the insulated wall sleeve. When you place the unit into the existing sleeve, the wall sleeve used to mount the new unit must be in good structural condition and have the outdoor grille that securely attaches to the sleeve or the flange of the sleeve to secure the new air conditioner.

With the LG sleeve, you can maintain the best performance of the new air conditioner.
If you keep the existing sleeve, you run the risk of poor performance or product failure. This is not covered under the LG warranty.

Remove the vertical deflectors in the existing grille to reduce condenser air recirculation that can cause the unit to poor cooling or heating and component failure.

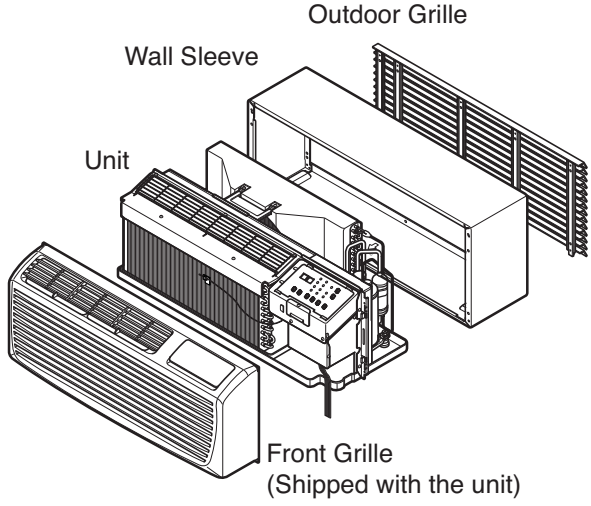

CAUTION

- There are sharp edges that can cause serious cuts.
- When lifting the air conditioner.
  Use 2 people to lift.(the unit is heavy)

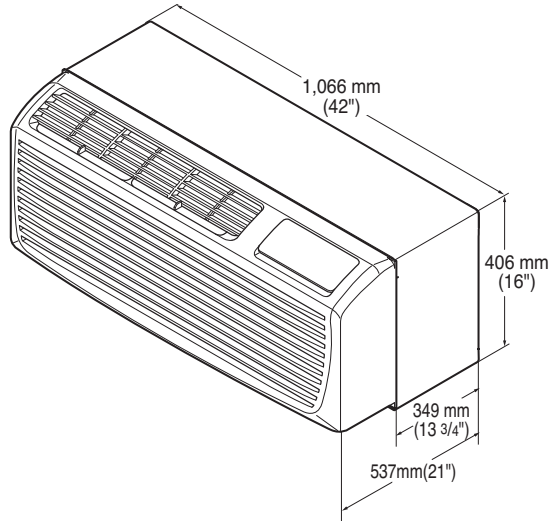

For existing sleeve, you should measure the wall sleeve dimensions.
Install the new air conditioner according to these installation instructions to achieve the best performence. The wall sleeve used to mount the new air conditioner must be in good structural condition and have a rear grille that securely attaches to the sleeve or the flange of the sleeve to secure the new air conditioner.

- To avoid vibration and noise, make sure the unit is installed securely and firmly.

When installing the sleeve & Front grille, make certain there is nothing within 20" Back & front of sleeve & front grille, that would interfere with heat radiation and exhaust air flow.

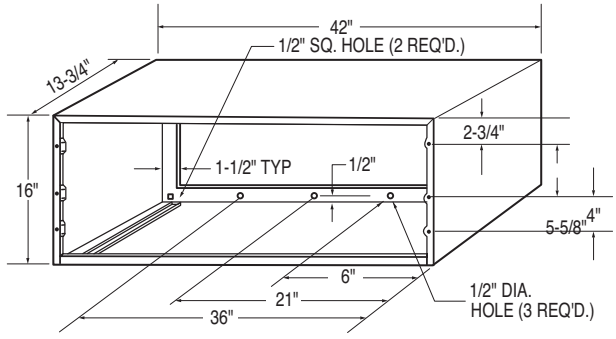

Wall opening 16-1/4"x42-1/4"

Recommended

To maintain the best performance of LG PTAC

1. An insulation strip must be attached. The insulation strip is provided with the box.
2. After assembly of sleeve & Front grille, the gap should be 20" from both sleeve & grille. For assembly PTAC Model refer the digram given below.

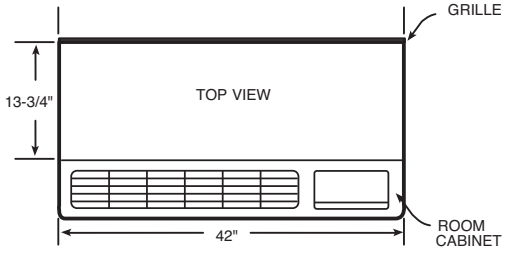

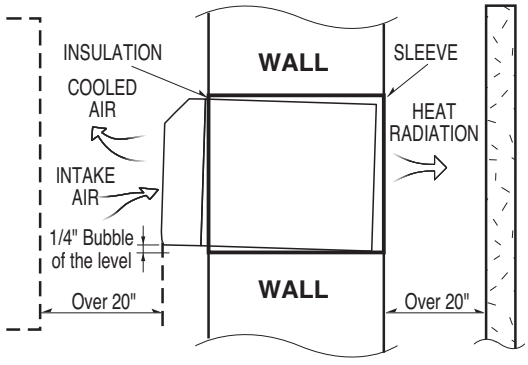

1) Take out the insulation strip from the upper packing.

2) Attach the insulation strip onto the rear upper side of the wall sleeve.

3) Insulation strip prevents the exhaust air from re-entering from either side of condenser space which may decrease the cooling efficiency of condenser.

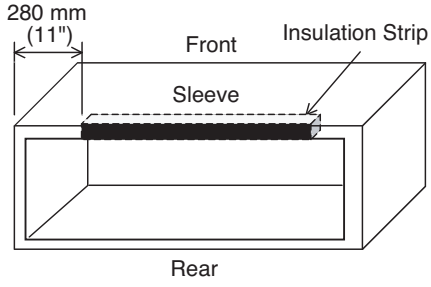

2.5 WALL SLEEVE INSTALLATION

Wall Case Installation Data

General

Generally, units are installed 3" to 5" above the floor (flush to finished floor installation is possible) as near to the center of the room as possible; underneath a window or a glass panel is typical. Normal installation of the wall case allows installation flexibility; from flush with the finished interior wall to a minimum of 1/4" of the wall case extending beyond the finished exterior of the building.

Special consideration must be given to installations where the wall case does not extend a minimum of 1/4" beyond the finished exterior wall.

Regardless of the installation, there are several things to consider when selecting a location for installing the unit. For instance, drapery location could interfere with air discharge, and placement of furniture may have an impact on the performance of the unit. The following information is intended to minimize installation problems and assure you of a trouble-free installation.

Refer to last page for required wall opening dimensions. Minimum recommended interior and exterior case projection for standard wall thicknesses are shown in the drawings in this manual. The case may be installed flush with the finished indoor wall.

Mounting an outdoor grille or louver section to the building face may cause a space between the outdoor coil and the louver section. Air splitters, aligned with the ends of the outdoor coil, must be installed between the outdoor coil inlet and outlet air streams. Gaps between the outdoor coil and the louver section may allow condenser air recirculation and affect the operation of the unit.

The wall case should be level from side to side and from level to 1/4 bubble tilt to the outdoors. The condensate disposal system in the unit is designed to dissipate the condensate water generated during cooling operation in accordance with ARI standards and actually uses this water for maximum unit efficiency. A level unit will also insure proper performance of the Internal Condensate Removal (ICR) system optional on heat pump units.

For new construction, early planning with the architect is necessary. Unit location, electrical connection locations, and wall openings of proper dimension are essential to avoid the necessity of rework, fillers, framing, moving electrical outlets, and other expensive modifications.

For existing construction it is important that carpentry, masonry and electrical work be performed by competent, qualified personnel. **Since installations in existing construction may involve removal of building material from the structure, location of the wall case must be precisely done.**

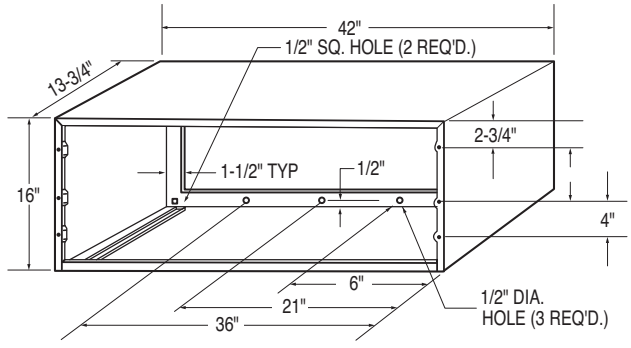

Wall opening 16-1/4" x42-1/4"

Preparation of the front grille

Carefully remove shipping tape from the front grille.

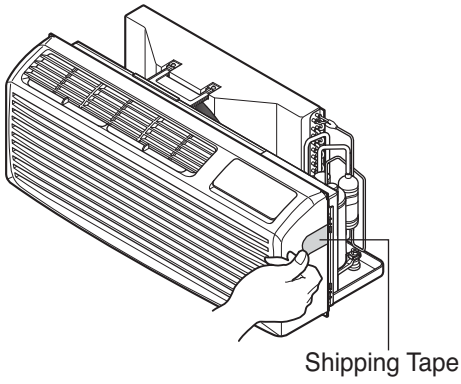

Brick, Frame, Stucco and Shingle Construction

For new construction, the opening for the wall case should be framed and inserted into the opening during construction. Lintels should be used when the building material is heavy and is not self supporting (such as brick). The wall case will fit an opening of six courses of standard brick or five courses of jumbo brick. Wall framing in this type construction is normally on 16" centers and the wall case will fit a framed opening spanning three 16" O.C. 2" x 4" stud spaces.

For existing construction the indoor and outdoor wall will need to be cut out, allowing for clearances of 1/8" on all sides of the wall case. Work should begin on the inside wall. Cut the correct dimensions and mark (using drill holes) the outside wall from each corner of the inside cutout. Studding that interferes with the opening must be removed and a suitable frame constructed to secure the wall case and provide adequate support for case and chassis.

Preparation of the Wall Case for All Types of Construction

As shipped, the LG wall sleeve is ready for installation.
Do not remove the stiffener from inside the wall case or the weather closure panel from the outside face of the wall case until the outdoor grille and chassis are ready to be installed.

Installation of Wall Case in Wall Opening

1. Position the wall case into the wall. The room side edge of the wall case should be at least flush with the finished wall for line cord installations and permanent connection installations when no sub-base is used, and should project into the room at least 2-3/8" when a sub-base is used. If the minimum exterior dimensions are not met, refer to page 60.
   The outside edge of the wall case should extend at least 1/4" beyond the outside wall.
   This is necessary for proper caulking, to prevent sealing thedrain holes in the rear flange of the wall case, and to facilitate the installation of an accessory drain, if used.

The wall case should be level from side to side and from level to 1/4 bubble tilt to the outdoors. The condensate disposal system in the unit is designed to dissipate the condensate water generated during cooling operation in accordance with ARI standards and actually uses this water for maximum unit efficiency. A level unit will also insure proper performance of the Internal Condensate Removal (ICR) system optional on heat pump units.

2. The wall case should be secured to the wall at both sides.
   Use a minimum of two screws or other fastening device on each side. See Figure 2 page 60. Mark the wall case on each side 2" from the bottom and 2" from the top at a point where basic wall structure is located. Drill wall case and use fasteners appropriate for wall construction. All holes for fasteners in the side of the wall case must be at least 2" up from the bottom of the wall case.
   Never fasten screws or put other holes in the bottom of the wall case.
   If the wall opening is greater than the case dimensions, spacers must be used on the sides between the wall case and the wall support structure to prevent distorting the wall case.
3. Caulk or gasket the entire opening on the outside between the wall case and exterior wall surface (4 sides) to provide total water and air seal.
4. Caulk or gasket room-side opening between wall case and interior wall surface (4 sides). Opening beneath or around the wall case can allow outdoor air to leak into the room resulting in increased operating costs and improper room temperature control.

Care should be taken in location of electrical supply entry in relationship to wall sleeve to assure access to receptacle or junction box once unit is installed.

FRAMING FOR WALL CASE

BRICK VENEER AND FRAME CONSTRUCTION

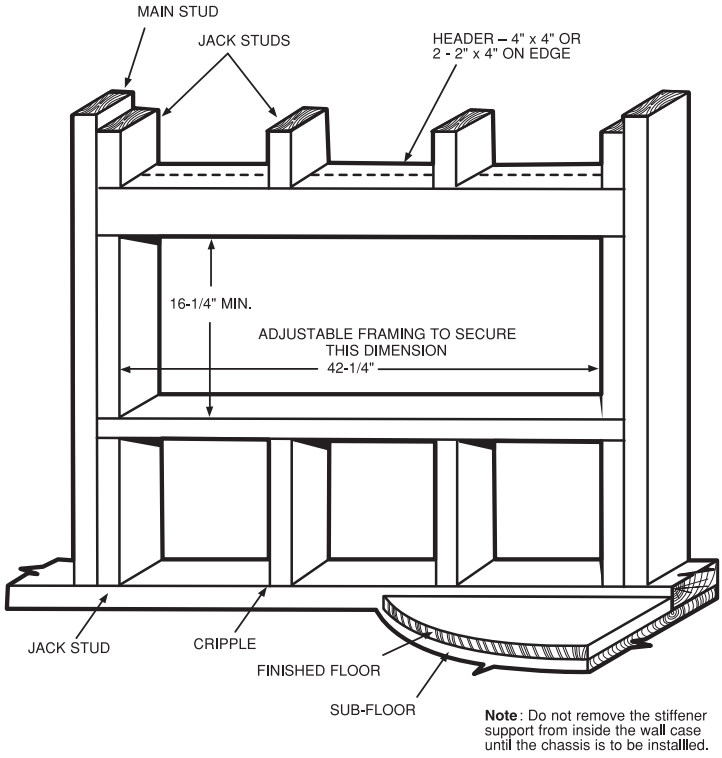

Figure 1

FASTENING WALL CASE

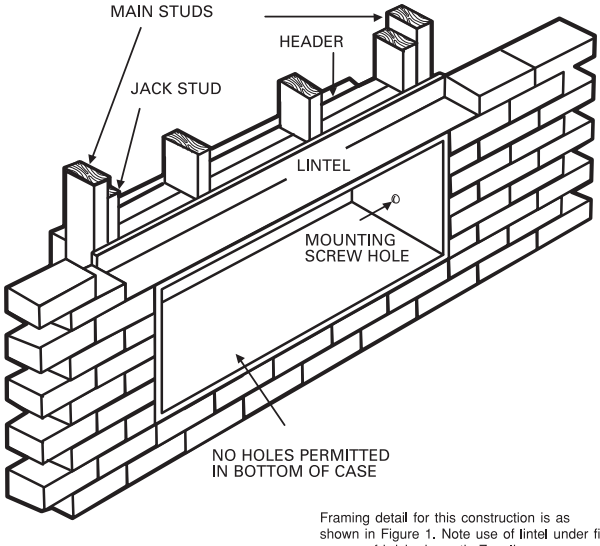

Framing detail for this construction is as shown in Figure 1. Note use of lintel under first course of brick above theZoneline case. Do not use the case as alintel. Mounting screw holes shown are tobe made by the installer

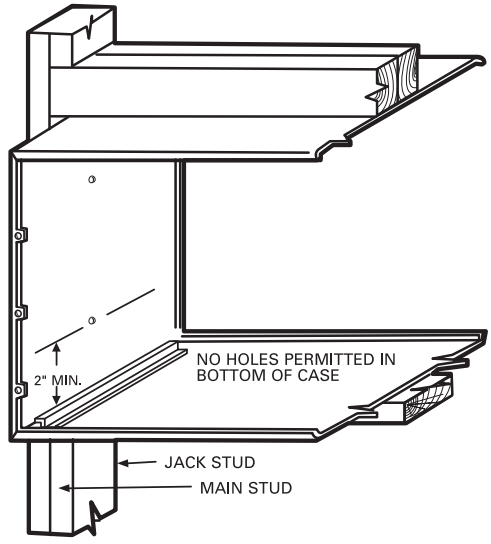

Choice of attachment devices through both ends of case or thetop. Mounting screw holes and attachment devices by installer.

Figure 2

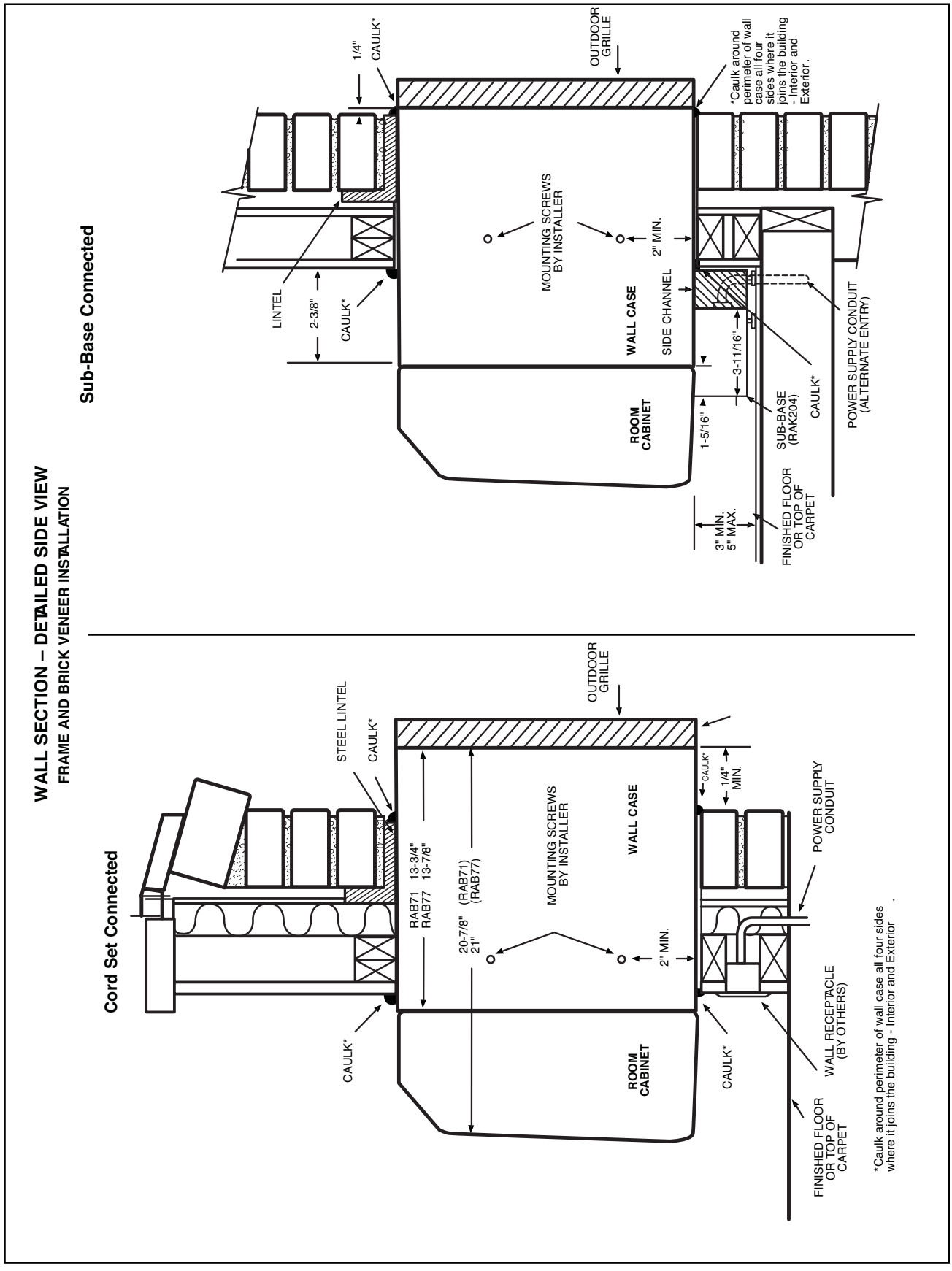
WALL SECTION – DETAILED SIDE VIEW
FRAME AND BRICK VENEER INSTALLATION
Sub-Base Connected
1/4"
CAULK*
OUTDOOR GRILLE
*Caulk around perimeter of wall case all four sides where it joins the building - Interior and Exterior .
LINTEL
2-3/8"
CAULK*
MOUNTING SCREWS BY INSTALLER
2" MIN.
WALL CASE
SIDE CHANNEL
3-11/16"
ROOM CABINET
1-5/16"
SUB-BASE (RAK204)
CAULK*
POWER SUPPLY CONDUIT (ALTERNATE ENTRY)
3" MIN. 5" MAX.
FINISHED FLOOR OR TOP OF CARPET
Cord Set Connected
STEEL LINTEL
CAULK*
OUTDOOR GRILLE
RAB71 13-3/4"
RAB77 13-7/8"
20-7/8" (RAB71)
21" (RAB77)
MOUNTING SCREWS BY INSTALLER
WALL CASE
CAULK*
1/4" MIN.
POWER SUPPLY CONDUIT
2" MIN.
CAULK*
ROOM CABINET
CAULK*
WALL RECEPTACLE (BY OTHERS)
FINISHED FLOOR OR TOP OF CARPET
*Caulk around perimeter of wall case all four sides where it joins the building - Interior and Exterior .

• unit installation

1. Remove the shipping screw from the ventilation door.

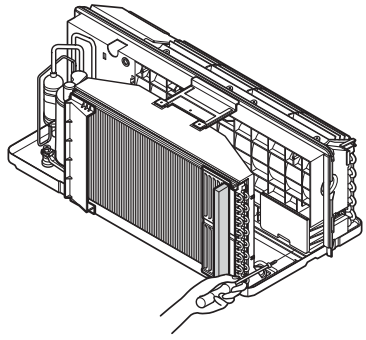

2. Remove the front gille by pulling it out at the bottom to release it, then lift it up along the unit top front.

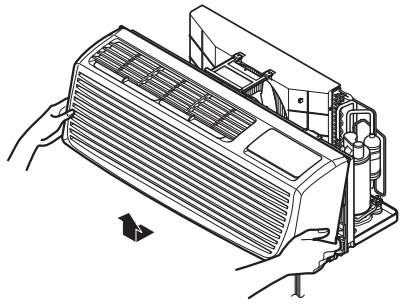

3. Slide the unit into the wall sleeve and secure with 6 screws through the unit flange holes.

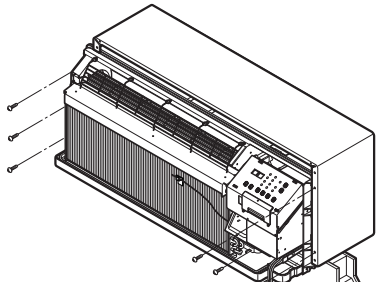

4. Reinstall the front grille by hooking the top over the unit top, then pushing it in at the bottom.

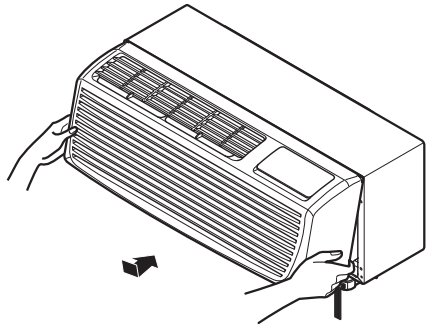

⚠ CAUTION

- Failure to follow this caution may result in equipment
  damage or improper operation.
- Blocking indoor(curtain or bedclothes etc.) or outdoor discharge air could cause premature failure of unit.

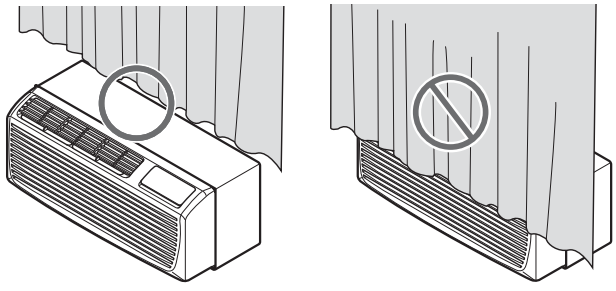

ELECTRICAL SAFETY

IMPORTANT (PLEASE READ CAREFULLY)

FOR THE USER'S PERSONAL SAFETY, THIS APPLIANCE MUST BE PROPERLY GROUNDED

PREFERRED METHOD

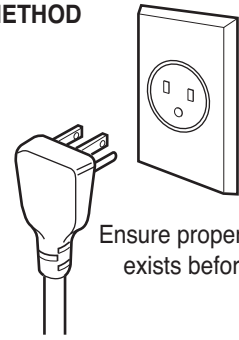

Ensure proper ground exists before use

The power cord of this appliance is equipped with a three-prong (grounding) plug. Use this with a standard three-slot (grounding) wall power outlet to minimize the hazard of electric shock. The customer should have the wall receptacle and circuit checked by a qualified electrician to make sure the receptacle is properly grounded.

DO NOT CUT OR REMOVE THE THIRD (GROUND) PRONG FROM THE POWER PLUG.

FUSE – Use a time – delay fuse or circuit breaker. Refer to the nameplate for proper power supply requirements.

⚠ CAUTION

1. Do not use an extension cord with this unit.
2. When the unit is in the OFF position, the power supply to the electrical controls is still energized.
3. Disconnect the power to the unit before servicing the unit.
4. Remove the power cord from the wall receptacle.
5. Remove or turn off the protective device (fuses or circuit breaker).

Wirings including installation of the receptacle must comply with the NEC and local codes, local regulations.

FUSE- Use a time-delay fuse or circuit breaker. Refer to the nameplate for proper power supply requirements.

Use Wall Receptacle	Power Supply
Standard 208/230V, 3-wire grounding receptacle rated 15A	Use 15 AMP. time delay fuse or 15 AMP. Circuit breaker.
Standard 208/230V, 3-wire grounding receptacle rated 20A	Use 20 AMP. time delay fuse or 20 AMP. Circuit breaker. (2500W Heater →15Amp Circuit Breaker)
Standard 208/230V, 3-wire grounding receptacle rated 30A	Use 30 AMP. time delay fuse or 30 AMP. Circuit breaker.
Standard 265V grounding receptacle rated 20A	Use 20AMP,time delay fuse or 20AMP Circuit breaker (2000W Heater →15Amp Circuit Breaker)
Standard 265V grounding receptacle rated 25A	Use 25AMP,time delay fuse or 25AMP Circuit breaker
Standard 265V grounding receptacle rated 30A	Use 30AMP, time delay fuse or 30AMP Circuit breaker

Installation(for 60Hz)

- Electric installation requirement for personal safety:
- This equipment must be properly connected to ground.
- Under no circumstances cut or break the grounder conductor.
- We recommend not to use an extension wire or any adaptor with this product.
- Follow the national or local electric codes.
- If the power supply does not fulfill the specifications previously mentioned, call an authorized electrician.
- The aluminum wired in the houses may bring about some problems, call an authorized electrician.
- This unit requires a separated power supply that works only for this application.

Part 4 Accessories

1 Controller accessories 65

1.1 Hard Wire kit 65
1.2 Wired Wall Thermostat Connection Kit 67

2 Mechanical accessories 68

2.1 Stamped Aluminum Grille - Single Pack 68
2.2 Remote Escutcheon Kit - 10 Pack 69
2.3 Replacement Filter - 10 Pack 70
2.4 Vent Filter 70

1. Controller accessories

1.1 Hard Wire Kit

The Hard Wire kit consists of a Junction box which provides a protective enclosure for the electrical connections. This junction box is furnished with approximately 2 - 1/2 feet of 1/2 inch flexible steel conduit and a metal box that secures to the PTAC at the control panel. The Hard Wire kit connects the PTAC directly to the building power supply wires and the junction box is intended to be mounted on the wall or the floor near the PTAC.

Hardwire Kit
AYHW101

Installation Procedure:

The Installation and servicing of the equipment should be performed by qualified and experienced personnel only.

1) At first, remove the cover plate from the junction box. Then, mount the junction box on the wall or floor within 28 inches (711mm) from the lower right corner of the wall sleeve so that the metal box is suitably clamped on the side of the sleeve as shown on the right below.
2) If a power switch is to be used, make sure the electrical connections are done and then mount the switch onto the junction box. During this operation, refer to the Power Switch Installation instructions.
3) Remove the control panel assembly by removing the two screws holding the control panel in place and then gently lift the panel. Disconnect the power cord leads from all electrical connections including the ground wire.
4) Remove the power cord clamp and the power cord from the unit.

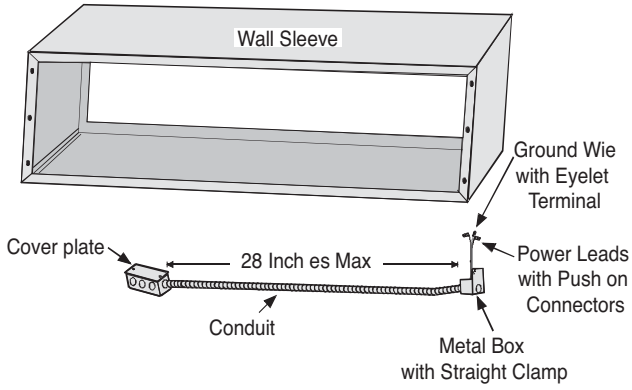

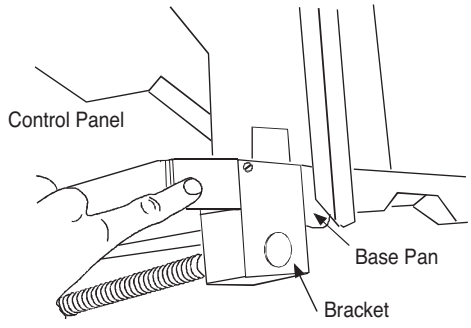

5) Now for 208/230 volt units, remove and discard the white lead from the wire assembly. For 265 volt units, remove and discard the red lead from the wire assembly.

* For 208/230 volt units and 265 volt units refer to notes given below.

6) Remove the retaining ring, which holds the threaded conduit and the metal box together, from the straight conduit clamp. Insert the three wires into the metal box through one of the two openings in the box. Replace the hole cover grommet into the unused hole to prevent objects from entering the box.

7) After inserting the wires, replace the retaining ring back on the conduit clamp inside the metal box and tighten the ring securely so that it holds the conduit firmly.

8) The three wires extending from the metal box to the incoming power opening are inserted in such a way that approximately 20inches (508mm) of the wires protrude through the opening.

9) Attach the metal box to the chassis once again. Then, finally insert the wire tie into the _ inch diameter hole located just above the incoming power opening. Tie all wires together securely with the wire tie as shown in the figure below.

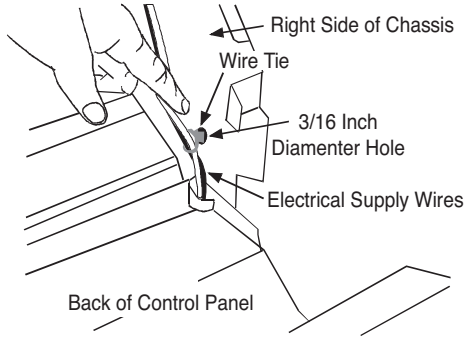

208 / 230 Volt Units

a) After removing the white lead from the wire assembly, connect the black lead to the line-2 terminal on the control board.

b) Connect the red lead to the common (C) terminal of the capacitor and then connect the ground wire to the partition panel where the ground wire of the power cord was located earlier. For grounding, use the supplied ground screw (green color).

c) Then connect the red lead wire of the wire assembly at the junction box to the red lead of the field power source and similarly, connect the black lead of the wire assembly at the junction box to the black lead of the field power source. After that connect the ground wire too from the field power source to the ground wire of the wire assembly at the junction box.

d) Install the junction box cover plate and reinstall the control panel assembly.

265 Volt Units

a) After removing the red lead from the wire assembly, connect the black lead to the center terminal of the fuse holder.

b) Connect the white lead to the common (C) terminal of the capacitor and then connect the ground wire to the partition panel where the ground wire of the power cord was located earlier. For grounding, use the supplied ground screw (green color).

c) Then connect the white lead wire of the wire assembly at the junction box to the white lead of the field power source and similarly, connect the black lead of the wire assembly at the junction box to the black lead of the field power source. After that connect the ground wire too from the field power source to the ground wire of the wire assembly at the junction box.

d) Install the junction box cover plate and reinstall the control panel assembly.

1.2 Wired Wall Thermostat Connection Kit

The PTAC Wire Harness kit provides connection from the 6-pin terminal strip on the PTAC control board to the following board features:

- Energy Management*
- Front Desk Control*
- Remote Fan (relay must be manufacturer-approved and have a AC low voltage coil)
- Remote Thermostat (confirm with manufacturer approved).

* If other than a "dry switch" is used in connecting these features, consult manufacturer before proceeding.

The PTAC Wire Harness kit contains the following:

1. 4-pin connector for an optional zone sensor
   - MODE
   - GND
   - CSP
   - ZONE
2. 7-pin connector for a thermostat connection
   - C - Cormmon
   - R - 24VAC
   - Y - Compressor
   - W - E/Heater
   - O - Reversing Valve (only on TPHP)
   - GH - High Speed Fan
   - GL - Low Speed Fan

Note: If there is only one Fan connection(G), connect to either GH or GL depending on desired fan speed.

Figure 1

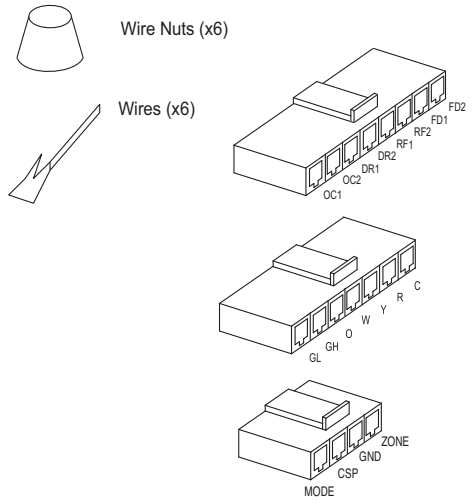

The PTAC Wire Harness kit contains the following:

1. 6-pin connector for the following options
   - FD1 and FD2 - Front Desk Control
   - MS1, MS2, DR1, and DR2 - Energy Management System (connections available for occupancy sensor and door switch)
2. 6 wire nuts
3. 6 wires

Installation

1. Disconnect power and remove the front panel per unit installation instruction.
2. Using Table 1 as a guide, choose the feature desired and insert the proper jumper wire (included) into the appropriate slot on the housing.
3. Install the appropriate maleconnector header onto the matching on-board female connector.
4. Connect the kit wiring to the field wiring using the wire nuts (included). Route the kit wiring as shown in Figure 2. Do not run wires through basepan or wall

Table 1

Feature	Pins Used
Motion Sensor	MS1, MS2
Door Switch	DR1, DR2
Front Desk Control	FD1, FD2

Figure 2

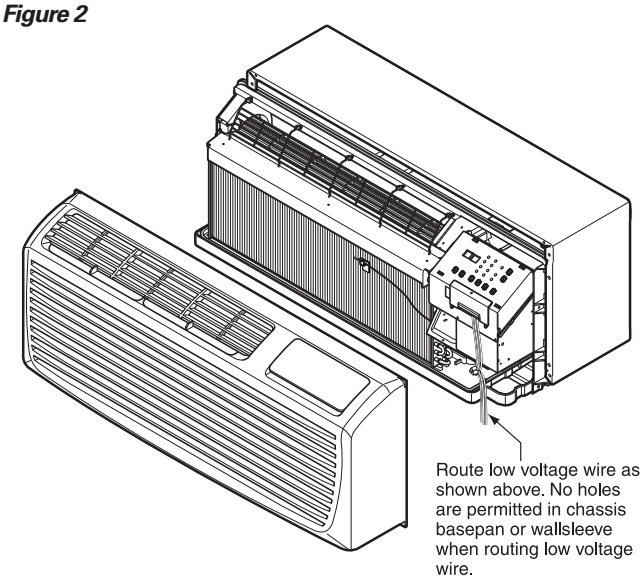

2. Mechanical Accessories

2.1 Stamped Aluminum Grille – Single Pack

Outdoor Grilles are attached to the Wall Sleeve and exposed to the exterior Wall. These Grilles comes in industry standard size of 42" x 16". These Grilles are of two types :

(a) Stamped Aluminum Grille

Stamped Aluminum Grille
AYRGALA01

Installation Procedure:

The Installation and servicing of the equipment should be performed by qualified and experienced personnel only.

(a) Stamped Aluminum Grille.

1) Prepare the wall sleeve for installation of the Grille by removing the cardboard stiffener and rear enclosure panel from the sleeve. These items may be removed from the inside of the room.

Note: *-*

The Sleeve stiffener must be taken out before the rear sleeve enclosure panel can be removed from the sleeve.

2) Prepare the stamped Aluminum Grille for installation on the sleeve by inserting the six plastic grommets into the square holes located near the outer edges of all the four sides of the Grille. Now with the Grille positioned so that the flanges of all the four sides are in the up position (at 90 degrees), insert the grommets in the opposite direction so that their square end protrudes through the grille through the flanges. The Grille is installed in such a way that it could be removed through the rear sleeve opening.
3) Install the stamped Aluminum Grille by aligning the guide pins located in the lower right and left hand corners of the Grille with the corresponding holes in the rear of the wall sleeve.
4) Secure the Grille by threading each of the screws into the plastic grommets.
5) Remove the wire handle from the center of the grille prior to installing the chassis into the sleeve.

2.2 Remote Escutcheon Kit

This kit provides an attractive replacement escutcheon, (see Figure 1). The kit allows the removal of control knobs and graphics, which are not required when a wall thermostat is used to control the unit.

Figure 1 - Standard Escutcheon

Figure 2

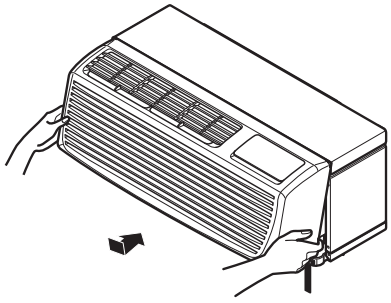

1. Grasp the cabinet front as shown in Figure 2.
2. Pull the bottom of the cabinet front away from the chassis until the retaining clips disengage as in Figure 3.
3. Lift the cabinet front off the chassis.
4. Lifting the front edge of the escutcheon.

Figure 3

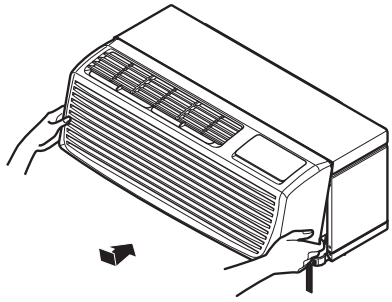

5. Replace the escutcheon with the one from control panel.

Figure 4

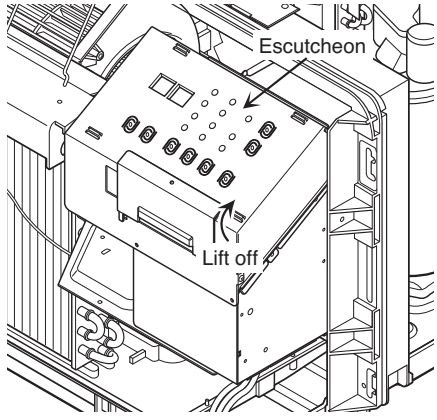

2.3 Replacement Filter (10 Pack)

The unit is provided with two easy-to-use replaceable mesh filters which can be cleaned periodically form time to time.

Replacement Filter 10-Pack
AYFT110

2.4 Vent Filter

The Vent filter is used to filter the air flowing inside the room when Air Ventilation is performed by means of the ventilation lever.

Installation Procedure:

The Installation and servicing of the equipment should be performed by qualified and experienced personnel only.

Before cleaning the vent filter, disconnect power to the unit by unplugging the power cord at the wall outlet or subbase, or disconnect power at the fuse box or circuit breaker. If unit is operated with vent door closed, the vent filter does not need to be cleaned.

1. Remove the cabinet front as described in Front Removal.
2. Remove the six screws securing the chassis to the wall sleeve with a Phillips-Head screwdriver.
3. Slide the chassis out of the wall sleeve far enough so that the vent filter is accessible as shown in Figure A.
4. Remove the vent filter by unscrewing the two screws at the top of the filter and gently pulling the filter away from the partition panel. Refer to Figure B.
5. Clean and replace the filter by reattaching the hook to the bottom of the vent door and replacing the two screws, slide the chassis back into the wall sleeve, secure it in place with six screws and reinstall the front cabinet.

Note:

Vent filter supplied as SVC Part not as an accessories part. Vent Filter can requested by Part Number 5230A20016A

Figure A – Vent (Left side of unit)

Figure B – Vent Filter Removal

LG
Life's Good

P/No.: MFL67884604

LG Electronics

Air Conditioner
20 Yeouido-dong, Yeongdeungpo-gu,
Yeouido P.O.Box 335 Seoul,
150-721, Korea.
http://www.lgeaircon.com

All rights reserved
Printed in Korea March/2013
The specifications, designs, and information in this brochure are subject to change without notice.

The air conditioners manufactured by LG have received ISO9001 certificate for quality assurance and ISO14001 certificate for environmental management system.