Register your new Bosch now:
www.bosch-home.com/welcome

Dishwasher
SHPM65W55N SHPM65W52N
SHPM65W56N SHXM65W55N

BOSCH

en-us Operating instructions
fr-ca Notice d'utilisation

Table of contents

Safety Definitions 5

IMPORTANT SAFETY INSTRUCTIONS 6

Causes of Damage 9

Getting Started 10

Rinse Aid. 12

Loading the Dishwasher 13

Detergent 21

Dishwasher Cycles 23

Dishwasher Cycle Options . .24

Operating the Dishwasher. . .26

Care and Maintenance 29

Troubleshooting 33

Customer Service. 37

Statement of Limited Product Warranty 38

Dear Valued Customer,

Thank you for selecting a Bosch® dishwasher. You have joined the many consumers who demand quiet and superior performance from their dishwashers.

This manual was written with your safety and convenience in mind, and the information contained herein is very important. We highly recommend that you read this manual before using your dishwasher for the first time.

To learn more about your dishwasher and available accessories, as well as many other top quality Bosch appliances, visit our web site at:

www.bosch-home.com/us (USA)
or
www.bosch-home.ca (Canada)

While there, don't forget to register your new dishwasher by clicking on the "Support" tab or filling out the product registration card enclosed with your new unit.

If you have any questions or comments, please contact us by phone at:

1-800-944-2904

or write us at:

BSH Home Appliances Corporation
1901 Main Street, Suite 600
Irvine, CA 92614

Safety Definitions

WARNING

This indicates that death or serious injuries may occur as a result of non-observance of this warning.

CAUTION

This indicates that minor or moderate injuries may occur as a result of non-observance of this warning.

NOTICE

This indicates that damage to the appliance or property may occur as a result of non-compliance with this advisory.

Note: This alerts you to important information and/or tips.

⚠ IMPORTANT SAFETY INSTRUCTIONS

READ AND SAVE THESE INSTRUCTIONS

This dishwasher is provided with Installation Instructions and this Use and Care Manual. Read and understand all instructions before using the dishwasher.

This dishwasher is intended for use up to a maximum altitude of 13,000 ft (4,000 meters) above sea level.

To reduce the risk of fire, electrical shock, or serious injury, observe the following:

⚠ WARNING

RISK OF INJURY OR DEATH!
Misuse of the dishwasher can result in serious injury or death. Do not use the dishwasher in any way not covered in this manual or for any purpose other than those explained in the following pages.

⚠ WARNING

RISK OF INJURY!
Severe injury and/or product damage could result from the use of unauthorized service technicians or non-original replacement parts. All repairs must be performed by an authorized service technician using only original equipment factory replacement parts.

⚠ WARNING

RISK OF ELECTRICAL SHOCK OR FIRE!
Electrical shock or fire could result if the electrical supply for the dishwasher covered in this manual is incorrectly installed or if the dishwasher has been improperly grounded. Do not use the dishwasher covered in this manual unless you are certain the electrical supply has been correctly installed and the dishwasher has been properly grounded.

⚠ WARNING

HEALTH HAZARD!
Never use harsh chemicals to clean your dishwasher. Some chloride-containing products can damage your dishwasher and may present health hazards!

⚠ IMPORTANT SAFETY INSTRUCTIONS

READ AND SAVE THESE INSTRUCTIONS

GROUNDING INSTRUCTIONS

This appliance must be grounded to a metal, permanent wiring system or an equipment grounding conductor must be run with the circuit conductors and connected to the equipment grounding terminal or lead on the dishwasher. See the Installation Instructions included with this dishwasher for more information on electrical requirements.

⚠ WARNING

RISK OF ELECTRIC SHOCK!
This appliance must be grounded. In the event of a malfunction or breakdown, grounding will reduce the risk of electric shock by providing a path of least resistance for electric current. This appliance is equipped with a cord having an equipment-grounding conductor.
Improper connection of the equipment-grounding conductor can result in risk of electric shock. Check with a qualified electrician if you are in doubt whether the appliance is properly grounded.

Safe Operation

Use this dishwasher only for its intended function, which is the washing of household dishware and kitchenware rated as dishwasher safe.

Use only detergents or rinsing agents recommended for use in a dishwasher, and keep them out of the reach of children.

⚠ CAUTION

When loading items to be washed:

- Locate sharp items so they are not likely to damage the door seal.
- Load knives and other sharp utensils with their HANDLES UP to reduce the risk of cut-type injuries.
- Do not wash plastic items unless they are marked “dishwasher safe” or the equivalent. For plastic items not so marked, check the manufacturer’s recommendations.
- Do not operate your dishwasher unless all enclosure panels are in place.
- Do not tamper with or override controls and interlocks.

Do not abuse, sit or stand on the door or dish racks of the dishwasher.

⚠ WARNING

RISK OF INJURY!
To avoid risk of injury, always use caution when opening the door during or following a wash cycle as hot water or steam may escape. Do not fully open the door until water noises have stopped and steam has subsided.

NSF/ANSI 184 Certified residential dishwashers are not intended for licensed food establishments.

⚠ IMPORTANT SAFETY INSTRUCTIONS

READ AND SAVE THESE INSTRUCTIONS

Child Safety

To reduce risk of injury, do not allow children to play in or on the dishwasher.

When children become old enough to operate the appliance, it is the responsibility of the parents/legal guardians to ensure the children are instructed in safe practices by qualified persons.

Proper Care and Maintenance

⚠ WARNING

RISK OF EXPLOSION!
Under certain conditions, hydrogen gas may be produced in a hot water system that has not been used for two weeks or more. Hydrogen gas is explosive. Before using a dishwasher that is connected to a hot water system that has been unused for two weeks or longer, turn on all hot water faucets and let the water flow from each for several minutes. This will release any accumulated hydrogen gas. As the gas is explosive, do not smoke or use an open flame during this time.

Remove the dishwasher door to the washing compartment when removing an old dishwasher for service or discarding.

To avoid floor damage and possible mold growth, do not allow wet areas to remain around or under the dishwasher.

To avoid dishwasher damage, do not allow water to remain in your dishwasher systems through extended periods of freezing temperatures. Freezing temperatures can damage the water fill valve and potentially other components of your dishwasher.

NOTICE

It is highly recommended for the end user to become familiar with the procedure to shut off the incoming water supply and the procedure to shut off the incoming power supply. See the Installation Instructions or contact your installer for more information.

⚠ WARNING

STATE OF CALIFORNIA PROPOSITION 65 WARNINGS!
This product contains one or more chemicals known to the State of California to cause cancer, birth defects, or other reproductive harm.

Causes of Damage

NOTICES

- Never use steam cleaning products to clean your dishwasher. The manufacturer will not be liable for the possible damages or consequences.
- Bleach-based wipes can cause stainless-steel doors and tubs to rust.
- Using harsh chemicals (e.g. bleach), abrasive cleaners, scouring pads (metal or plastic), or abrasive cloths/paper towels can damage your dishwasher's exterior door panel, fascia panel and buttons.
- To avoid dishwasher damage, do not load the dishwasher with paper products, plastic bags, packing materials or anything other than normal, dishwasher safe dishware and kitchenware.

Getting Started

Appliance overview

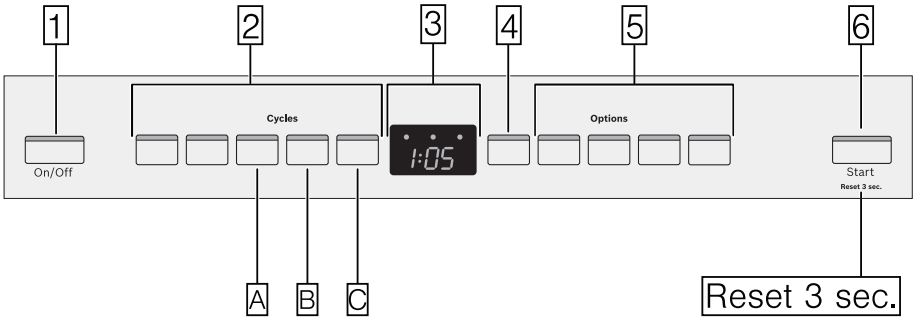

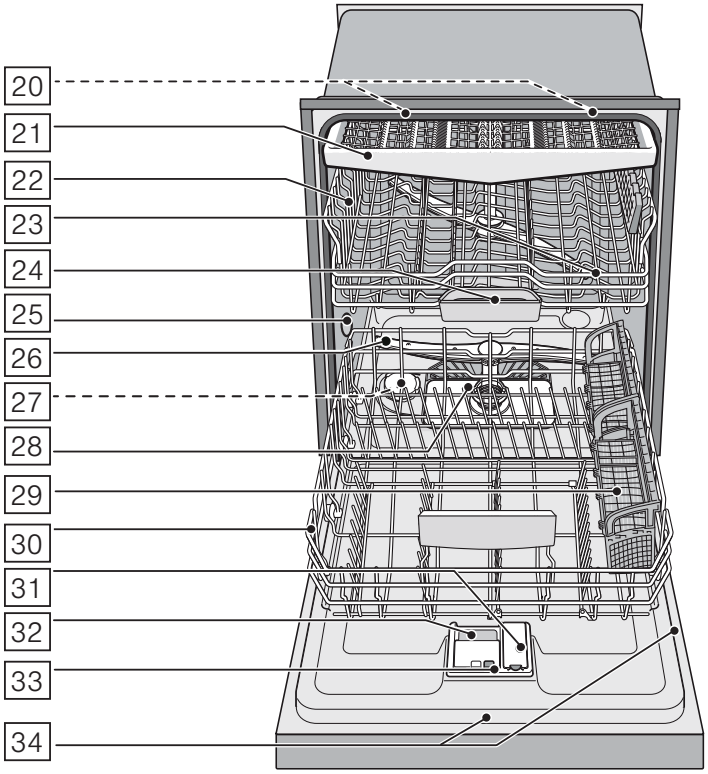

The dotted lines show optional features which may or may not be included with your dishwasher.

The numbers stated below refer to the overview images on the previous page of this manual.

Operating panel

1 On/Off button
2 Wash cycles
3 Digital display
4 Delay start button
5 Wash cycle options
6 Start button

Dishwasher interior components

20 Interior light *
21 Third rack
22 Upper rack
23 Upper spray arm
24 Detergent tab tray
25 Vent hole
26 Lower spray arm
27 Dispenser for special salt*
28 Filters
29 Silverware basket
30 Lower rack
31 Rinse aid dispenser
32 Detergent dispenser
33 Lock for detergent dispenser
34 Rating plate

* optional feature which may or may not be included with your dishwasher.

Display indicators

0:00	Cycle time remaining
Clean	Lights up when dishes are clean
Sanitize	Lights up when sanitation requirements are met
Add Rinse Aid	Lights up when rinse aid is low

Menu overview

The dishwasher has been preset with certain settings for your convenience. You can change these factory settings.

Use the function keys A, B and C to change the settings.

Setting	Factory setting	Description
r Rinse aid r:00 - r:06	r:05	Amount of rinse aid affects drying. When using Multitabs, select setting 0.
d Intensive drying d:00 - d:01	d:00 / Off	Improved drying for glasses and plasticware.
b Cycle completion signal b:00 - b:03	b:02	Signal sounds when wash cycle is complete.
I Info light I:00 - I:01	I:01 / On	Light is projected to signal an active wash cycle.
P Auto power off P:00 - P:02	P:01	Dishwasher switches off automatically after wash cycle is complete.

Rinse Aid

To achieve proper drying, always use a liquid rinse aid, even if your detergent contains a rinse aid or drying additive.

Note: The dishwasher indicates low rinse aid by turning on the Rinse Aid indicator on the display [3]. If this indicator lights up, you need to refill the rinse aid dispenser [31] by following the directions below.

Adding rinse aid

NOTICE

To avoid oversudsing or clogging, do not overfill the rinse aid dispenser [31]. Wipe up any spills with a damp cloth.

1. Open the rinse aid dispenser [31] by pressing on the latch of the lid and pull it open.

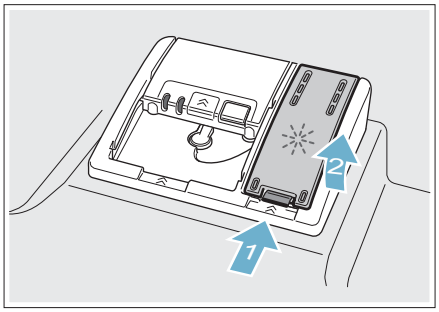

2. Add liquid rinse aid to the dispenser [31] until it is full. Do not overfill.

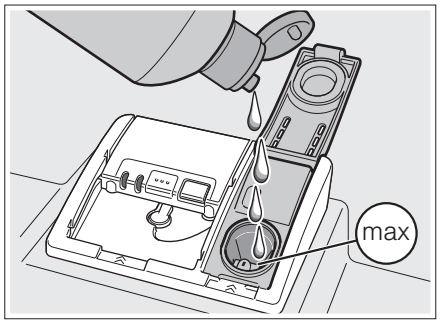

3. Close the lid. Lid must be fully closed until it clicks in order to seal.
4. Wipe up any excess rinse aid that may have puddled when the dispenser reservoir is full.

The indicator light will go out a few moments after the dishwasher door is shut.

NOTICE

Do not fill the rinse aid dispenser [31] with detergent. Doing so will damage the dishwasher.

Setting the amount of rinse aid used

The amount of rinse aid dispensed can be set from r:00 to r:06. The factory setting is r:05.

You should only change the setting if streaks remain on the dishes (lower the amount), or if dishes are not getting dry enough (increase the amount).

Setting	Amount
r:00	dispenser is OFF
r:01	lowest setting
r:02	low setting

Setting	Amount
r:03	medium setting
r:04	medium/high setting
r:05	high setting
r:06	highest setting

1. Press the **On/Off** button [1].
2. Hold down the function key [A] and press the **Start** button [6] until the display [3] indicates d:0x (x can be any number). Release both buttons.
3. Press the function key [A] until the display [3] shows r:05.
4. Press the function key [C] to select the desired setting.
5. Press the **Start** button [6] to save the setting.

Turning off rinse aid indicator

Proceed as described in the section "Setting the amount of rinse aid used" and set value to r:00. The rinse aid indicator is now turned off.

NOTICE

Using no rinse aid or setting the dispenser to r:00 may result in longer cycle times consuming more energy and water. The higher temperatures and longer cycle times can damage fine china or glassware.

Loading the Dishwasher

Dishware material

Note: Before using your dishwasher for the first time, check the information in this section. Some items are not dishwasher-safe and should be hand washed; others require special loading.

Recommended	
Aluminum	Colored anodized aluminum may fade over time. Minerals in your water may cause the aluminum to darken or spot. This can usually be removed with a soap-filled steel wool pad.
China, Crystal, Stoneware	Some hand-painted utensils may discolor, fade or spot. Hand wash these utensils. Position fragile glassware so that it will not topple over or come in contact with other utensils during the wash cycle.
Glass	Milk glass may discolor or become yellow.
Non-stick Coatings	Apply a light coating of vegetable oil to non-stick surfaces after drying.
Plastics	Make sure the plasticware is dishwasher-safe.
Stainless Steel, Sterling Silver and Silver Plates	Load these so they do not come in contact with other metals, stainless steel dishwasher tub walls or the inner door.

Not Recommended	
Acrylic	Crazing or small cracks throughout the acrylic, may occur.
Adhesive-Joined Pieces	Adhesives that join materials such as plastic, wood, bone, steel, copper, tin, etc. may loosen.
Bone-Handled Utensils	Handles may separate.
Iron	Iron will rust. Hand wash and dry immediately.
Non-Dishware Items	Your dishwasher is intended for use in cleaning ONLY standard household dishware and kitchenware.
Pewter, Brass, Bronze	These items will tarnish. Hand wash and dry immediately.
Tin	Tin will stain. Hand wash and dry immediately.
Wood	Wooden bowls, wooden utensils and utensils with wooden handles can crack, warp and lose their finish.

Loading the racks

For best dishwashing results, observe the following when loading the dishwasher:

- Do not pre-wash items with loosely attached food soil.
- Remove all food particles, bones, toothpicks and excessive grease.
- Pre-treat items having burned-on, baked-on or starchy soils.
- Load dishes in the dishwasher racks so the insides of bowls, pots and pans are facing the spray arms.
- Avoid nesting and contact points between dishes.
- Separate items of dissimilar metals. Use care to not block movement of the spray arms.
- Only wash household dishware and kitchenware rated as dishwasher-safe.
  Refer to the Dishware Materials section for more information about dishware suitability.

NOTICE

To avoid dishwasher damage, do not load the dishwasher with paper products, plastic bags, packing materials or anything other than normal, dishwasher safe dishware and kitchenware.

Loading the upper rack

Ensure items do not protrude through the bottom of the racks and block the spray arms.

Note: When pushing the upper rack [22] into the dishwasher, push it until it stops against the back of the tub so the upper rack spray arm [23] connects to the water supply at the back of the tub. Do not push racks in using the door.

Loading the lower rack

Place large items in the lower rack [30]. Load pots, pans and bowls upside down. Do not block the vent hole [25] with tall baking sheets. Load these items on the right side of the dishwasher.

Recommended loading pattern

For daily, regular or typical use

12 place setting

Lower rack 30

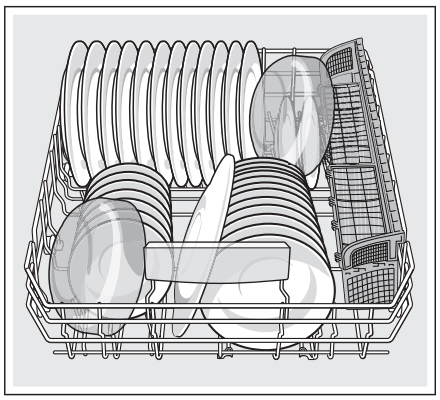

Upper rack 22

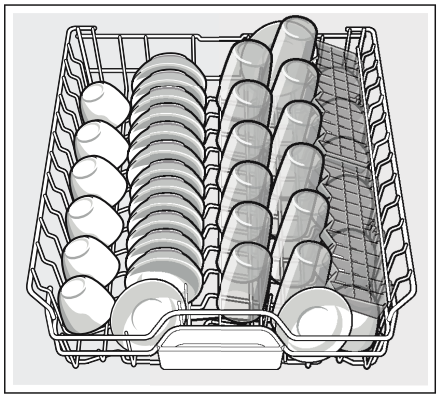

Note: Folding the cup shelves down will allow the cups to sit at an increased angle and reduce water pooling on cup bottoms.

Third rack 21

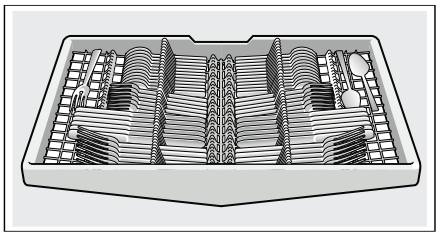

Additional loading pattern

10 place setting

Lower rack 30

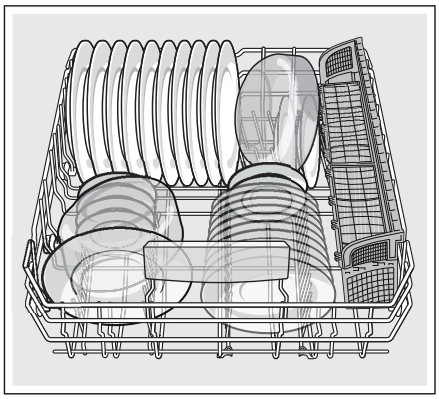

Upper rack 22

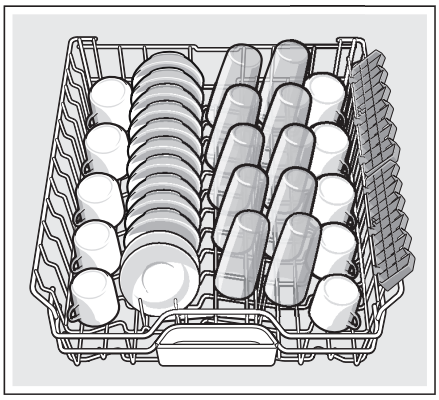

Note: Folding the cup shelves down will allow the cups to sit at an increased angle and reduce water pooling on cup bottoms.

Third rack 21

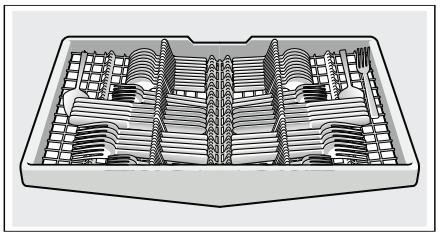

Loading the silverware basket

Place knives and sharp utensils with their handles up and forks and spoons with their handles down. If large or oddly-shaped items are loaded in the silverware basket, be sure they do not nest together.

⚠ WARNING

RISK OF INJURY!
The sharp points and edges of knives and other sharp utensils can cause serious injury. Load knives and other sharp utensils with edges down. Do not allow children to handle or play near knives and sharp utensils.

Long silverware basket

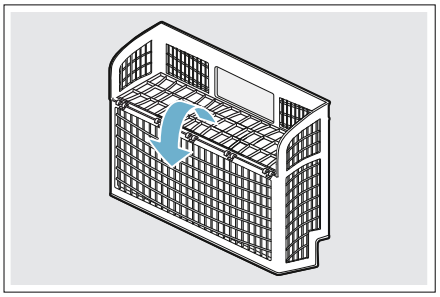

Note: The silverware basket lid may also be folded downward in order to leave the basket open.

This dishwasher is equipped with a silverware drawer that should accommodate most silverware loading needs.

However, if you are washing while the silverware drawer has been removed, or with excess silverware, a silverware basket is also included.

When loading the silverware basket you should avoid excessive contact points and nesting of similar items (allowing two spons to rest inside one another).

A good way to avoid excessive contact points is to load the silverware basket with the lids closed, inserting each piece of silverware into one of the individual slots as shown.

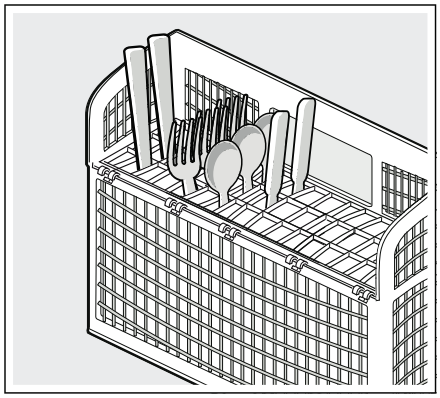

Unloading the dishwasher

When unloading the dishwasher, to prevent water from dripping onto dry dishes, unload the lower rack 30 first. Next, unload the silverware basket 29 followed by the upper rack 22, and then the third rack (if equipped).

Note: Dishes are more likely to chip when unloading before cooling.

Adjusting the height of the rack

If required, the height of the upper rack [22] can be adjusted to create more space for taller utensils either in the upper or lower rack.

With silverware basket	Upper rack	Lower rack
Setting 1 max. ø	9.4 in (24 cm)	13.4 in (34 cm)
Setting 2 max. ø	10.4 in (26.5 cm)	12 in (30.5 cm)
Setting 3 max. ø	11.4 in (29 cm)	11 in (28 cm)

With third rack	Upper rack	Lower rack
Setting 1 max. ø	7 in (18 cm)	13.4 in (34 cm)
Setting 2 max. ø	8 in (20.5 cm)	12 in (30.5 cm)
Setting 3 max. ø	9 in (23 cm)	11 in (28 cm)

Arrange large plates up to a diameter of 13.4 in (34 cm) in the lower basket [30] as illustrated.

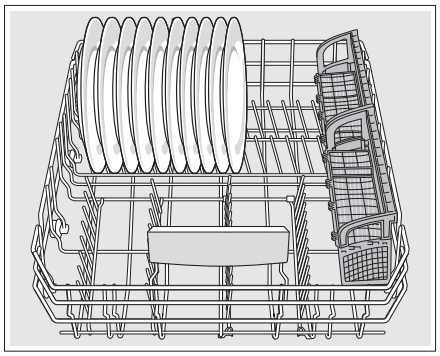

RackMatic®

The height of the upper rack [22] can be adjusted in 3 steps to create more space.

1. Pull the upper rack out of the dishwasher until it stops.
2. To lower the rack, push the RackMatic® lever inward.
3. To raise the rack, hold the basket on the sides of the upper rack and lift it up.

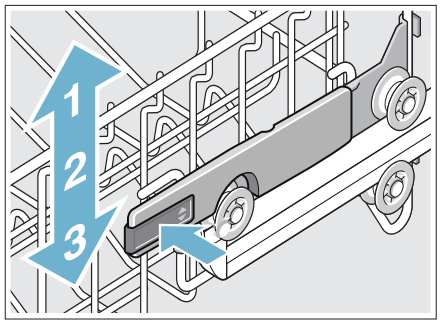

Note: Check spray arm for clearance after adjustment.

Rack accessories

Flip tines

The upper and lower rack are fitted with flip tines that can be folded down depending on what you may need to load in the rack.

Lower rack flip tines: To fold down, pull flip tine gently forward and release it from the notch. Push the flip tine downward. To fold up, push flip tines into an upright position until the holder engages in the notch.

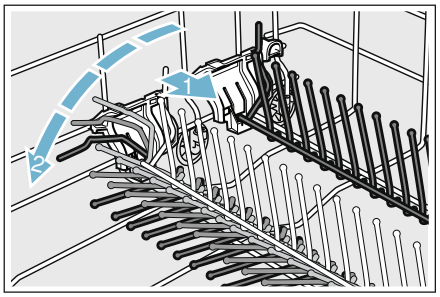

Upper rack flip tines: To fold down, push flip tines downward with gentle pressure. To fold up, push flip tines into an upright position until the holder engages in the notch.

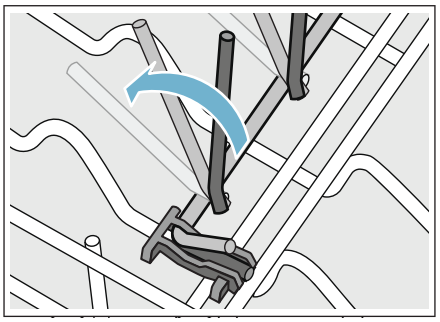

Third rack

The third rack 21 horizontally positions knives, spatulas and other oversized tools for improved cleaning and easier loading and unloading. Arrange cutlery in third rack as illustrated.

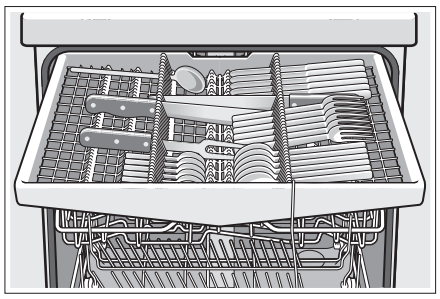

You can fold down the side shelves to provide more room for taller items of silverware. The front rows of prongs can be folded down to provide room for wider handles.

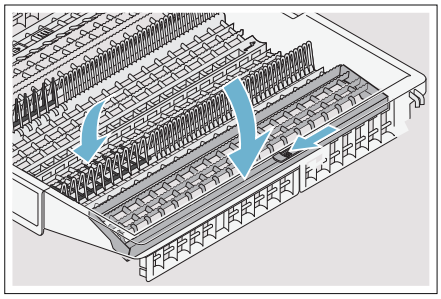

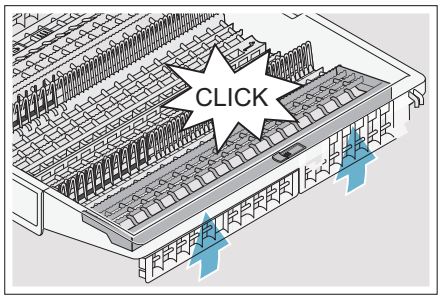

Cup shelves

The cup shelves and the space underneath them can be used for small cups or for larger serving utensils.

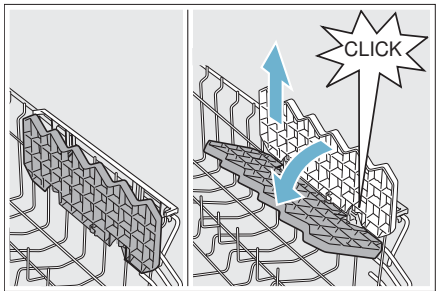

Removing/Installing third rack

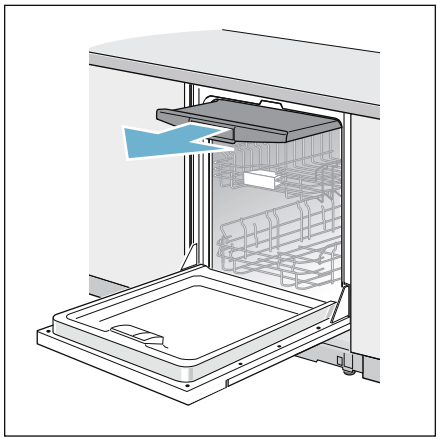

Removing third rack 21

1. Pull out third rack all the way (1).
2. Lift upper rollers over the stopper hooks of both rails (2).
3. Pull third rack out forward and upward so the the holding hooks and the lower rollers of the rack slide over the stopper hooks of both rails (3).

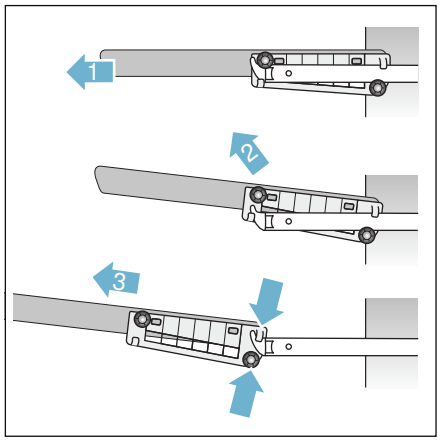

Installing third rack 21

1. Pull out third rack rails all the way (1).
2. Insert third rack at an angle. Make sure that the stopper hooks of both rails slide in between the holding hooks and the lower rollers of the third rack (2).
3. Slide third rack in and lift the upper rollers over the front stopper hooks of both rails (3).
4. Push in third rack (4).

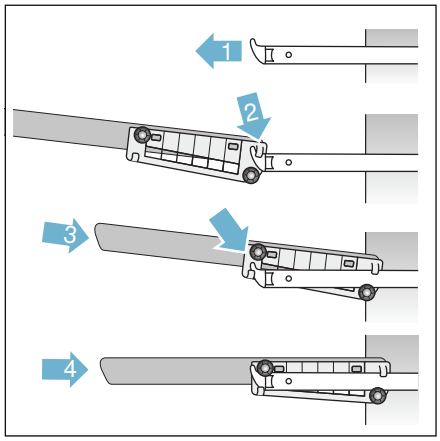

Removing/Installing upper rack with Rackmatic®

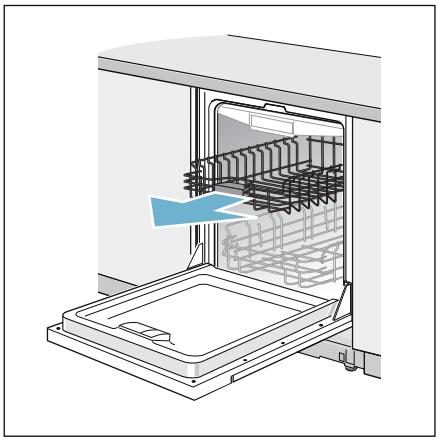

Removing upper rack 22

1. Pull out upper rack all the way (1).
2. Lift front rollers over the stopper hook of the rail (2).
3. Pull out upper rack forwards and upwards so that the upper and lower rollers of the rack slide over the stopper hooks of both rails (3).

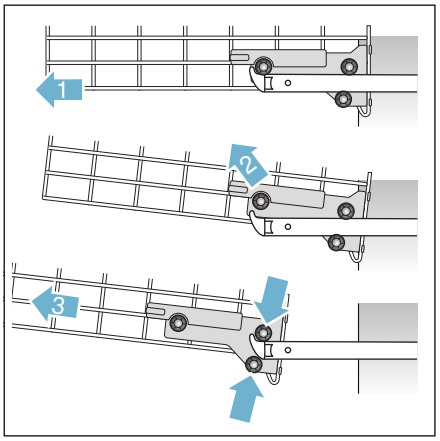

Installing upper rack 22

1. Pull out upper rack rails all the way (1).
2. Insert upper rack at an angle. Make sure that the stopper hooks of both rails slide in between the upper and lower rollers on the rear side of the rack (2).
3. Slide upper rack in and lift the upper rollers over the front stopper hooks of both rails (3).
4. Push in upper rack (4).

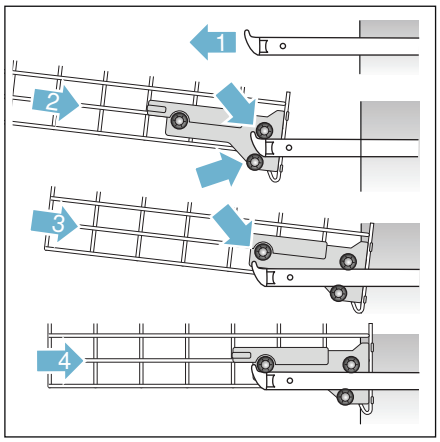

Detergent

Use only detergent specifically designed for dishwashers. For best results, use fresh powdered dishwashing detergent or detergent tabs.

NOTICE

To avoid dishwasher damage:

- Do not use hand dishwashing products in your dishwasher.
- Do not use too much detergent if your water is soft. Using too much detergent with soft water may cause etching in glassware and fine china.

This dishwasher uses less water than most, therefore, less detergent is required. With soft water, 1 tablespoon (15 ml) of detergent will clean most loads. The detergent dispenser cup has lines that measure detergent to 1 tablespoon (15 ml) and 1.75 tablespoons (25 ml). 3 tablespoons (45 ml) of detergent will completely fill the detergent dispenser.

Note: If you do not know the hardness of your water supply, use 15 ml of detergent. Increase the amount if necessary to the least amount required to get your kitchenware clean.

Use the measuring lines in the detergent dispenser cup as a guide to measure the amount of detergent recommended in the following table.

Wash Cycle	Hard Water/ Heavy Soil	Medium Water/ Medium Soil	Soft Water/ Little Soil
Heavy	3 tbsp (45 ml)	3 tbsp (45 ml)	1.75 - 3 tbsp (25 - 45 ml)
Auto	1.75 - 3 tbsp (25 - 45 ml)	1.75 tbsp (25 ml)	1 - 1.75 tbsp (15 - 25 ml)
Normal	1.75 - 3 tbsp (25 - 45 ml)	1.75 tbsp (25 ml)	1 - 1.75 tbsp (15 - 25 ml)
Speed60®	1.75 tbsp (25 ml)	1 - 1.75 tbsp (15 - 25 ml)	1 tbsp (15 ml)
Rinse	none	none	none

Adding detergent

1. If the detergent dispenser [32] is still closed, actuate the locking bar [33] to open it.

   Note: Make sure the detergent dispenser is dry and clear of detergent residue.

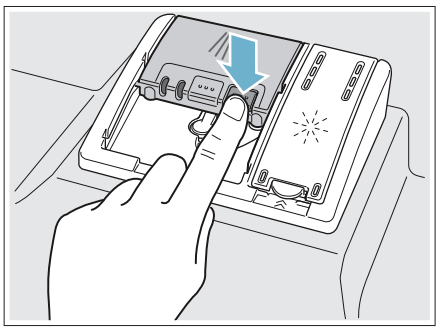

2. Pour detergent into the dry detergent dispenser [32] only. Add detergent. Do not overfill the detergent dispenser.

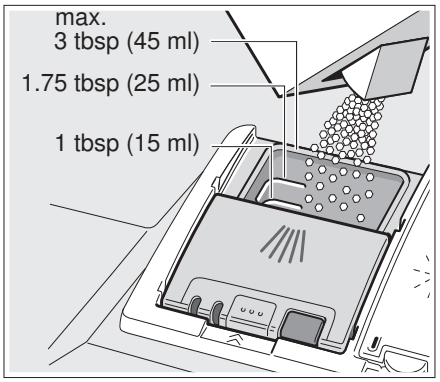

   When using detergent tabs, lay them such that they do not come in contact with the cover, insert a detergent tab flat, not on its side.

   Note: Do not place detergent tabs or utensils in the detergent tab tray [24]. Place tabs or other detergent forms directly in the detergent dispenser [32].

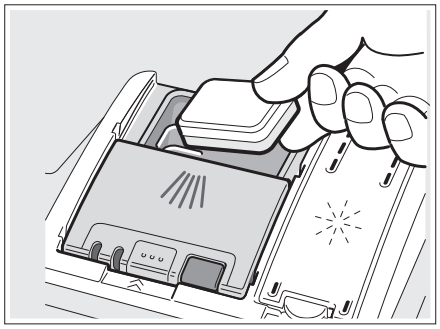

   Dosage: see manufacturer's instructions on the packaging.

3. Close the lid by placing the finger on the lid as shown. Slide the lid closed and press down firmly until it clicks.

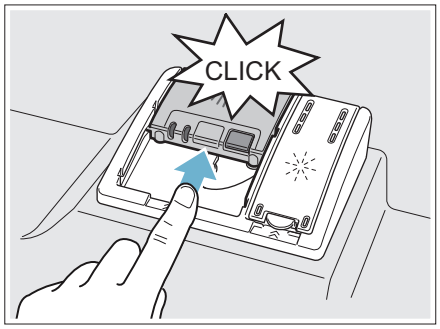

   The detergent dispenser will open automatically at the ideal time for the set cycle. The powder or liquid detergent is distributed in the appliance and is dissolved, detergent tabs will fall into the detergent tab tray [24] where it dissolves during the cycle.

Tip: If the dishware is only lightly soiled, slightly less than the indicated amount of detergent is usually adequate.

Dishwasher Cycles

Wash cycle	Recommended use	Possible wash cycle option
Heavy	Best for cleaning items with baked-on food or grease. These dishes would normally require soaking or hand scouring.	all
Auto	Smartest cycle, with most flexible soil sensing, which is ideal for mixed dishware and food soils.	all
Normal (see note at bottom of table)	Recommended for daily, regular or typical use to completely wash a full load of normally soiled dishes.	all **Note:** In order to obtain optimal performance with minimum energy consumption, it is recommended to disable all available options and settings, except **Auto Power Off** - set to P:01 → *"Auto power off" on page 27*
Speed60®	Cleans freshly soiled dishes with easy to remove soils. This cycle reduces cycle time while still including drying.	**Delay** **Extra Dry®**
Rinse	Use this cycle if you need to pre-rinse dishes to avoid odors. Place unrinsed dishes inside the dishwasher and select the **Rinse** cycle. Uses less water than hand rinsing and very low energy.	**Delay**

Note: The Energy Guide label was based on the **Normal** soil sensing cycle as follows: The unit was tested without any rinse aid (liquid) in the rinse aid dispenser [31]. A single dose of detergent was inserted into the detergent dispenser [32], with no detergent being used in the prewash. The unit was not subjected to truncated testing per the definitions in the test procedure. We recommend that dish loads such as the one in the energy certification test have the rack position set in the highest position.

P+ Dishwasher Cycle Options

Delay

Allows you to delay the start time of your dishwasher up to 24 hours.

Half Load

Can reduce water consumption when washing small, lightly soiled loads that fill approximately half of the dishwasher's capacity.

Delicate

This option's reduced time and temperature are best for lightly soiled items with easy to remove food soils. The option also reduces the likelihood of cloudy glasses. Rinse aid is recommended for the high gloss drying function (even when using combination detergents).

Sanitize

Increases the temperatures and retains them for an extra long time to obtain a defined disinfecting performance. Continuous use of this function increases the hygiene status. This additional option is ideal for cleaning items such as chopping boards and baby bottles.

Using the Sanitize option may also improve drying. The cycle time and energy usage may be increased.

Extra Dry

Used in combination with a wash cycle (except Rinse), the Extra Dry option raises the temperature and extends the drying time to further enhance drying results and provide a brilliant shine. The energy usage may be increased.

Wash Cycle Information

To save energy, this dishwasher has EcoSense where the sensors in the dishwasher automatically adjust the cycle length, temperature and water changes based on the amount of food soil and the incoming water temperature. The "Smart Control" makes decisions that can cause the cycle time and water usage to adjust intermittently. **Wash cycle times are based on 120°F (49° C) water supply.** If your household water supply is different than 120°F (49° C), your dishwasher's cycle times may be impacted.

	Heavy	Auto	Normal	Speed60®	Rinse
Cycle time min.	110 - 135	105 - 129	130 - 135	60	9
Water usage gal/L	4.9-6.4/ 18.6-24.2	3.4-6.4/ 12.9-24.1	2.3-5.5/ 8.8-21.0	3.8/ 14.3	1.1/ 4.1
Wash temp. °F/°C	151-160/ 66-71	127-131/ 53-55	113-131/ 45-55	122/ 50	in-coming

	Heavy	Auto	Normal	Speed60®	Rinse
Rinse temp. °F/°C	162/ 72	153-162/ 67-72	156/ 69	158/ 70	in-coming
Half Load					
Cycle time min.	114	90-105	90-99	N/A	N/A
Water usage gal/L	4.7/ 17.9	2.7-4.4/ 10.2-16.5	2.8-3.7/ 10.8-13.9	N/A	N/A
Rinse temp. °F/°C	162/ 72	131-151 55-60	162/ 72	N/A	N/A
Delicate					
Cycle time min.	105 - 130	90 - 105	110 - 120	N/A	N/A
Water usage gal/L	4.9-6.4/ 18.6-24.2	3.5-6.5/ 13.1-24.5	2.3-5.5/ 8.8-21.0	N/A	N/A
Rinse temp. °F/°C	140/ 60	149 65	140-149/ 60-65	N/A	N/A
Sanitize					
Cycle time min.	130-150	125-150	135-155	N/A	N/A
Water usage gal/L	4.9-6.4/ 18.6-24.2	3.4-6.4/ 12.9-24.1	2.3-5.5/ 8.8-21.0	N/A	N/A
Rinse temp. °F/°C	162/ 72	162/ 72	162/ 72	N/A	N/A
Extra Dry					
Cycle time min.	130-150	125-150	135-155	60	N/A
Water usage gal/L	4.9-6.4/ 18.6-24.2	3.5-6.5/ 13.1-24.5	2.4-5.5/ 8.8-20.8	3.8/ 14.3	N/A
Rinse temp. °F/°C	162/ 72	162/ 72	162/ 72	158/ 60	N/A

Note: Only sanitizing cycles have been designed to meet the requirements of Section 6 of the NSF/ANSI Standard for Residential Equipment for soil removal and sanitization efficacy. There is no intention, either directly or indirectly, to imply that all cycles have passed sanitization performance tests.

Operating the Dishwasher

Note: With hidden controls, the door must be opened before changing settings and closed after changing settings.

WARNING

RISK OF INJURY!
To avoid risk of injury, always use caution when opening the door during or following a wash cycle as hot water or steam may escape. Do not fully open the door until water noises have stopped and steam has subsided.

Protection against unintentional operation

Your dishwasher is equipped with a function that helps to prevent unintentional operation (e.g. by children).

After setting the dishwasher, the dishwasher door has to be closed within 4 seconds, otherwise the operation will be paused. There will be a signal on the control panel advising you to press the Start button again and close the door.

This function will be activated when:
- pressing Start to begin a wash cycle
- setting Delay time and pressing Start
- opening the door while Delay time is active
- opening the door during a wash cycle.

Note: This function cannot be deactivated.

AquaSensor

The AquaSensor is an optical measuring device which measures the cleanliness of the rinse water.

The AquaSensor is used according to the wash cycle. If the AquaSensor is active, “clean” rinse water can be transferred to the next rinse and water consumption can be reduced by 0.8–1-5 gal (3–6 liters). If the rinse water is not yet clear, the water is drained and is replaced with fresh water. In the automatic wash cycles the temperature and running time can also be adjusted to the degree of soiling.

Switching the appliance on

1. Turn the water supply on fully.
2. Press the **On**/**Off** button [1].
   The AUTO wash cycle has been preset as a default whenever the appliance starts. This wash cycle remains selected if no other wash cycle button [2] is pressed.
   Select any desired option.
3. Press **Start** button [6].

Wash cycle sequence starts.

Note: Your dishwasher is protected against unintentional operation. If the appliance door remains open for more than 4 seconds after pressing the Start button, the operation will be paused. Close the appliance door and press the Start button [6] again.

Time display

When a wash cycle is selected the remaining wash cycle time is shown on the display [3].

The wash cycle time is determined during the wash cycle by the water temperature, the amount of dishes, as well as the degree of soiling and may vary (depending on the selected wash cycle).

Delay Start

You can delay the start of the cycle in one hour increments up to 24 hours.

h:01 1 hour delay
h:24 24 hours delay

To set Delay start:
1. Open the door and press the **On/Off** button [1]. Select a cycle.
2. Press the **Delay** button from the wash cycle options [5] until the displayed time corresponds with your requirements.
3. Press the **Start** button [6] to activate Delay start.

To cancel Delay start:
1. Open the door and press the **Delay** button until h:00 is indicated on the digital display [3].
2. Press the **Start** button [6] to save setting.

Note: Your dishwasher is protected against unintentional operation. If the appliance door remains open for more than 4 seconds after pressing the Start button, the operation will be paused. Press the Start button again and close the appliance door.

Wash cycle end

The wash cycle has ended when the display [3] reads 0:00.

If the signal tone has been set, the wash cylce end is also indicated by a buzzer.

b:00 Off
b:01 low
b:02 medium
b:03 loud

To change the signal volume:
1. Open the door.
2. Press the **On/Off** button [1].
3. Hold down function key [A] and press **Start** button [6] until the display [3] indicates d:0x (x can be any number). Release both buttons.
4. Press function key [A] until the display shows b:02.
5. Press function key [C]. Each time the button is pressed the set value increases by one level; when it reaches the value b:03, the display jumps back to b:00 (off).
6. Press **Start** button [6] to save the setting.

Auto power off

This setting determines the length of time the control panel stays illuminated after the cycle is complete. To save energy the recommended setting is P:01.

This setting can be adjusted from P:00 to P:02.

P:00 dishwasher does not turn off automatically
P:01 dishwasher turns off automatically after 1 minute
P:02 dishwasher turns off automatically after 120 minutes (2 hours)

To change the setting:
1. Press the **On/Off** button [1].
2. Hold down the function key [A] and press the **Start** button [6] until the display [3] indicates d:0x (x can be any number).
3. Release both buttons.
4. Press the function key [A] until the display [3] indicates P:0x.
5. Press the function key [C] until the display corresponds with your requirements.
6. Press the **Start** button [6].

Switching off the appliance

Short time after the end of the wash cycle:

1. Open the door.
2. Switch off On/Off button [1].
3. Turn off water supply.
4. Remove the utensils when they have cooled down.

⚠ WARNING

RISK OF INJURY!
To avoid risk of injury, always use caution when opening the door during or following a wash cycle as hot water or steam may escape. Do not fully open the door until water noises have stopped and steam has subsided.

Interrupting the wash cycle

⚠ CAUTION

Expansion (overpressure) may cause the appliance door to open and/or water to escape! If the door was opened on an appliance which has a hot water connection or is heated, always leave the door ajar for several minutes and then close.

1. Open the door.
2. Switch off On/Off switch [1].
   The LED's go out. The wash cycle is saved.
3. To continue the wash cycle, switch on the On/Off switch [1] again.
4. Close the door.

Note: Your dishwasher is protected against unintentional operation. If the appliance door remains open for more than 4 seconds after pressing the Start button, the operation will be paused. Press the Start button again and close the appliance door.

Terminating the wash cycle (Reset)

1. Press and hold **Start** button [6] for approximately 3 seconds until the display reads 0:01.
2. Wait about 1 minute while the dishwasher drains.
3. Press **On/Off** button [1].

You may now power the dishwasher back on and begin a new cycle if desired.

Changing the wash cycle

When the **Start** button [1] has been pressed, the wash cycle cannot be changed. The only way a wash cycle can be changed is by terminating the wash cycle (Reset).

InfoLight®

While the wash cycle is running, a light spot shines on the floor under the appliance door.
Do not open the appliance door until the light point is no longer visible on the floor.
If the appliance door is not completely closed, the light spot flashes*.
If the appliance is installed at eye-level, with flush furniture front, the light point is not visible.
In darkened rooms, some light scattering may be visible. This is normal and cannot be changed.

You can switch the Infolight on or off.

1:00	Off
1:01	low

To change the setting:

1. Open the door.
2. Press the **On/Off** button [1].
3. Hold down function key [A] and press **Start** button [6] until the display [3] indicates d:0x (x can be any number). Release both buttons.
4. Press function key [A] until the display shows 1:01.
5. Press the function key [C] to switch the InfoLight® feature on 1:01 or off 1:00.
6. Press **Start** button [6] to save the setting.

Intensive drying

The final rinse uses a higher temperature which improves the drying result. The cycle time may increase slightly. (Caution if utensils are delicate!)

This feature has two settings:

d:00 Off
d:01 On

1. Open the door.
2. Press the **On/Off** button [1].
3. Hold down function key [A] and press **Start** button [6] until the display [3] indicates d:x (x can be any number).
4. Release both buttons.
5. Press function key [A] until the display [3] indicates the factory set value d:00.
6. Press function key [C] to switch the Extra dry feature on d:01 or off d:00.
7. Press **Start** button [6] to save setting.

Care and Maintenance

A regular inspection and maintenance of your machine will help to prevent faults. This saves time and prevents future problems.

Overall condition of the dishwasher

NOTICE

- Never use a steam cleaner to clean your dishwasher. The manufacturer is not liable for any resulting damage.
- Regularly wipe the front of the appliance with a damp cloth - water and a small amount of liquid soap is adequate. Do not use sponges as they could scratch the surfaces.
- Do not use bleach-based wipes as they could damage the surface or printing.
- Stainless steel appliances: To prevent corrosion, do not use sponges or chlorine based cleaners. Use a stainless steel polish to seal and protect the surface. Do not use chlorine based cleaners or wipes.
- Clean the outer edges of the inside door panel regularly to remove debris that may collect from normal loading. If spots begin to appear on the stainless steel, make sure the rinse agent is full and functioning properly.
- Clean the door seal regularly with a damp cloth to remove food particles that may collect from normal loading and cause odor. A soiled door seal may not seal properly.

⚠ WARNING

Use caution when removing parts for cleaning as some debris may be sharp.

Filters

The Bosch® filter system 28 is designed to prevent the need to pre-rinse normally attached food soils from your dishes. Simply scrape leftover food soils off of dishware before loading. This process will conserve time, water and the energy require to heat your household water supply.

Your dishwasher filter system is designed to filter 100% of the water entering the spray arms to provide a continuous supply of clean water to remove food soils from your dishware.

Filter components

The filter system 28 consists of three parts.

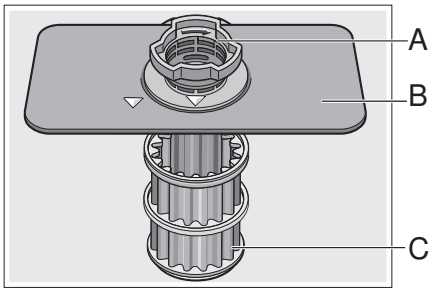

A Large Object Trap
Prevents objects that should not be placed in your dishwasher from damaging the dishwasher pump system or clogging your household drain.

B Flat Fine Filter
Prevents food particles from entering the wash chamber and directs particles toward the micro filter.

C Micro Filter
Directs the smallest of particles to the household plumbing drain.

Cleaning intervals

The filter system 28 is designed to minimize maintenance while providing premium cleaning performance and minimum energy consumption.

Depending on use habits and water hardness, the filter system will require some maintenance to sustain premium cleaning performance.

Your filter system may need to be cleaned when:

- You notice food soils remaining on the filter system or objects trapped in the Large Object Trap.
- A drop in cleaning performance or a gritty film forms on the dishware.

When washing normally attached food soils that have been scraped before loading, in a household that runs the dishwasher every other day, your filter should be cleaned:

Cleaning interval	Use this setting,
3-6 times a year	if you rinse before loading
4-12 times a year	if you only scrape before loading
12 times a year	if you have hard water

Note: Clean the filter after washing loads with large amounts of food soils or loads with a heavy starch content, like potatoes and pasta, to maintain optimal performance.

To check or clean the filter system:

1. Unscrew the Large Object Trap as illustrated and remove the entire filter system.

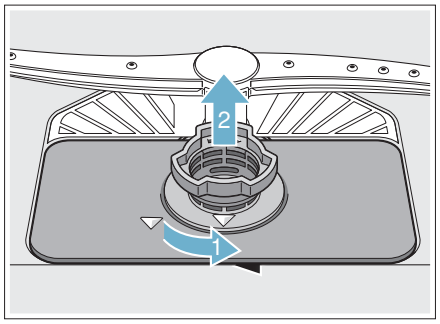

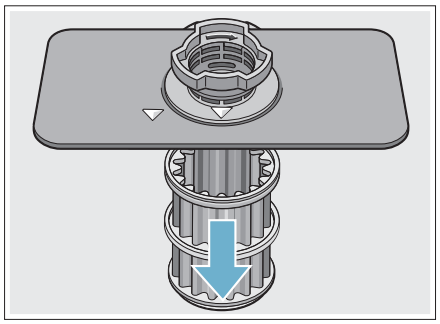

2. Remove any residue and clean filters by rinsing under running water. Note: do not use abrasive brushes or steel wool, etc., as they may damage the filter.
3. Reinstall the filter system in reverse sequence and lock into place by screwing the Large Object Trap until the marking arrows align.

Spray arms

Check spray arms [23], [26] for grease and limescale deposits. If you find such deposits:

- Fill detergent dispenser [32] with detergent and start the appliance without utensils in the cycle with the highest rinsing temperature. → *"Wash Cycle Information" on page 24*
- Clean the appliance with detergents/appliance cleaners which are particularly suitable for use with dishwashers.
- Unscrew the upper spray arm [23] and pull off the lower spray [26] arm as shown. Inspect for deposits.

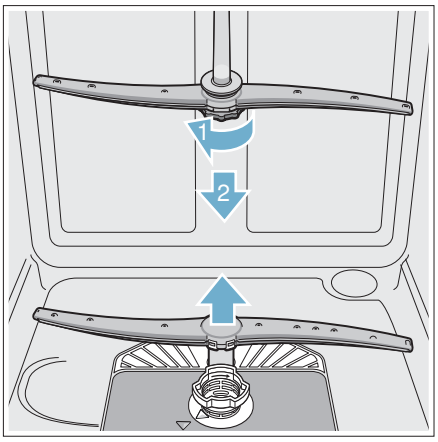

Drain pump

Large food remnants in the rinsing water not retained by the filters may block the waste water pump. In this case:

- Disconnect the appliance from the power supply.
- Remove the filters. ⟶ *"Filters" on page 30*
- Scoop out standing water - use a sponge if necessary.
- Using a spoon, pry off the pump cover until it clicks, then grip the cover and pull upward until it resists and then pull forward.

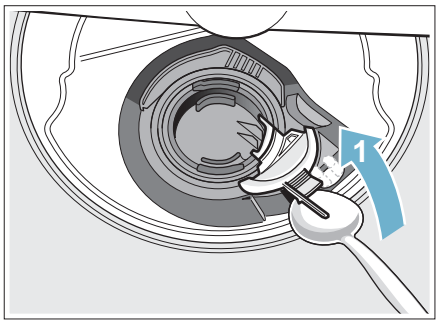

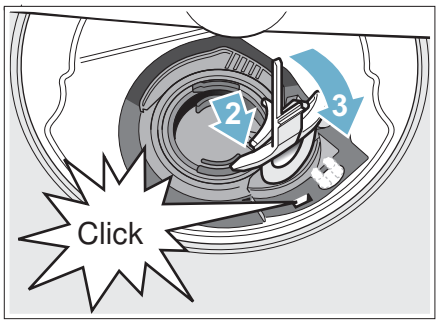

- Check inner compartment and remove any foreign objects.

⚠ WARNING

Use caution when removing parts for cleaning as some debris may be sharp.

- Place cover in the original position, press down and engage.
- Reinstall filters.

Note: The drain pump will not work properly if the drain pump cover is not snapped in completely until it clicks.

Preparing your unit for vacation

NOTICE

Before leaving for vacation during warmer weather, besides turning off the main valve, also turn off water supply at the nearest point to the dishwasher. Do not leave soiled dishware in unit and leave door slightly open. During colder weather, please follow the instructions for winterizing your unit below.

Winterizing your unit

NOTICE

If your dishwasher will be unused for a period of time in a location that experiences freezing temperatures (holiday home or through a vacation period), have your dishwasher winterized by a professional service.

Troubleshooting

Dishwashers may occasionally exhibit problems that are unrelated to a malfunction of the dishwasher itself.

The following information may help you with a dishwasher problem without involving a repair professional.

Problem	Cause	Action
Dishwasher does not start	Door may not be properly latched.	Shut the door completely until you hear a click.
	Dishwasher may not be turned on.	Press the main power switch 1 to turn dishwasher on.
	Dishwasher not reset or previous cycle not completed.	Reset the dishwasher.
	Delay start engaged.	Reset Delay start. ⟶ *"Delay Start" on page 27*
	Interruption of electrical power supply to dishwasher or blown fuse.	Check circuit breaker.
	The door may have been closed without first selecting a cycle.	Select a cycle and close the door.
	Water supply may not be turned on.	Check and turn on water supply.
Cycle does not resume after door is opened and closed during cycle.	Door is opened longer than 4 seconds after a cycle has started.	Press **Start** button again to resume cycle.
Display does not illuminate	A fuse may have been blown or circuit breaker tripped.	Check the fuse or circuit breaker box and replace the fuse or reset the breaker if necessary.
	Door not closed or latched. **Note:** For models with controls on top of the door, the display only illuminates when the door is opened and controls are visible.	Ensure door is properly latched and completely closed.

Dishwasher seems to run a long time	Incoming water is not warm enough.	Before starting a cycle, run hot water faucet at the sink closest to the dishwasher.
	Cycle time can vary due to soil and water conditions.	Sensors in the dishwasher automatically increase the cycle time to ensure a good wash when heavy soil is detected.
	Rinse aid dispenser [31] is empty, or rinse aid setting has been set to "0".	Add rinse aid, or change rinse aid setting.
	Dishwasher connected to cold water supply. **Note:** Check the typical wash cycle length. ⟶ *"Wash Cycle Information" on page 24*	Verify dishwasher is connected to hot water supply plumbing.
Dishes are not getting clean enough	Spray arm movement obstructed.	Ensure that spray arm movement is not blocked by hand rotating spray arms [23], [26] before starting cycle.
	Spray arm nozzles clogged.	Remove spray arms [23], [26] and clean them. ⟶ *"Spray arms" on page 31*
	Improper use of detergents.	Increase or decrease detergent depending on the water hardness.
	Filters [28] could be clogged.	Clean the filters [28]. ⟶ *"Filter components" on page 30*
	Dishes are nested or loaded too closely together.	Rearrange load such that water spray can reach all items in the dishwasher. ⟶ *"Loading the Dishwasher" on page 13*
	Selected wash cycle is not suitable for food soil conditions.	Refer to Wash Cycle Information. ⟶ *"Wash Cycle Information" on page 24*
Streaks on glassware or residue on the dishes	Incorrect rinse aid setting.	Depending on the hardness of water, adjust the rinse agent dispenser [31]. ⟶ *"Rinse Aid" on page 12*
Dishes are not getting dry enough **Note:** Plastic or Teflon do not typically dry as well as other items due to their inherent properties.	Rinse aid dispenser [31] is empty or incorrect rinse aid amount is set.	Add rinse aid or adjust setting - the use of rinse agent improves drying, use the Auto cycle, use the Sanitize option.
	Improper loading of dishes.	Rearrange load to ensure items are not nesting. ⟶ *"Loading the Dishwasher" on page 13* **Note:** Select models offer an extra heating option to improve drying performance.

Odor **Note:** Water testing is done in the factory. Occasionally water may still appear in dishwasher at purchase which may create an odor.	Food debris is present at the bottom of the dishwasher.	Remove the filters and clean them. ⟶ *"Care and Maintenance" on page 29*
	Food particles are present near the door seal.	⟶ *"Care and Maintenance" on page 29*
	Residual water is present at the bottom of the dishwasher.	Ensure the dishwasher has completely drained from the last cycle.
	Drain hose is obstructed.	Remove any obstructions from the drain hose by calling qualified personnel. **Note:** If odor still persists, run the Normal/ Regular cycle until it flushes and interrupt the cycle and place an 8 oz. cup of distilled white vinegar solution on the upper rack and then finish the cycle.
Dishwasher not filling with water or "Check water supply" display lights up	Restriction in the water supply system.	Ensure that the water supply valve (typically located under kitchen sink) is open and check that the water supply line has no kinks or clogs.
	Previous wash cycle was not completed.	⟶ *"Operating the Dishwasher" on page 26*
	Delay start is active.	Cancel the delay start or wait until delay start time completes.
	Household water supply turned off.	Turn on water supply.
Fascia panel discolored or marked	Abrasive cleaner used.	Use mild detergents with soft damp cloth.
Noise during wash cycle	Dishes may not be arranged properly.	Water circulation sound is normal, but if you suspect items are banging into each other or into the spray arms, check optimal arrangement of dishes. ⟶ *"Loading the Dishwasher" on page 13*
Water leaks	Suds.	Using wrong type of detergent or overfilling the rinse aid dispenser results in suds and leaks - use only dishwasher detergents. If suds still persist, add one tablespoon of vegetable oil at the bottom of the dishwasher and run the desired cycle.
	Door seal could be pulled away from track.	Ensure the door seal is in the track.
	Condensation vent is blocked.	Ensure that condensation vent is not blocked.
	Improper installation.	Have proper installation verified by qualified personnel (water supply, drain system, leveling, plumbing).

Tub stains	Stains on the dishwasher interior are due to water hardness.	Concentrated lemon juice can reduce the build-up of hard water stains. Run Normal/Regular cycle until it flushes and interrupt the cycle and then place an 8 oz. cup of the concentrated lemon solution on the upper rack and finish the cycle. This can be done periodically to avoid build-up.
	Silverware in contact with tub.	Ensure that silverware does not make contact with the tub while running a cycle.
Detergent dispenser cover will not shut	Improper operation of detergent cover.	For instructions on opening and closing the dispenser ⟶ *"Detergent" on page 21*
	Previous cycle was not finished or interrupted.	⟶ *"Operating the Dishwasher" on page 26*
Unable to select desired cycle	Previous cycle not finished.	⟶ *"Operating the Dishwasher" on page 26*

Customer Service

Your Bosch® dishwasher requires no special care other than that described in the Care and Maintenance section of this manual. If you are having a problem with your dishwasher, before calling for service please refer to the Troubleshooting Guide section of the manual. If service is necessary, contact your dealer or installer or an authorized service center. Do not attempt to repair the appliance yourself. Any work performed by unauthorized personnel may void the warranty.

If you are having a problem with your Bosch® dishwasher and are not pleased with the service you have received, please take the following steps until the problem is corrected to your satisfaction:

1. Call us at 1-800-944-2904
2. Contact Customer Service from our web site: **www.bosch-home.com/us** or **www.bosch-home.ca**
3. Contact your installer or the Bosch Authorized Service Contractor in your area.
4. Write us:

BSH Home Appliances Corporation
1901 Main Street
Irvine, CA 92614

Please be sure to include your model information as well as an explanation of the problem and the date it started. You will find the model and serial number information on the label located on the edge of the dishwasher door. Please make a copy of your invoice and keep it with this manual. The customer may be required to show proof of purchase to validate warranty coverage.

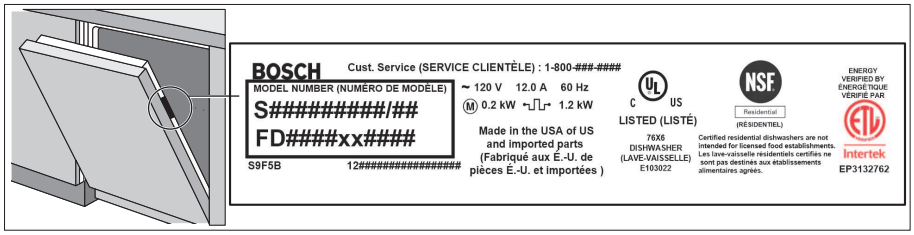

Statement of Limited Product Warranty

What this Warranty Covers & Who it Applies to:

The limited warranty provided by BSH Home Appliances Corporation (BSH) in this Statement of Limited Product Warranty applies only to Bosch® dishwashers (“Product”) sold to you, the first using purchaser, provided that the Product was purchased:

- for your normal, household (non-commercial) use, and has in fact at all times only been used for normal household purposes;
- new at retail (not a display, “as is”, or previously returned model), and not for resale, or commercial use; and
- within the United States or Canada, and has at all times remained within the country of original purchase. The warranties stated herein apply only to the first purchaser of the Product and are not transferable.

Please make sure to return your registration card; while not necessary to effectuate warranty coverage, it is the best way for BSH to notify you in the unlikely event of a safety notice or product recall.

How Long the Warranty Lasts

BSH warrants that the Product is free from defects in materials and workmanship for a period of three hundred sixty five (365) days from the date of purchase. The foregoing timeline begins to run upon the date of purchase, and shall not be stalled, tolled, extended, or suspended, for any reason whatsoever.

This Product is also warranted to be free from **cosmetic** defects in material and workmanship (such as scratches of stainless steel, paint/porcelain blemishes, chip, dents, or other damage to the finish of the Product), for a period of thirty (30) days from the date of purchase or closing date for new construction. This **cosmetic** warranty excludes slight color variations due to inherent differences in painted and porcelain parts, as well as differences caused by kitchen lighting, product location, or other similar factors. This **cosmetic** warranty specifically excludes any display, floor, “As Is”, or “B” stock appliances.

Extended Limited Warranty

BSH also provides these additional limited warranties:

- 5 year limited warranty on electronics: BSH will repair or replace any BSH microprocessor or printed circuit board if it proves to be defective in materials or workmanship (excludes labor charges).
- 5 year limited warranty on dish racks: BSH will replace the upper or lower dish rack (excluding rack components), if the rack proves defective in materials or workmanship (excludes labor charges).
- Lifetime warranty against stainless steel rust through: BSH will repair or replace your dishwasher with the same model or a current model that is substantially equivalent or better in functionality, if the inner liner should rust through (excludes labor charges).
- BSH will repair or replace the stainless steel door if the door should rust through (excludes labor charges).

Repair/Replace as Your Exclusive Remedy

During this warranty period, BSH or one of its authorized service providers will repair your Product without charge to you (subject to certain limitations stated herein) if your Product proves to have been manufactured with a defect in materials or workmanship. If reasonable attempts to repair the Product have been made without success, then BSH will replace your Product (upgraded models may be available to you, in the sole discretion of BSH, for an additional charge). All removed parts and components shall become the property of BSH at its sole option. All replaced and/or repaired parts shall assume the identity of the original part for purposes of this warranty and this warranty shall not be extended with respect to such parts. BSH's sole liability and responsibility hereunder is to repair manufacturer-defective Product only, using a BSH-authorized service provider during normal business hours. For safety and property damage concerns, BSH highly recommends that you do not attempt to repair the Product yourself, or use an unauthorized servicer; BSH will have no responsibility or liability for repairs or work performed by a non-authorized servicer. If you choose to have someone other than an authorized service provider work on your Product, **THIS WARRANTY WILL AUTOMATICALLY BECOME NULL AND VOID**. Authorized service providers are those persons or companies that have been specially trained on BSH products, and who possess, in the opinion of BSH, a superior reputation for customer service and technical ability (note that they are independent entities and are not agents, partners, affiliates or representatives of BSH). Notwithstanding the foregoing, BSH will not incur any liability, or have responsibility, for the Product if it is located in a remote area (more than 100 miles from an authorized service provider) or is reasonably inaccessible, hazardous, threatening, or treacherous locale, surroundings, or environment; in any such event, if you request, BSH would still pay for labor and parts and ship the parts to the nearest authorized service provider, but you would still be fully liable and responsible for any travel time or other special charges by the service company, assuming they agree to make the service call.

Out of Warranty Product

BSH is under no obligation, at law or otherwise, to provide you with any concessions, including repairs, pro-rates, or Product replacement, once this warranty has expired.

Warranty Exclusions

The warranty coverage described herein excludes all defects or damage that are not the direct fault of BSH, including without limitation, one or more of the following:

- Use of the Product in anything other than its normal, customary and intended manner (including without limitation, any form of commercial use, use or storage of an indoor product outdoors, use of the Product in conjunction with air or water-going vessels);

- Any party's willful misconduct, negligence, misuse, abuse, accidents, neglect, improper operation, failure to maintain, improper or negligent installation, tampering, failure to follow operating instructions, mishandling, unauthorized service (including self-performed "fixing" or exploration of the appliance's internal workings);
- Adjustment, alteration or modification of any kind;
- A failure to comply with any applicable state, local, city, or county electrical, plumbing and/or building codes, regulations, or laws, including failure to install the product in strict conformity with local fire and building codes and regulations;
- Ordinary wear and tear, spills of food, liquid, grease accumulations, or other substances that accumulate on, in, or around the Product;
- Any external, elemental and/or environmental forces and factors, including without limitation, rain, wind, sand, floods, fires, mud slides, freezing temperatures, excessive moisture or extended exposure to humidity, lightning, power surges, structural failures surrounding the appliance, and acts of God.

In no event shall BSH have any liability or responsibility whatsoever for damage to surrounding property, including cabinetry, floors, ceilings, and other structures or objects around the Product. Also excluded from this warranty are Products on which the serial numbers have been altered, defaced, or removed; service visits to teach you how to use the Product, or visits where there is nothing wrong with the Product; correction of installation problems (you are solely responsible for any structure and setting for the Product, including all electrical, plumbing or other connecting facilities, for proper foundation/flooring, and for any alterations including without limitation cabinetry, walls, floors, shelving, etc.); and resetting of breakers or fuses.

TO THE EXTENT ALLOWED BY LAW, THIS WARRANTY SETS OUT YOUR EXCLUSIVE REMEDIES WITH RESPECT TO PRODUCT, WHETHER THE CLAIM ARISES IN CONTRACT OR TORT (INCLUDING STRICT LIABILITY, OR NEGLIGENCE) OR OTHERWISE. THIS WARRANTY IS IN LIEU OF ALL OTHER WARRANTIES, WHETHER EXPRESS OR IMPLIED. ANY WARRANTY IMPLIED BY LAW, WHETHER FOR MERCHANTABILITY OR FITNESS FOR A PARTICULAR PURPOSE, OR OTHERWISE, SHALL BE EFFECTIVE ONLY FOR THE PERIOD THAT THIS EXPRESS LIMITED WARRANTY IS EFFECTIVE. IN NO EVENT WILL THE MANUFACTURER BE LIABLE FOR CONSEQUENTIAL, SPECIAL, INCIDENTAL, INDIRECT, "BUSINESS LOSS", AND/OR PUNITIVE DAMAGES, LOSSES, OR EXPENSES, INCLUDING WITHOUT LIMITATION TIME AWAY FROM WORK, HOTELS AND/OR RESTAURANT MEALS, REMODELLING EXPENSES IN EXCESS OF DIRECT DAMAGES WHICH ARE DEFINITIVELY CAUSED EXCLUSIVELY BY BSH, OR OTHERWISE. SOME STATES DO NOT ALLOW THE EXCLUSION OR LIMITATION OF INCIDENTAL OR CONSEQUENTIAL DAMAGES, AND SOME STATES DO NOT ALLOW LIMITATIONS ON HOW LONG AN IMPLIED WARRANTY LASTS, SO THE ABOVE LIMITATIONS MAY NOT APPLY TO YOU. THIS WARRANTY GIVES YOU SPECIFIC LEGAL RIGHTS, AND YOU MAY ALSO HAVE OTHER RIGHTS WHICH VARY FROM STATE TO STATE. No attempt to alter, modify or amend this warranty

shall be effective unless authorized in writing by an officer of BSH Home Appliances Corporation.

How to Obtain Warranty Service

TO OBTAIN WARRANTY SERVICE FOR YOUR PRODUCT, YOU SHOULD CONTACT THE NEAREST BSH AUTHORIZED SERVICE CENTER, OR CALL 1-800-944-2904

BSH reserves the right to change specifications or design without notice. Some models are certified for use in Canada. BSH is not responsible for products which are transported from the United States for use in Canada. Check with your local Canadian distributor or dealer.

BSH se réserve le droit de modifier les données techniques ou le design sans préavis. Certains modèles sont certifiés pour une utilisation au Canada. BSH n'est pas responsable pour les produits transportés des États-Unis pour une utilisation au Canada. Vérifier auprès d'un marchand ou distributeur canadien.

BSH Home Appliances Corporation
1901 Main Street, Suite 600
Irvine, CA 92614
1-800-944-2904

9001238233
(9609)