English **250 A**

OWNER'S MANUAL

IMPORTANT SAFETY RULES

Read, understand, and follow all instructions carefully before installing and using this product.

PureSpa™

SPJ-H-20-1

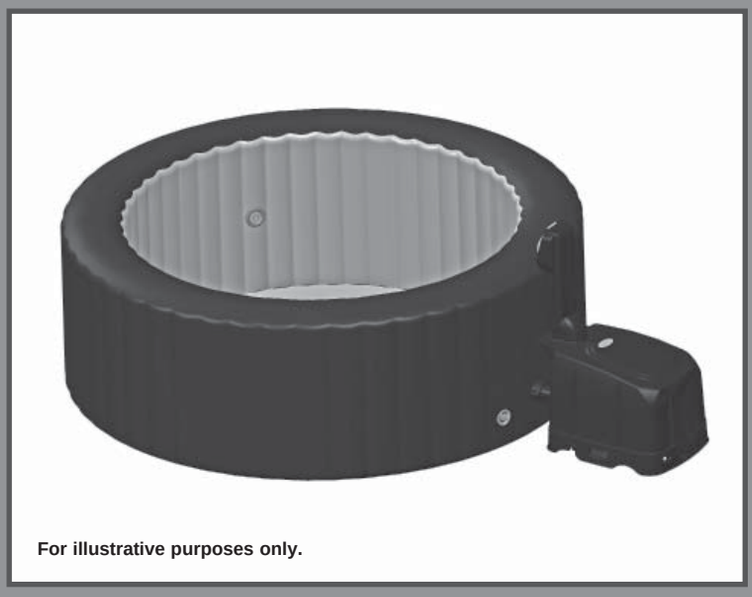

For illustrative purposes only.

Do not forget to try these other fine Intex products: pools, pool accessories, in-home toys, airbeds and boats available at fine retailers or visit our website.

Due to a policy of continuous product improvement, Intex reserves the right to change specifications and appearance, which may result in updates to the instruction manual without notice.

INTEX®

©2014 Intex Marketing Ltd. - Intex Development Co. Ltd. - Intex Trading Ltd. - Intex Recreation Corp.
All rights reserved/Tous droits réservés/Todos los derechos reservados/Alle Rechte vorbehalten. Printed in China/Imprimé en Chine/Impreso en China/Gedruckt in China.

®™ Trademarks used in some countries of the world under license from/®™ Marques utilisées dans certains pays sous licence de/ Marcas registradas utilizadas en algunos países del mundo bajo licencia de/Warenzeichen verwendet in einigen Ländern der Welt in Lizenz von/**Intex Marketing Ltd. to/à/a/an Intex Trading Ltd., Intex Development Co. Ltd., G.P.O Box 28829, Hong Kong & Intex Recreation Corp., P.O. Box 1440, Long Beach, CA 90801** • Distributed in the European Union by/Distribué dans l'Union Européenne par/Distribuido en la unión Europea por/Vertrieb in der Europäischen Union durch/**Intex Trading B.V., Venneveld 9, 4705 RR Roosendaal – The Netherlands**
www.intexcorp.com

250-*A*-R1-1512

TABLE OF CONTENTS

Warning..... 3-5

Parts..... 6-7

Set-up..... 8-11

Operation..... 12

LED Code Chart..... 13

Maintenance and Chemicals..... 14-19

Storage..... 19

Troubleshooting..... 20

Warranty..... 21

IMPORTANT SAFETY RULES

When installing and using this electrical equipment, basic safety precautions should always be followed, including the following.

READ AND FOLLOW ALL INSTRUCTIONS

⚠ DANGER

- Risk of Accidental Drowning. Extreme caution must be exercised to prevent unauthorized access by children. To avoid accidents, ensure that children cannot use this spa unless they are supervised at all times.
- Risk of drowning. Inspect the spa cover regularly for leaks, premature wear and tear, damage, or signs of deterioration. Never use a worn or damaged cover: it will not provide the level of protection required to prevent unsupervised access to the spa by a child.
- Risk of injury. Replace damaged cord immediately. Do not bury cord.
- Risk of Electric Shock. Do not permit any electric appliance, such as a light, telephone, radio, or television, within 3.5 m (11.5 feet) of a spa or hot tub.
- Risk of Electric Shock. Do not use the spa when it is raining, thundering or lightning.

⚠ WARNING

- The spa electrical appliance should be supplied through a residual current device (RCD) having a rated residual operating current not exceeding 10 mA.
- Parts containing live parts, except parts supplied with safety extra-low voltage not exceeding 12V, must be inaccessible to a person in the spa.
- Electrical installation shall fulfill the requirements of local national standards.
- Parts incorporating electrical components, except remote control devices, must be located or fixed so that they cannot fall into the spa.
- To reduce the risk of injury, do not permit children to use this product unless they are closely supervised at all times.
- Children should not use spas or hot tubs without adult supervision.
- To reduce the risk of child drowning, supervise children at all times. Attach and lock spa cover after each use.
- To reduce the risk of injury:

a) The water in a spa should never exceed 40°C (104°F). Water temperatures between 38°C (100°F) and 40°C (104°F) are considered safe for a healthy adult. Lower water temperatures are recommended for young children and when spa use exceeds 10 minutes.

b) Since excessive water temperatures have a high potential for causing fetal damage during the early months of pregnancy, pregnant or possibly pregnant women should limit spa water temperatures to 38°C (100°F).

c) Before entering a spa or hot tub, the user should measure the water temperature with an accurate thermometer since the tolerance of water temperature-regulating devices varies.

d) The use of alcohol, drugs, or medication before or during spa use may lead to unconsciousness with the possibility of drowning.

e) Obese persons and persons with a history of heart disease, low or high blood pressure, circulatory system problems, or diabetes should consult a physician before using a spa.

f) Persons using medication should consult a physician before using a spa since some medication may induce drowsiness while other medication may affect heart rate, blood pressure, and circulation.

SAVE THESE INSTRUCTIONS

⚠ WARNING

g) People using medications and/or having an adverse medical history should consult a physician before using a spa or hot tub.

h) Check with a doctor before use if pregnant, diabetic, in poor health, or under medical care.

- People with infectious diseases should not use a spa or hot tub.
- To avoid injury exercise care when entering or existing the spa or hot tub.
- Do not use drugs or alcohol before or during the use of a spa or hot tub to avoid unconsciousness and possible drowning.
- Pregnant and possible pregnant women should consult a physician before using a spa or hot tub.
- Water temperature in excess of 38ºC degree may be injurious to your health.
- Do not use a spa or hot tub immediately following strenuous exercise.
- Prolonged immersion in a spa or hot tub may be injurious to your health.
- When pregnant, soaking in hot water for long periods can harm your fetus. Measure the water temperature before entering. Do not enter spa if water is hotter than 38°C (100°F). Do not stay in spa for longer than 10 minutes.
- Spa heat in conjunction with alcohol, drugs, or medication can cause unconsciousness.
- Exit immediately if uncomfortable, dizzy, or sleepy. Spa heat can cause hyperthermia and unconsciousness.
- The causes, symptoms, and effects of hyperthermia may be described as follows: Hyperthermia occurs when the internal temperature of the body reaches a level several degrees above the normal body temperature of 37°C (98.6°F). The symptoms of hyperthermia include an increase in the internal temperature of the body, dizziness, lethargy, drowsiness, and fainting. The effects of hyperthermia include failure to perceive heat; failure to recognize the need to exit spa or hot tub; unawareness of impending hazard; fetal damage in pregnant women; physical inability to exit the spa or hot tub; and unconsciousness resulting in the danger of drowning.
- The use of alcohol, drugs, or medication can greatly increase the risk of fatal hyperthermia in hot tubs and spas.
- Always add chemicals to water, never add water to chemicals. Adding water to chemicals may cause strong fumes or violent reactions and hazardous chemical spray.
- Never jump or dive into a spa or any shallow body of water.
- Assembly and disassembly by adults only.
- This appliance can be used by children aged from 8 years and above and persons with reduced physical, sensory or mental capabilities or lack of experience and knowledge if they have been given supervision or instruction concerning use of the appliance in a safe way and understand the hazards involved. Children shall not play with the appliance. Cleaning and user maintenance shall not be made by children without supervision.
- No part of the electrical appliance is to be located above the bath during use.
- Keep the plug of this product more than 4m away from the spa and at a height of 1.2m at least.
- Always unplug this product from the electrical outlet before removing, cleaning, servicing or making any adjustment to the product.
- Do not bury the electrical cord. Locate the cord where it will not be damaged by lawn mowers, hedge trimmers and other equipment.
- If the supply cord is damaged, it must be replaced by the manufacturer, its service agent or similarly qualified persons in order to avoid a hazard. Use only identical replacement parts when servicing.

SAVE THESE INSTRUCTIONS

⚠ WARNING

- To reduce the risk of electric shock, do not use extension cords, timers, plug adaptors or converter plugs to connect unit to electrical supply; provide a properly located outlet.
- Do not attempt to plug in or unplug this product while standing in water or when your hands are wet.
- Do not leave the spa empty for extended period of time. Do not expose the spa under direct sunshine.
- Adequate drainage system must be provided around the spa to deal with overflow water.
- Do not allow the water in the spa to freeze. Do not turn on the spa when the water is frozen.
- Do not use the spa if damaged in delivery and/or malfunctioning in any fashion. Contact the Intex service center for further direction.
- Never use the spa alone or allow others to use the spa alone.
- Never pour water with a temperature higher than 40°C (104°F) into the spa directly.
- Keep all pets away from spa to avoid any damage.
- Do not add bath oil or bath salt to the spa water.
- The spa must be setup on a level, flat and smooth surface that is capable of supporting the maximum load of the filled spa with four adult occupants; weight 1136Kg (2500 lbs).
- Provide adequate drainage system around the spa to deal with overflow water and splashes.

⚠ WARNING

- This product is provided with a RCD located at the end of the power cord. The RCD must be tested before each use. Do not use the spa if the RCD does not function properly. Disconnect the power cord until the fault has been identified and corrected. Contact a qualified electrician to correct the fault. Do not bypass the RCD. There are no serviceable parts inside the RCD. Opening the RCD will void the warranty.

1. Press the **RESET** button on the RCD**.**
2. Turn on the spa electrical equipment.
3. Press the **TEST** button on the RCD**.** The RCD indicator should turn off and the electrical equipment should shut off. If the RCD indicator does not turn off, and the electrical equipment does not shut off, the RCD is faulty.
   Do not use the spa. Contact a qualified electrician to correct the fault.
4. Press the **RESET** button on the RCD. The indicator on the RCD should turn on. If the RCD indicator does not turn on, the RCD is faulty. Do not use the spa.
   Contact a qualified electrician immediately to correct the fault.

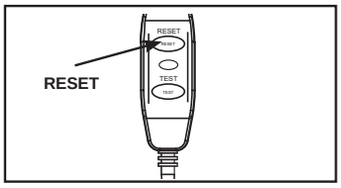

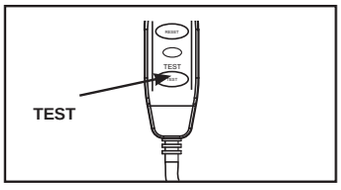

⚠ CAUTION

- Maintain water chemistry in accordance with manufacturer's instructions.

PARTS

Before assembling your product, please take a few minutes to check the contents and become familiar with all the parts.

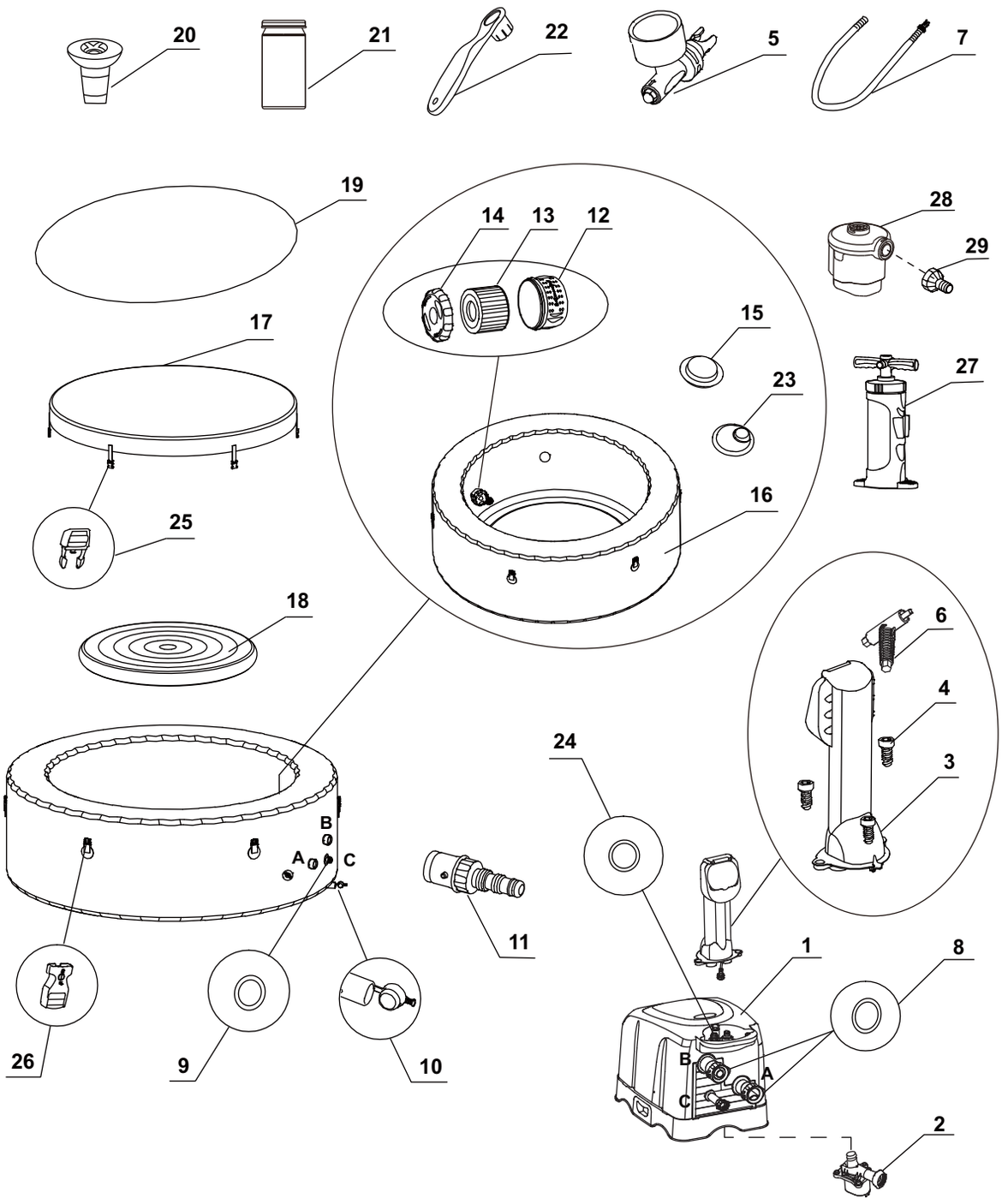

NOTE: Drawings for illustration purpose only. Actual product may vary. Not to scale.

PARTS (continued)

Before assembling your product, please take a few minutes to check the contents and become familiar with all the parts.

REF. NO.	DESCRIPTION	QTY.	PART NO.
1	CONTROL BASE	1	11894
2	SPA FILTER MOTOR	1	11888
3	CONTROL PANEL (INCLUDED #4)	1	11936
4	CONTROL PANEL BOLT	3	11786
5	PRESSURE GAUGE	1	11741
6	CONTROL PANEL BOLT WRENCH	1	11053
7	SPA INFLATION HOSE	1	11830
8	SPA CONTROL INLET/OUTLET O-RING	2	11788
9	SPA CONTROL JET AIR INLET O-RING	1	11699
10	SPA DRAIN PLUG	1	11696
11	SPA DRAIN VALVE ADAPTOR	1	11718
12	FILTER CARTRIDGE HOUSING	1	11798
13	FILTER CARTRIDGE	2	11692
14	FILTER CARTRIDGE HOUSING LID	1	11797
15	INLET PLUG	1	11739
16	SPA TUB	1	11892
17	SPA COVER	1	11784
18	SPA COVER INFLATABLE BLADDER (PRE-INSTALLED IN SPA COVER)	1	11689
19	GROUND CLOTH	1	11717
20	CHEMICAL DISPENSER	1	11614
21	TEST STRIPS	1	11855
22	WRENCH	1	11742
23	OUTLET PLUG	2	11782
24	CONTROL PANEL JET AIR HOSE CONNECTION O-RING	1	11711
25	MALE BUCKLE	6	11850
26	FEMALE BUCKLE	6	11849
27	MANUAL AIR PUMP	1	11960
28	ELECTRIC AIR PUMP	1	11962
29	INFLATION PUMP ADAPTOR	1	11964

When ordering parts, be sure to quote the model number and part numbers.

PRODUCT SPECIFICATIONS

Maximum seating capacity:	4 adults
Water capacity:	210 gal (795 L)
Inner/outer diameter:	57/77 in (145/196 cm)
Height:	28 in (71 cm)
Jet pump:	0.9HP / 220-240 V / 50 Hz
Filter pump flow rate:	460 gal/hr (1,741 L/hr)
Heater power:	2,200 Watts / 220-240 V / 50Hz
Temperature range:	20ºC – 40ºC (68ºF – 104ºF)
Temperature rise:	1.5-2.5ºC/hr (3ºF – 4.5ºF/hr)
Number of Water Jet Nozzles:	4
Spa tub recommended working air pressure:	0.083 bar (1.2 psi)

Cord-connected spa with pump, heater, water jet, built-in hard water treatment and control panel.

This product requires a minimum of 13 Amps. If the circuit breaker trips, please check that no other appliances or other large loads are on the same circuit as the spa.

SET UP

Site preparation and requirements

- The spa can be installed indoor or outdoor. For household use only.
- Make sure the area is free of sharp objects under or around the spa.
- Provide a properly located power outlet to connect the spa and allow easy access for periodic testing of the cord mounted RCD.
- Make sure there is enough clearance around the spa for full access to the spa equipment for maintenance and/or service.
- The area shall facilitate draining purposes during long term spa storage.

Additional requirements for indoor installation

- Make sure the floor can support the full weight of the filled spa with the maximum number of occupants. Check with a qualified contractor or a structural engineer to verify this requirement.
- Make sure the floor is water resistant and non-slip surface. Do not install the spa on carpet or other materials that will be damaged by moisture, condensation.
- Do not install the spa indoors on a second floor above finished living space due to the possibility of water and humidity damage.
- Humidity is a natural side effect of indoor spa installation. The room shall be properly ventilated to allow moisture to escape. Install a ventilating system to prevent excess condensation, moisture in the room.

Additional requirements for outdoor installation

- Spa owners may need to comply with local or states laws relating to childproof fencing, safety barriers, lighting, and other safety requirements. Contact your local building code enforcement office for further details.
- Make sure the surface is level, flat, smooth and strong enough to support the full weight of the filled spa.
- Do not setup the spa on grass or dirt, as this increases the amount of debris entering the spa, and damage the spa floor.
- **Do not expose the spa to direct sunlight for extended period of time.**
- It is possible to install and leave the spa outside at a temperature not lower than 4°C (39°F) provided the water temperature inside the spa is higher than 4°C (39°F) and the water inside the circulation system, pump, pipe are not frozen. Put a "temp barrier mat" between the spa floor and the ground to prevent heat loss from the bottom of the spa and to provide better heat retention.

SET UP (continued)

Setup the spa with at least 2 persons.

1. Move the entire package to the selected site. Do not drag the spa tub across the ground as this can cause damage and leakage.
   Open the carton carefully as this carton can be used to store the spa during long term storage or when not in use.
2. Lay out all the parts on the ground and make sure all the parts are accounted for**.** For missing or damaged parts contact the appropriate Intex Service Center listed in the separate "Authorized service Centers" sheet.

Spa Control Unit Assembly

1. Connect the control panel **(3)** cable plug into the receptacle on top of the spa control base and screw in the plug cover firmly by hand **(see drawing 1). Note:** Spread the ground cloth with the bubbles facing down over the cleared area where you intend to setup your spa.
2. Screw the control panel bolts **(4)** with the provided bolt wrench **(6)** to secure the control panel **(see drawing 2).**
3. Plug the spa control unit into an electrical outlet.

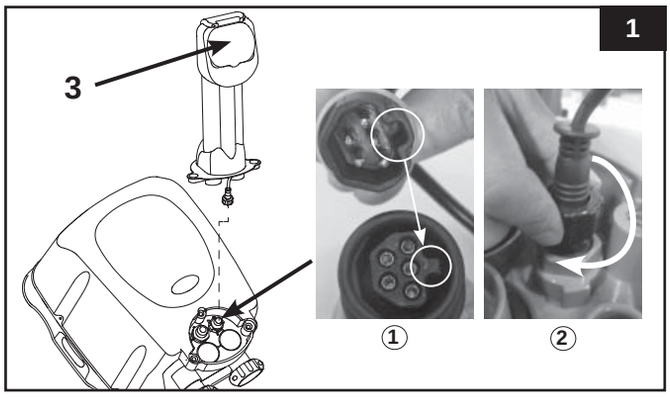

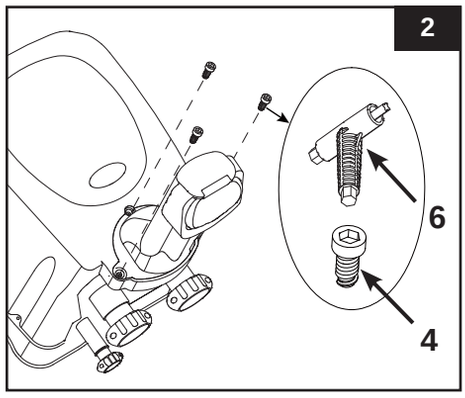

For indoor inflation:
Inflate the Spa Tub Wall

1. Take out the ground cloth **(19)** and spread it over the cleared area. Then spread out the spa liner over the ground cloth and point the drain valve towards a suitable draining area.
2. Assemble the inflation pumps by aligning the ridge on the electric pump with the groove on the manual pump **(see drawing 3.1).**
3. Connect one end of the inflation hose **(7)** to the electric air pump **(see drawing 3.2)**.
4. Unscrew the air valve cap to reveal the stem in the up position for inflation. Insert the other end of the inflation hose **(7)** into the valve and turn to the right to lock it in position **(see drawing 4)**.
5. Turn on the electric air pump to inflate the spa tub for 6 - 8 minutes.
6. Turn off the electric air pump. Disconnect the inflation hose **(7)** from the electric air pump, then connect it to the manual air pump and inflate the spa tub for 1 – 2 minutes to provide the extra firmness to the spa tub **(see drawing 5)**.
   IMPORTANT: Do not over inflate or use high pressure air compressor to inflate.

SET UP (continued)

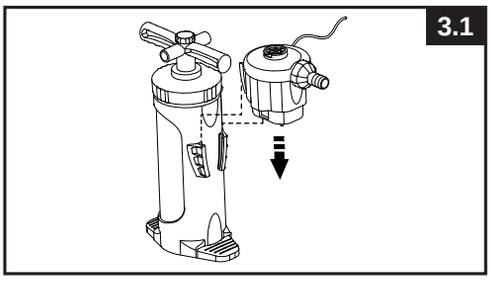

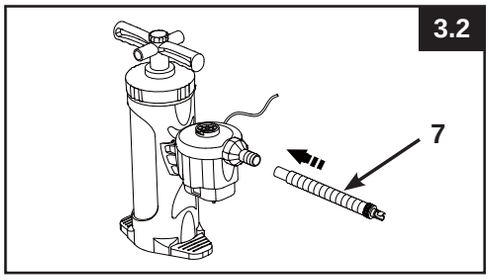

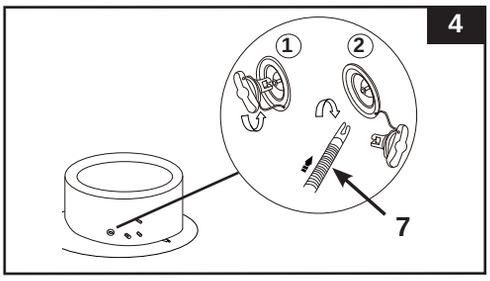

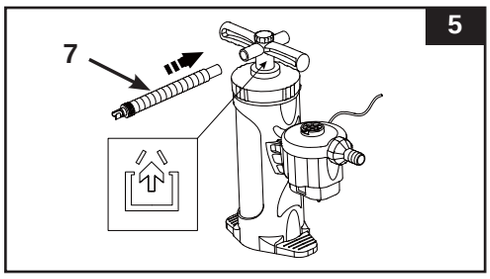

7. Disconnect the inflation hose **(7)** from the air valve and the inflation pump, and attach the pressure gauge **(5)** to the air valve. The pressure gauge indicator should be in the green area for a properly inflated spa tub **(see drawing 6)**. Repeat previous steps to add more air if necessary.
8. Replace the air valve cap back.
   NOTE: The cap is designed to be screwed on and off. Never exert force as this could cause the complete internal inflation system of the valve to come loose. See "Spa Tub Air Valve Fastening" for valve maintenance.

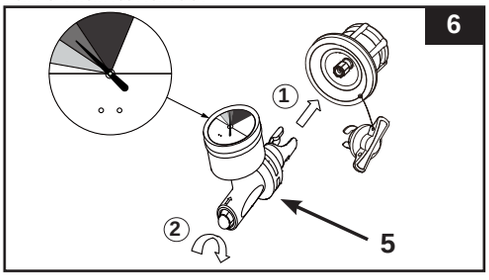

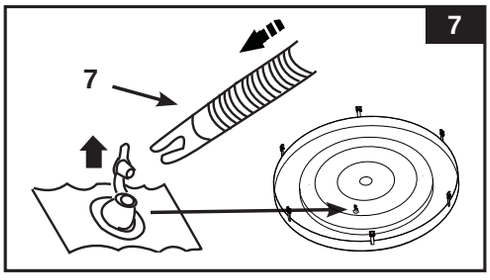

Inflate the Spa Cover Air Bladder

1. Open the inflation valve and insert one end of the inflation hose **(7)** into the valve, the other end to the electric air pump; turn on the pump to inflate until the air bladder is firm to the touch but not hard **(see drawing 7).**
2. Disconnect the inflation hose **(7)** from the valve and the inflation air pump.
3. Close and recess the inflation valve.

NOTE: If there is a need to add some air to the spa tub wall or spa cover air bladder after they have been setup, refer to above "Inflate the Spa Tub Wall" and "Inflate the Spa Cover Air Bladder" sections. The cover air bladder is preinstalled inside the spa cover. If it needs to be reinstalled, place the uninflated air bladder inside the spa cover lip before inflating the bladder.

For outdoor inflation:

For outdoor set up, it's recommended to use the manual air pump only to inflate the spa tub and cover air bladder.

SET UP (continued)

Deflation
For Spa Tub Wall:

1. Unscrew the cap to reveal the stem, push the stem in and turn 90 degree right to secure it in the down position **(see drawing 8).**
2. Once the deflation is completed, push the stem in and turn 90 degree left to return it to the inflation position.
3. Replace the cap back.

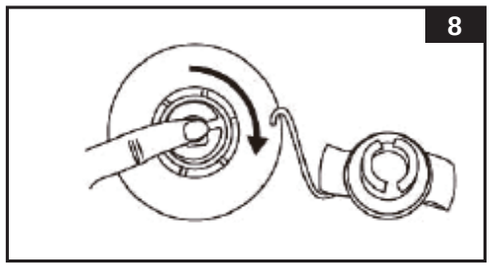

For Cover Air Bladder:

1. Pull valve cap out and squeeze the valve at its base until deflated.
2. Close and recess the valve back.

Spa Control Unit Installation

1. Connect the spa control unit to the spa tub **(see drawing 9)**. Hand-tighten the connectors securely. Do not use tools to tighten.

   CAUTION: Do not sit, lean, cover or place any objects over the spa control unit.

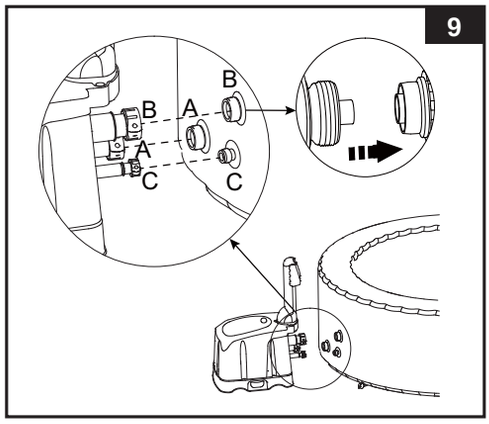

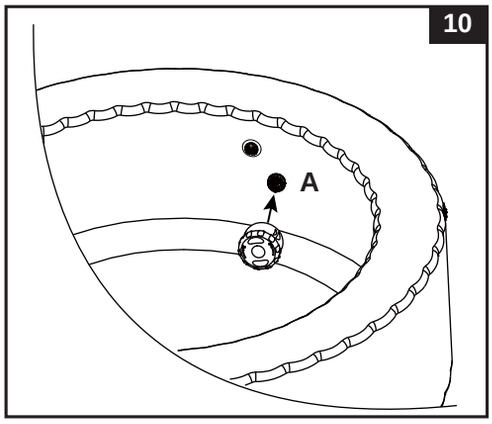

2. Attach the filter cartridge housing assembly to the inside of the spa tub outlet grid (marked "A") **(see drawing 10).** Inflate the spa tub first before installing filter pump fittings.
3. Before filling with water ensure the bottom drain valve caps are securely closed on the inside and outside.
4. Fill the spa tub with freshwater to a level between MIN and MAX marked on the inside of the spa wall. Do not over fill the spa. Never move the spa tub with water inside and/or with the control base attached to the spa as the spa or control base may be damaged.

   WARNING: Never pour water with a temperature higher than 40°C (104°F) into the spa directly. It is recommended to fill the spa tub with lukewarm water for quick heating and energy saving.
5. Place the spa cover and spa air bladder (pre-installed in spa cover) over the spa tub, and make sure the spa cover buckles are locked using the key provided after pulling the buckled straps tight.
   IMPORTANT: Inspect the spa cover regularly for leak, premature wear and tear or deterioration. Never use a damaged spa cover.
6. Ensure the spa is plugged into an electrical socket and press the button to turn on the control unit panel buttons first. Press the button on the control panel to activate the heater, see "Spa Control Unit Panel" operation section. The heating system is capable of increasing the water temperature by approximately 1.5-2.5ºC (3-4.5ºF) per hour.

IMPORTANT: The following conditions will lead to slow water heating.

- The ambient temperature is lower than 10ºC (50ºF).
- Outdoor wind speed is above 3.5-5.4m/s (8-12 mph).
- The jet function is activated when heating the spa water.
- The spa is not properly covered with the spa cover when the water is heating.

OPERATION

SPA CONTROL UNIT PANEL

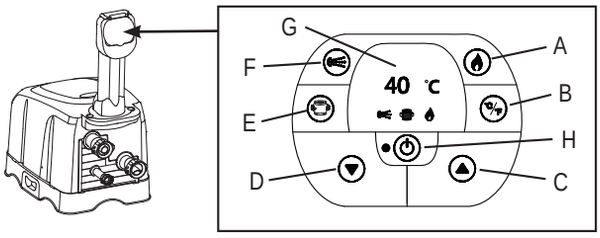

A: Heat Button
B: Celsius/Fahrenheit Toggle Button
C: Temperature Increase Button
D: Temperature Decrease Button
E: Water Filter Button
F: Water Jet Button
G: LED Display
H: On/Off Button

On/Off Button: Once the unit is plugged in, use this button to active the control unit panel buttons. The light next to the button is green when activated. Press this button to turn off all currently activated functions.
NOTE: The On/Off button may appear as a black button in the center of the control panel.

Heat Button: Use this button to activate the heating system. The pump will heat the spa water until the water temperature reaches the set temperature. When the spa water temperature drops 1-2°C (1.8-3.6°F) below the set temperature the heating system will restart. When the flame icon on the display is red, the heating system is activated. When the flame icon turns green, the water is at the set temperature. The heating system is at rest and the filtration system will continue working nonstop.
NOTE: To stop the filtration system while the heater is at rest mode, press the flame button first and then the filter button. Pressing the flame button only while the heater is at rest mode will turn off the heating system only and the filtration system will operate for another 24 hours before it turns off automatically.

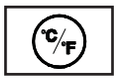

Celsius/Fahrenheit Toggle button:
The temperature can be displayed in either Fahrenheit or Celsius. The system's default is Celsius.

CAUTION: NEVER use the spa if indicated water temperature is more than 40°C (104ºF).

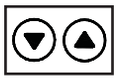

Temperature Adjustment Buttons: Pressing the Temperature Increase or Decrease buttons will cause the LED to flash. When flashing you can adjust to the desired temperature setting. If you hold these buttons down the values will rapidly increase or decrease. The new and desired temperature setting will remain on the LED display for 5 seconds to confirm the new value.
NOTE: The default temperature is 20°C (68°F).
NOTE: Temperature adjustment ranges from 20°C (68°F) to 40°C (104°F).

Water Filter Button:
This button turns the filter pump on and off. If the heating system is activated the filtration system will automatically start.
The water filter icon on the display is green when activated.

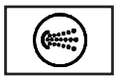

Water Jet Button: Use this button to activate the jet massage system. After 30 minutes of continues use, the jet massage system will automatically turn off. The water jet icon on the displays is green when activated. The angle of the water jet nozzles inside the spa tub wall can be adjusted manually.

WARNING: Do not run jet system when the cover is attached, air pressure may accumulate inside the spa and cause irreparable damage and bodily harm.

LED Display: Once plugged in the LED displays the current water temperature automatically.

NOTE: the built-in hard water treatment function works automatically in conjunction with the filtration system.

Jet Nozzle Adjustment

The amount of water and pressure coming out from the jet nozzles can be adjusted by turning the jet nozzle rim clockwise (maximum water output), counterclockwise (low water output) or anything in between. Closing one or 2 jet nozzles will divert more water pressure to the other jet nozzles.

LED CODE CHART

LED Reading	CAUSE	SOLUTION
E90	No water flow	• Turn off and unplug the control unit. • Ensure the outlet cover grid is clean and free from obstructions. • Clean or replace the cartridge, see Maintenance and Storage section. • Ensure the in/outlet connections on the spa tub and filter pump are not blocked. • Keep the spa water properly sanitized to ensure a clean and unclogged filter cartridge. • Press the button to turn off the unit. Release trapped air by unscrewing the drain valve cap on the control base side with a coin. Air has been release once a steady stream of water is flowing out from the drain valve. Wait for 15 seconds and screw the drain valve cap back. Press the button to activate the control panel buttons, and then run the filter function by pressing the button to push out any remaining air in the system. • If problem persists, contact Intex Service Center.
E94	Water temperature too low	• If the ambient temperature is below 4°C (39°F), we recommend not to use the spa. • Turn off and unplug the control unit, add some warm water to raise the spa water temperature above 5°C (41°F), then press the button to heat up the water to the desired temperature. • If problem persists, contact Intex Service Center.
E95	Water temperature is around 50°C (122°F)	• Turn off and unplug the control unit. When the water has cooled down, plug the RCD and restart all over again. • Turn the heater off, then press the filter and jet buttons to lower the water temperature. • If problem persists, contact Intex Service Center.
E96	System Error	• Turn off and unplug the control unit, use the cap to stop the water from flowing out of the tub, disassemble and drain out the control unit. Reassemble the control unit back to the tub. Plug the RCD and restart all over again. • If problem persists, contact Intex Service Center.
E97	Dry-fire Protection	• Contact Intex Service Center.
E99	Water temperature sensor broken	• Contact Intex Service Center.
END	After 72 hours of operation, the pump will hibernate and the rapid heating and water filtration functions are disabled.	• Press the button to re-active the filter pump.

MAINTENANCE AND CHEMICALS

⚠ WARNING

Always unplug this product from the electrical outlet before removing, cleaning, servicing or making any adjustment to the product.

Water Sanitation

The spa owner must regularly check and keep the spa water sanitized with scheduled maintenance (daily, if necessary). Adding sanitizer and other chemical will control bacteria and viruses present in the spa water.
The maintenance of a proper water balance through appropriate use of sanitizers is the single most important factor in maximizing the life and appearance of the spa tub as well as ensuring clean, healthy and safe water. Proper technique is important for water testing and treating the spa water. See your pool/spa professional for chemical, sanitizer, test kits and testing procedures questions.

CATUTION: ALWAYS FOLLOW THE CHEMICAL MANUFACTURER'S DIRECTIONS, AND THE HEALTH AND HAZARD WARNINGS.

Do not add chemicals if the spa is occupied. This can cause skin or eye irritation. Concentrated chlorine solutions can damage the spa tub. In no event is Intex Recreation Corp., Intex Development Co. Ltd., their related companies, authorized agents and service centers, retailers or employees liable to the buyer or any other party for costs associated with the loss of spa water, chemicals or water damage.

Maintenance of Spa Water and Cartridge

Protect all the spa occupants from possible water-related illnesses by keeping the spa water clean and sanitized. Always practice good hygiene. To ensure proper spa water quality follow these procedures:

1. Inspect and clean the filter cartridge every day, and change the filter cartridge every 3 days.
   a. Unscrew the cartridge housing assembly from the spa tub wall and remove the cartridge **(see drawing 11).**
   b. Use a garden hose to rinse off the cartridge. If the cartridge remains soiled and discolored it should be replaced. Keep spare cartridges on hand.
   c. Reinstall the clean cartridge back into the cartridge housing and replace the cartridge housing assembly back onto the spa tub wall.
2. Change the spa water every 3 days. See "Spa Tub Drainage" and "Spa Tub Cleaning" sections for details.
3. Use spa chemicals to maintain proper water chemistry. Spa damage resulting from misuse of chemicals and mismanagement of spa water is not covered by the warranty.
4. All occupants must shower before entering the spa.

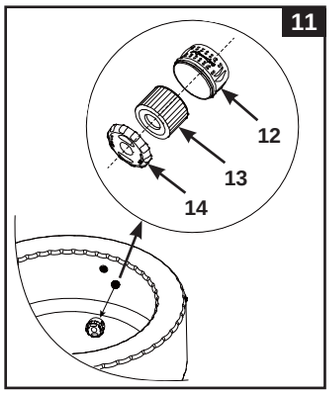

Water Chemistry Balance

Maintain the spa water pH level between 7.2 and 7.8, total alkalinity level between 80 and 120ppm and free chlorine level between 2 to 4ppm. Use the included test strips to test the spa water chemistry before each use of the spa and continue to test the water no less than once a week.
The Test Strips can test the "Free Chlorine", "pH", "Total Alkalinity" and "Calcium Hardness" levels at the same time:

1. Dip the entire strip into the water and remove immediately.
2. Hold the strip level for 15 seconds. Do not shake excess water from the strip.
3. Compare the strip pad to the color chart on the packaging label. If necessary, adjust the chemical level in the pool water.

NOTE: Check the expiry date of the test kit as the test results may be inaccurate if the kit is used after that date. Low pH will damage the spa tub and pump. Damage resulting from chemical imbalance is not covered by the warranty.
Use the included chemical floater dispenser to administer chlorine [chemical tablet size: less than 1" (2.5cm) diameter] into the spa water. Add 1 tablet into the dispenser. Always follow the chemical manufacturer's directions. Remove the chemical floater dispenser when the spa is in use.
Never let chlorine come in contact with the spa tub if it is not completely dissolved.

IMPORTANT: Press the button on the spa control panel to activate the jet system and help dissolve the chemicals into the water.
Never mix chemicals together. Add the chemicals to the spa water separately. Thoroughly dissolve each chemical before adding another one to the water.

SPA WATER CHEMISTRY AND BALANCE

Preferred Water Chemistry Reading			
	Minimum	**Ideal**	**Maximum**
Free Chlorine	2 ppm	2 - 4 ppm	5 ppm
pH	7.2	7.2 - 7.6	7.8
Total Alkalinity (TA)	60 ppm	80 ppm	120 ppm
Calcium Hardness ($CaCO_3$)	100 ppm	150–250 ppm	350 ppm
Saturation Index (SI)	–0.3	0	+0.3
Water Temperature	20ºC / 68 ºF	20–40ºC / 68–104ºF	40ºC / 104ºF

Free chlorine: is the chlorine residual present in the spa water.
Result if too low – Inadequate level of disinfection.
Result if too high – cause odor problem, skin & eye irritation, corroded metals and other materials.

pH: a value that indicates how acidic or basic the spa water is.
Result if too low – Corroded metals, eye & skin irritation, and destruction of total alkalinity.
Result if too high – Scale formation, cloudy water, shorter filter/heater runs, eye & skin irritation, poor chlorine efficiency.

Total Alkalinity (TA): indicates the degree of the water's resistance to pH change. It determines the speed and ease of pH change, so always adjust total alkalinity before adjusting the pH level.
Result if too low – Corroded metals, eye & skin irritation. Low alkalinity will cause the pH to be unstable.
Result if too high – Scale formation, cloudy water, shorter filter/heater runs, eye & skin irritation, high chlorine demand.

Calcium Hardness ($CaCO_3$): refers to the amount of calcium and magnesium dissolved in the water.
Result if too low – Difficulty balancing water, corrosion of metal components, eye & skin irritation and water foaming.
Result if too high – Scale formation, cloudy water, eye & skin irritation, difficulty balancing water and filter/heater inefficiency.

Saturation Index (SI): temperature, calcium hardness concentration, total alkalinity and pH represent the main factors influencing scale formation. The tendency of water to either form scale or corrode is indicated by the Saturation Index (SI):

$$SI = pH+TF+CF+AF-12.1$$

*Where: TF = Temperature Factor; CF = Calcium Hardness Factor; AF = Total Alkalinity Factor

Water Temperature		TF	Calcium Hardness (ppm)	CF	Total Alkalinity (ppm)	AF
(ºC)	(ºF)					
8	46	0.2	75	1.5	50	1.7
12	54	0.3	100	1.6	75	1.9
16	61	0.4	150	1.8	100	2.0
19	66	0.5	200	1.9	150	2.2
24	75	0.6	250	2.0	200	2.3
29	84	0.7	300	2.1	300	2.5
34	93	0.8	400	2.2	400	2.6
40	104	0.9	500	2.3	--	--
--	--	--	1000	2.6	--	--

Test the water pH, Temperature, Calcium Hardness and Total Alkalinity levels. Use the equivalent Factors in the SI equation.
SI = 0, Balance
If SI > 0, Scaling or cloudy water condition.
If SI < 0, Corrosive to metals or eye & skin irritating condition.
The SI is considered satisfactory if the value is within -0.3 to +0.3 range. Zero being perfect.

SPA WATER CHEMISTRY AND BALANCE (continued)

SPA Water Adjustment

How to adjust the spa water chemistry when the levels are off the range. **CAUTION:** Always follow the chemical manufacturer's directions, and the health and hazard warnings.

Total Alkalinity (TA) Adjustment

Remove the spa cover to aerate the water and use the included test strips to check the chemistry level.
Ensure the chlorine level in the water is between 2-4 ppm first, as chlorine will affect the TA test result.
If the TA level (and not the pH) is higher than 120 ppm, to lower the TA level, you add muriatic acid (hydrochloric acid) or sodium bisulfate.
If the TA level is lower than 60 ppm, you add sodium bicarbonate.
For example, if the TA level is 180 ppm, the desired decrease is 60 ppm, from below chart, you need to add 0.269 Lb (121 g) of sodium bisulfate or 0.101 qt (96 ml) of muriatic acid.

If the test strip color is between 180 ppm and 240 ppm, and close to 180 ppm, you can also add 0.269 Lb (121 g) of sodium bisulfate or 0.101 qt (96 ml) of muriatic acid.

If the reading is more than 240 ppm, you can add sodium bisulfate or muriatic acid to the water drop by drop until the test strip indicates a 240 ppm reading, then add 0.528 Lb (238 g) of sodium bisulfate or 0.202 qt (192 ml) of muriatic acid.

NOTE: After adjustment, retest the water after 24 hours and adjust again if necessary.

Lowering Total Alkalinity

Amount of Sodium Bisulfate to lower Total Alkalinity

Desired level	60 ppm	80 ppm	100 ppm	120 ppm	140 ppm
Volume: 210 gal / 800 L	0.269 Lb	0.358 Lb	0.448 Lb	0.528 Lb	0.627 Lb
	121 g	161 g	202 g	238 g	283 g

Amount of Muriatic Acid to lower Total Alkalinity

Desired level	60 ppm	80 ppm	100 ppm	120 ppm	140 ppm
Volume: 210 gal / 800 L	0.101 qt	0.135 qt	0.169 qt	0.202 qt	0.234 qt
	96 mL	128 mL	160 mL	192 mL	223 mL

(Muriatic acid: 31.45%)

Raising Total Alkalinity

Amount of Sodium Bicarbonate to raise Total Alkalinity

Desired level	20 ppm	40 ppm	60 ppm	80 ppm
Volume: 210 gal / 800 L	0.059 Lb	0.118 Lb	0.178 Lb	0.237 Lb
	27 g	53 g	80 g	107 g

pH Adjustment

After the total alkalinity has been lowered to 120 ppm or raised to 80ppm and the pH is still high or low, you can adjust it using the following chart.

SPA WATER CHEMISTRY AND BALANCE (continued)

Lowering pH

Lowering pH Using Muriatic Acid

Volume	Total Alkalinity	From→To	
		8.4→7.2	7.8→7.2
210 gal (800 L)	120 ppm	0.028 qt	0.019 qt
		26 mL	18 mL
	80 ppm	0.018 qt	0.013 qt
		18 mL	12 mL

Lowering pH Using Sodium Bisulfate

Volume	Total Alkalinity	From→To	
		8.4→7.2	7.8→7.2
210 gal (800 L)	120 ppm	0.071 Lb	0.047 Lb
		32 g	21 g
	80 ppm	0.047 Lb	0.032 Lb
		21 g	14 g

Raising pH

Raising pH Using Sodium Bicarbonate

Volume	Total Alkalinity	From→To
		6.8→7.2
210 gal (800 L)	120 ppm	0.541 Lb
		243 g
	80 ppm	0.361 Lb
		163 g

Calcium Hardness Adjustment

Use the included test strips to check the water hardness level and adjust it following below chart.

Lowering Calcium Hardness

If your household water supply is treated with a softener, mix the spa hard water with the soft water according to the water volume ratio chart to lower the calcium hardness:

Lowering Calcium Hardness Using Soft Water

Initial level	1000 ppm	500 ppm	350 ppm	250 ppm
Desired level: 100 ppm	Water Volume Ratio **(Vhard water:Vsoft water)**			
	1:9	1:4	2:5	2:3

Raising Calcium Hardness

If the calcium hardness level in the spa water is lower than 100 ppm, add 89 g or 0.197 Lb of calcium chloride into the spa water.

⚠ WARNING

Muriatic acid is a caustic chemical and liquid solution of sodium bisulfate ($NaHSO_4$) is highly acidic. Handle all chemicals with care and wear extra personnel protective equipment including goggle and gloves. It is very important not to splash acid onto your skin or clothing, or into your eyes.

MAINTENANCE

Spa Tub Drainage

1. Turn off and unplug the spa control unit.
2. Connect the drain valve adaptor to a garden hose and point the other end of the garden hose to a suitable draining area **(see drawing 12).**
3. Remove the drain valve cap from outside of the spa tub and attach the drain valve adaptor to the drain valve **(see drawing 12).**
4. From inside of the spa tub, open the drain valve cap, water will start flowing out from the garden hose.
5. When the water stops draining, disconnect the spa control unit from the spa tub wall. Lift the spa tub wall from the side opposite the drain, leading any remaining water to the drain and emptying the spa completely **(see drawing 13).**
6. Turn over the spa tub to empty any remaining water **(see drawing 14).**
7. Unscrew the drain valve on the spa control unit side using a coin to drain out any water **(see drawing 15).**
8. Use a clean towel to wipe up any remaining water and moisture on the spa tub and spa control unit.
9. Ensure the spa tub and spa control unit are thoroughly dried.
   NOTE: The enclosed plugs **(15 & 23)** can be used to cover the water inlet and outlet connectors from the inside of the spa tub to prevent water from flowing out.

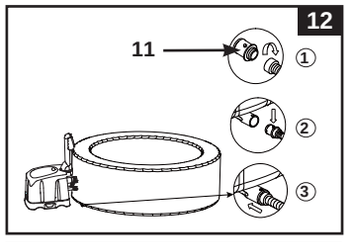

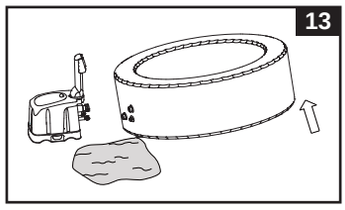

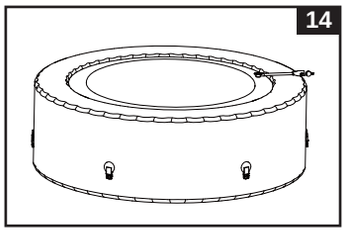

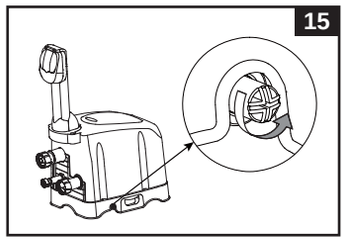

Spa Tub Cleaning

If dirt is visible in the water or water becomes cloudy and proper water chemistry does not clear it up, change the water and clean the spa tub.
See "Spa Tub Drainage" section on how to drain the spa.
While empty, remove the cartridge housing from inside of the spa tub wall, clean and/or replace the filter cartridge. Use a sponge and mild soap solution to wipe away any soil or stains on the inside of the spa wall. Rinse thoroughly before refilling with clean water.
IMPORTANT: Do not use steel wool, hard brushes or abrasive cleaners.

Spa Tub Air Valve Fastening

Check the spa tub air valve for leakage and tightness before use. If air is leaking from the air valve, use the provided wrench **(22)** to tighten the air valve as follow:

1. Make sure the spa tub is deflated, open the air valve cap and insert the wrench **(22)** into the air valve body **(see drawing 16).**
2. With one hand, hold the backside of the air valve base from the inside of the spa tub wall and turn the wrench **(22)** clockwise.
   IMPORTANT: Never adjust the air valve base when the spa is in use or filled with water. Only use the air valve wrench if the air valve is loose or there is leakage around air valve base. Do not over tighten the air valve: over tightening can damage the valve. Just ensure the air valve is snug and not leaking.

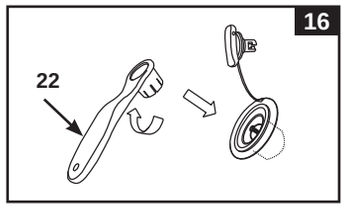

Spa Cover

The attachment buckles of the cover are locking buckles. Two keys are provided in the plastic bag with the manual and other accessories. Each buckle is marked with "locked" and "unlocked" symbols for easy operation: put the key into the slot on the buckle and turn it to the appropriate position to lock or unlock the buckle respectively.
To assure safety from unauthorized access, always put the cover on when spa is not in use and lock all buckles. Always keep the keys out of reach of children. In case you misplace the keys, you can use any similar size flat screwdriver to lock or unlock the buckles.
Inspect the spa cover regularly for leaks, premature wear and tear, damage, or signs of deterioration. Never use a worn or damaged cover: it will not provide the level of protection required to prevent unsupervised access to the spa by a child.

MAINTENANCE (continued)

Spa Tub and Cover Air Bladder Repair

Use the enclosed repair patch to repair any puncture:

- Clean and dry the area to be repaired thoroughly.
- Remove the patch backing paper and press patch firmly over the puncture. Smooth out the surface to remove any air bubbles under the patch.

⚠ IMPORTANT

The ambient temperatures of air have an effect on the spa tub internal pressure. Air inside of the spa tub may expand and contract with varying temperature leading to reduce pressure inside of the spa tub. If this occurs, simply use the provided pressure gauge to check the internal air pressure and add more air if necessary.

STORAGE

1. Drain and clean the spa following the "Spa Tub Drainage" and "Spa Tub Cleaning" sections.
2. Reverse set up instructions to deflate and disassemble the spa tub, spa control unit and spa cover air bladder.
3. Spa Tub deflation with the Electric Air Pump **(see drawing 17)**.
   a) Attach the inflation pump adaptor **(29)** to the deflation port.
   b) Connect the inflation hose **(7)** to the inflation pump adaptor.
   c) Insert the other end of the inflation hose **(7)** into the valve and turn to the right to lock it in position. Switch on the electric air pump to deflate.
4. Make sure all the spa components and accessories are thoroughly clean and dry before storage. Air-dry the spa tub in the sun for an hour before folding.
5. Fold the spa tub loosely and avoid any sharp corners to prevent damage or leakage to the spa tub liner.
6. Prepare additional new cartridges for next time use.
7. Store the spa tub and accessories in a dry, temperature controlled, between 0º – 40ºC (32º – 104 ºF), storage location.
8. The original packing can be used for storage.

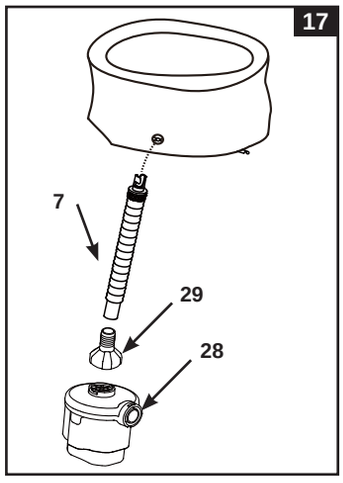

TROUBLESHOOTING

PROBLEM	CAUSE	SOLUTION
NO DISPLAY/SPA CONTROL UNIT DOES NOT WORK	• Spa is unplugged or off. • Control panel cable plug loose. • Power failure. • RCD tripped. • RCD broken.	• Ensure the spa is plugged and switched on. • Ensure the control panel cable plug is firmly attached to the control base receptacle. • Check power source. • Reset the RCD. • Contact Intex Service Center.
HOUSEHOLD CIRCUIT BREAKER TRIPPED	• Circuit breaker under rated. • Overloaded circuit breaker. • An electrical fault in the line.	• Ensure correct circuit breaker rating. • Provide a dedicated circuit breaker feeding the spa electrical outlet only. • Contact a qualify electrician to correct the electrical fault.
NOT HEATING PROPERLY	• Temperature set too low. • Dirty filter cartridge. • Water temperature decreasing during heater STANDBY mode. • Heating element failed.	• Increase the temperature and attach the spa cover. • Clean or replace the filter cartridge in time. • If heater is in STANDBY mode, press the flame button twice to heat up the water to the set temperature. • Contact Intex Service Center.
JET FUNCTION DOES NOT WORK	• Jet pump is too hot.	• Turn off and unplug the spa. Let it cool down and restart all over again. • If problem persists contact Intex Service Center.
JET OUTPUT IS WEAK	• Low water level. • Obstruction in the suction inlet inside the tub. • Jet nozzles clogged or dirty. • Jet nozzles plumbing pipes damaged.	• Add water between MIN and MAX level. • Ensure suction inlet is not covered or blocked. • Clean any dirt inside the jet nozzles. • Contact Intex Service Center.
JET AIR CONTROL KNOB NOT WORKING	• Jet nozzles clogged or dirty. • Control panel jet airflow hose loose or damaged. • Jet airflow plumbing inside the spa tub damaged.	• Clean any dirt inside the jet nozzles. • Ensure the jet air hose in the control panel is not damaged and securely attached. Replace if needed. • Contact Intex Service Center.
FILTRATION PUMP NOT WORKING	• Dirty filter cartridge. • Filtration inlet and/or outlet clogged. • Filter pump motor failed.	• Clean or replace the filter cartridge in time. • Check and clean filtration inlet and outlet regularly. • Contact Intex Service Center.
WATER NOT CLEAN	• Cartridge assembly not properly attached. • Insufficient filtering time. • Dirty filter cartridge. • Improper water maintenance. • Filtration inlet and outlet clogged.	• Ensure the cartridge assembly is properly attached. • Increase filtration time. • Clean or replace the filter cartridge in time. • Keep the spa water properly sanitized. Refer to the chemical manufacturer's instructions. • Check and clean filtration inlet and outlet regularly.
PUMP CONNECTORS ARE NOT LEVEL WITH THE SPA CONNECTORS	• One characteristic of PVC is that it changes shape, which is normal.	• Elevate the pump with wood or another type of insulated material to bring the pump's connectors level with the spa's connectors.
TUB HAS A STRANGE SHAPE	• Expanded internal air pressure by strong sunshine.	• Do not expose the product under direct sunshine. • Check the air pressure and release air if necessary. During very hot weather, you must check to see whether it is necessary to release some air. This is to avoid any possible damage to the tub.
TUB LOSES AIR PRESSURE	• Air valve cap loose. • Air valve base loose. • Hole, cut or split on spa tub.	• Ensure air valve cap is securely closed. • Fill up the spa tub with air then make sure the air valve base is tighten, see "Spa Tub Air Valve Fastening" section. • Put liquid soap and water in a squirt bottle and spray on seams. If there is a leak it will bubble. After you find the leak, clean and dry the leaking area, then apply the repair patch that comes with your spa.
LEAKING BETWEEN SPA TUB CONNECTORS AND CONTROL UNIT CONNECTORS	• Spa control base inlet/outlet connections not securely tight. • Spa control base inlet/outlet o-ring missing/dirty.	• Tighten inlet and outlet connections. • Coat the o-ring with petroleum jelly for water proof.
SPA IS TOO NOISY IN FILTRATION MODE ONLY	• Control base components not securely attached. • Control base ground not level and firm. • Spa filter motor failed.	• Ensure control panel, back cover and all inlet/outlet are securely connected. • Ensure ground is level, firm and smooth. • Replace the failed filter motor with a new one.

WARRANTY

Your PureSpa has been manufactured using the highest quality materials and workmanship. All Intex products have been inspected and found free of defects prior to leaving the factory. This Limited Warranty applies only to the PureSpa listed below.
The following provision is only valid within the European member states countries: The legal regulation of Directive 1999/44/EC will not be effected by this Intex warranty.

The provisions of this Limited Warranty apply only to the original purchaser and is not transferable. This Limited Warranty is valid for the period noted below from the date of the initial retail purchase. Keep your original sales receipt with this manual, as proof of purchase will be required and must accompany warranty claims or the Limited Warranty is invalid.

PureSpa Warranty – 1 Year

If a manufacturing defect is found within the periods noted above, please contact the appropriate Intex Service Center listed in the separate "Authorized Service Centers" sheet. The Service Center will determine the validity of the claim.

IMPLIED WARRANTIES ARE LIMITED TO THE TERMS OF THIS WARRANTY AND IN NO EVENT SHALL INTEX, THEIR AUTHORIZED AGENTS OR EMPLOYEES BE LIABLE TO THE BUYER OR ANY OTHER PARTY FOR DIRECT OR CONSEQUENTIAL DAMAGES OR LIABILITIES.

This Limited Warranty does not apply if the products are subject to negligence, abnormal use or operation, accident, improper operation, improper voltage or current contrary to operating instructions, or to damage by circumstances beyond Intex's control, including but not limited to, ordinary wear and tear and damage caused by exposure to fire, flood, freezing, rain, or other external environmental forces. This Limited Warranty applies only to those parts and components sold by Intex. The Limited Warranty does not cover unauthorized alterations, repairs or disassembly by anyone other than Intex Service Center personnel.

The costs associated with the loss of pool water, chemicals or water damage are not covered by this warranty. Injury or damage to any property or person is not covered by this warranty.