Use & care guide
Guia de uso y cuidado
Guide d'utilisation et d'entretien

30" and 36" Range Hood

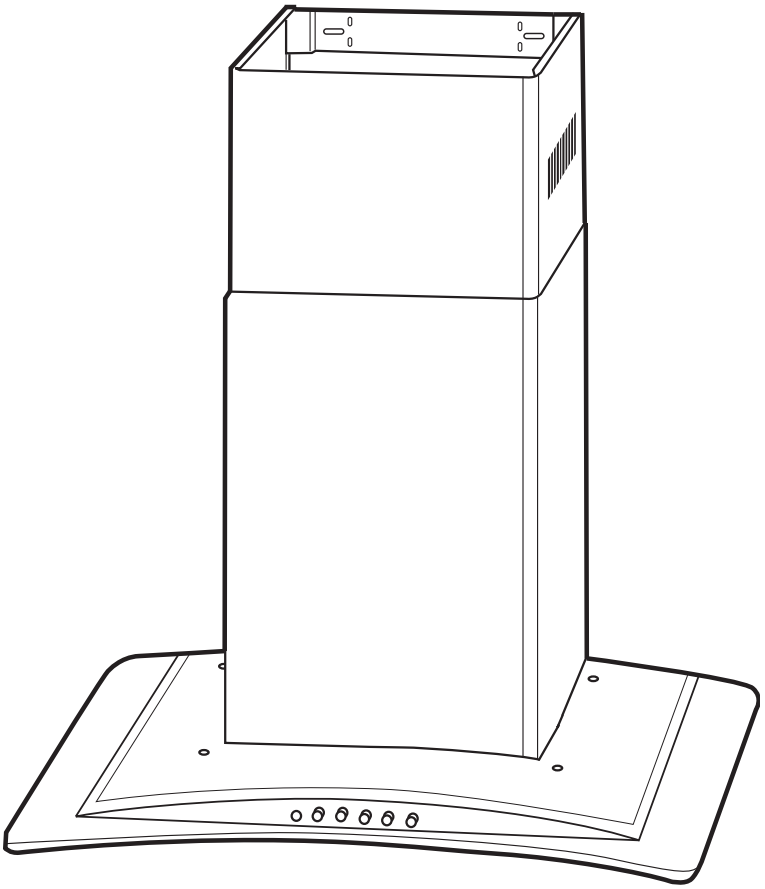

FHWC3060LSA + FHWC3660LSA

316902443 Rev A February 2012

Finding information

Table of contents

Please read and save this guide 02

Keep a record for quick reference 02

Important safety instructions 02-04

Electrical requirements 04

Intended use 05

Parts supplied 05

Installing the hood.....06-10

Operation..... 11

Cleaning and maintenance.....11-12

Technical data..... 12

Troubleshooting 12

Environmental protection..... 12

Warranty information 13

Please read and save this guide

Thank you for choosing **Frigidaire**, the new premium brand in home appliances. This Use & Care Guide is part of our commitment to customer satisfaction and product quality throughout the service life of your new appliance.

We view your purchase as the beginning of a relationship. To ensure our ability to continue serving you, please use this page to record important product information.

Keep a record for quick reference

Purchase date

_____

Model number

_____

Serial number

_____

NOTE

Registering your product with Frigidaire enhances our ability to serve you. You can register online at **www.frigidaire.com** or by dropping your Product Registration Card in the mail.

Questions?

For toll-free telephone support in the U.S.: **1-800-944-9044** or Canada: **1-800-265-8352**

For online support and Internet production information visit **http://www.frigidaire.com**

Important safety instructions

Do not attempt to install or operate this appliance until you have read the safety instructions in this manual. Safety items throughout this manual are labelled with a **Danger**, **Warning**, or **Caution** based on the risk type.

Definitions

⚠ This is the safety alert symbol. It is used to alert you to potential personal injury hazards. Obey all safety messages that follow this symbol to avoid possible injury or death.

⚠ DANGER

DANGER indicates an imminently hazardous situation which, if not avoided, will result in death or serious injury.

⚠ WARNING

WARNING indicates a potentially hazardous situation which, if not avoided, could result in death or serious injury.

⚠ CAUTION

CAUTION indicates a potentially hazardous situation which, if not avoided, could result in minor or moderate injury.

Important safety instructions

IMPORTANT

Indicates installation, operation, or maintenance information which is important but not hazard-related.

Child safety

Packing materials:

- Packing cartons covered with rugs, bedspreads, plastic sheets, or stretch wrap may become airtight chambers and can quickly cause suffocation.
- Remove the protective film covering the appliance before putting it into operation.

- Destroy or recycle the appliance's carton, plastic bags, and any other exterior wrapping material immediately after the product is unpacked. Children should never play with these items. **Danger of suffocation!**

IMPORTANT

PLEASE READ THESE INSTRUCTIONS CAREFULLY BEFORE INSTALLATION AND USE.

INSTALLATION MUST COMPLY WITH ALL LOCAL CODES.

IMPORTANT: Save these instructions for the Local Electrical Inspector's use.

INSTALLER: Please leave these instructions with this appliance for the owner.

OWNER: Please retain these instructions for future reference.

DANGER

Always switch off the electricity supply at the mains during installation and maintenance such as for light bulb replacement.

WARNING

To reduce the risk of fire, electric shock, or injury to persons, observe the following:

- **FOR RESIDENTIAL USE ONLY.**
- **Use this appliance only in the manner intended by the manufacturer. If you have questions, contact the manufacturer.**
- **Installation work and electrical wiring must be done by qualified person(s) in accordance with a ll applicable codes & standards, including fire-rated construction.**
- **Sufficient air is needed for proper combustion and exhausting of gases through the flue (chimney) of fuel burning equipment to prevent back-drafting. Follow the heating equipment manufacturers guideline and safety standards such as those published by the National Fire Protection Association (NFPA), the American Society for Heating, Refrigeration and Air Conditioning Engineers (ASHRAE), and the local code authorities.**
- **When cutting or drilling into wall or ceiling, do not damage electrical wiring and other hidden utilities (e.g. gas pipes).**
- **Ducted systems must always be vented to the outdoors.**

WARNING

- **Before servicing or cleaning the unit, switch power off at service panel and lock service panel disconnecting means to prevent power from being switched on accidentally. When the service disconnecting means cannot be locked, securely fasten a prominent warning device, such as a tag, to the service panel.**

CAUTION

For general ventilating use only. DO NOT use to exhaust hazardous or explosive materials or vapors.

CAUTION

To reduce risk of fire and to properly exhaust air, be sure to duct air outside – do not vent exhaust air into spaces within walls, ceilings, attics, crawl spaces, or garages.

Important safety instructions

Important safety instructions

WARNING

To reduce the risk of fire, use only metal duct work. Install this hood in accordance with all requirements specified.

WARNING

To reduce the risk of fire or electric shock, do not use this hood with any external solid state speed control device.

WARNING

To reduce the risk of a cooker top grease fire:

- **Never leave surface units unattended at high settings. Boilovers cause smoking and greasy spillovers that may ignite. Heat oils slowly on low or medium settings.**
- **Always turn hood ON when cooking at high heat or when flambéing food (i.e. Crepes Suzette, Cherries Jubilee, Peppercorn Beef Flambé).**

WARNING

- **Clean ventilating fans frequently. Grease should not be allowed to accumulate on fan or filter.**
- **Do not use the range hood without the grease filters, or if the filters are excessively greasy.**
- **Use proper pan size. Always use cookware appropriate for the size of the surface element.**

WARNING

NEVER PICK UP A FLAMING PAN - you may be burned.

WARNING

To reduce the risk of injury to persons, in the event of a cooker top grease fire, observe the following:

- **Smother flames with a close-fitting lid, cookie sheet, or other metal tray, then turn off the gas burner or the electric element. Be careful to prevent burns. If the flames do not go out immediately, evacuate and call the fire department.**
- **Never pick up a flaming pan – you may be burned.**
- **Do not use water, including wet dishcloths or towels – a violent steam explosion will result.**
- **Use an extinguisher only if:**
  - **You know you have a class ABC extinguisher, and you already know how to operate it.**
  - **The fire is small and contained in the area where it started.**
  - **The fire department is being called.**
  - **You can fight the fire with your back to an exit.**

CAUTION

Always leave safety grills and filters in place. Without these components, operating blowers could catch onto hair, fingers and loose clothing.

Electrical requirements

IMPORTANT

Observe all governing codes and ordinances.

It is the customer's responsibility:

- to contact a qualified electrical installer.
- to assure that the electrical installation is adequate and in conformance with National Electrical Code, ANSI/NFPA 70 – latest edition*, or CSA Standards C22.1-94, Canadian Electrical Code, Part 1 and C22.2 No.0-M91-latest edition** and all local codes and ordinances.

If codes permit and a separate ground wire is used, it is recommended that a qualified electrician determines that the ground path is adequate.

- Do not ground to a gas pipe.
- Check with a qualified electrician if you are not sure range hood is properly grounded.

- Do not have a fuse in the neutral or ground circuit.

IMPORTANT

Save installation instructions for electrical inspector's use.
The range hood must be connected with copper wire only.
The range hood should be connected directly to the fused disconnect (or circuit breaker) box through metal electrical conduit.

Wire sizes must conform to the requirements of the National Electrical Code ANSI/NFPA 70 – latest edition", or CSA Standards C22.1-94, Canadian Electrical Code Part 1 and C22.2 No.0-M91 – latest edition** and all local codes and ordinances.

A U.L.- or C.S.A.-listed conduit connector must be provided at each end of the power supply conduit (at the range hood and at the junction box).

Copies of the standards listed may be obtained from:
* National Fire Protection Association Batterymarch Park Quincy, Massachusetts 02269
** CSA International 8501 East Pleasant Valley Road Cleveland, Ohio 44131-5575

Power requirement:
120V~, 60Hz, 15 or 20A branch circuit

Intended use

- Your range hood is intended for exhaust operation only. This range hood is not recommended to be used over indoor grills. Do not use it to exhaust hazardous or explosive materials or vapors.

Parts supplied

No.	Part		Qty.
1		Range hood	1
2		Glass cover	1
3		Upper and lower chimney	1 + 1
4		Upper bracket	1
5		Lower bracket	1
6		Collar	1
7		Recirculation kit (optional accessories) -FHWRKT60LS	1
8		Bulb 20W, 120V~, GU10 (pre-assembled)	2
9		Bolt, rubber washer, washer	4 sets
10		Long screw (4mm x 32mm)	8
11		Wall plug	8
12		Short screw (4mm x 12mm)	4
13		Allen key	1
14		Wood screw (4mm x 50mm) Short screw (3.5mmx8mm)	4
15		Short screw (3.5mmx8mm)	2
16		10' extension chimney kit (optional accessories) FHW10X60LS	1
17	Template (stencilled)	Assembly template (stencilled)	1

Installing the hood

IMPORTANT

We recommend that two people carry out the installation. Pay attention to the procedure described in the assembly instructions.

Preparation

- Determine the exact location of the range hood.
- Plan the route for venting exhaust to the outdoors (fig. ③).
- Plan the power connection prior to installation so that electrical wiring will not be visible afterwards.
- **House wiring location:** The junction box is located on the top right side of the hood. Wiring should enter the back wall at least 20” above the bottom of the installation height, and within 3-3/8” to 4-3/4” of the right side of the centerline (fig. ①/②).

fig. ①

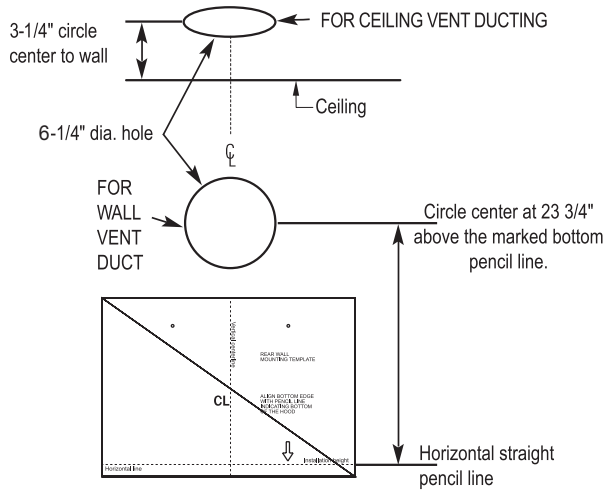

- Use the shortest and straightest duct route possible.
- The wall breakthrough must be carried out by a professional prior to installing the range hood. Pay attention to the length of the exhaust hose when planning the wall breakthrough. The exhaust hose must reach the outer edge of the wall without any kinks. **Important!** If the exhaust hose leads through an outer wall, install a wall cap with damper or roof cap at the exterior opening (not delivered). This can be installed by the professional that performs the wall breakthrough.
- If open fireplaces are operated in the same room, ask your local chimney sweeper about the local regulations prior to installation.
- If you are renting, then approval must be obtained from the owner of the property.
- **Attention!** In order for the range hood to reach optimal performance, install it over the middle of the cooking area.
- The following accessories are required to mount the range hood (not included):
  - → Exhaust duct
  - → Power drill with 3/16” and 1/8” bits
  - → Screwdriver
  - → Level
  - → Cable detector
  - → Measuring tape
  - → Duct tape

fig. ②

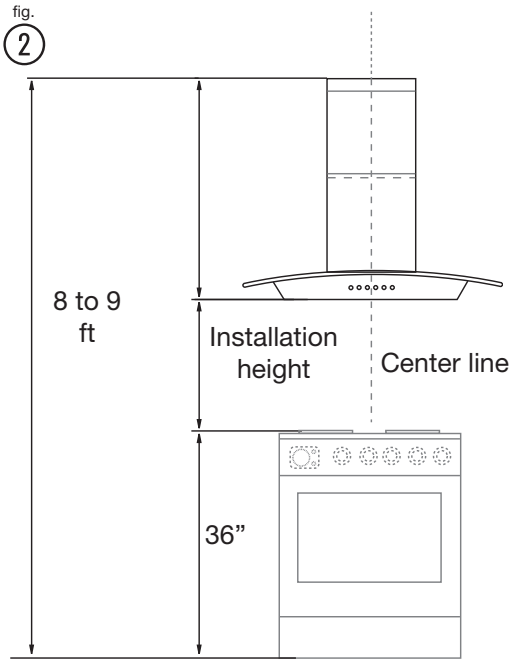

Ducting installation guidelines

- For safety reasons, ducting should vent directly outdoors (not into an attic, underneath the house, into the garage or into any enclosed space).
- Keep duct runs as short and straight as possible.
- Duct fittings (elbows and transitions) reduce air flow efficiency.
- Back to back elbow and “S” turns give very poor delivery and are not recommended.
- A short straight length of duct at the inlet of the remote blower gives the best delivery.
- Transition to duct from the integral blower or remote duct transition as close to the downdraft as is possible.
- Use a suitable 6” round duct.

- Flexible metal round ducts should only be used when no other duct fitting exists. Limit use to short lengths and do not crush when making corners.

Examples of possible ducting or air recirculation

fig. 3

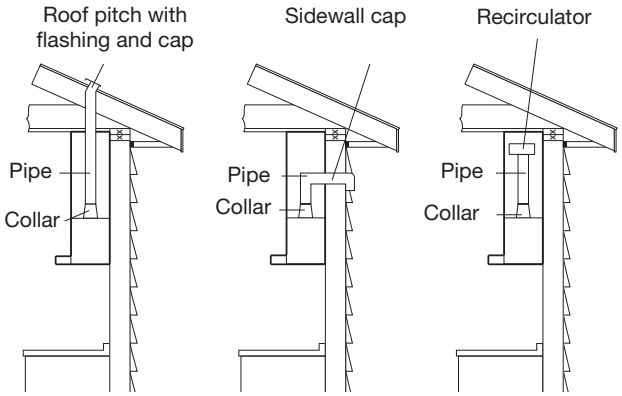

Installing range hood to the wall (Exhaust operation)

IMPORTANT

This range hood is very heavy. Adequate structure and support must be provided in all types of installations.

Install framing for hood support

- If drywall is present, mark the screw hole locations.
- Cut away enough drywall to expose 2 vertical studs at the holes location indicated by the template. Install two horizontal supports at least 1” x 6” between two wall studs at the bottom and top mounting holes installation location (fig. 4).
- The horizontal support must be flush with the room side of the studs. Use cleats behind both sides of the support to secure to wall studs.
- Reinstall drywall and refinish.

fig. 4

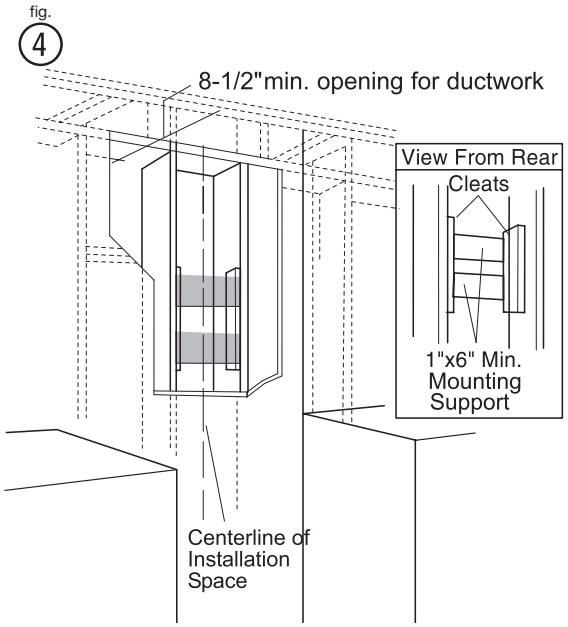

IMPORTANT

Framing must be capable of supporting 100 lbs.

Step 1:

- Make sure that no cables or pipes will become damaged (e.g. electric, gas, water; test the areas in question with a cable detector).
- Using supplied template (17), mark and drill 8 holes in the wall. Drill the holes according to the measured distances from the diagram (fig. 5).
- Upper/Lower bracket (4, 5): Insert 4 wall plugs (11) into the 4 drilled holes.
- Range hood (1): Installation is depending on wall type:

Wall type	Required fasteners
Wood	No wall plugs (11) required
Brick/Concrete	4 wall plugs (11)

Installing the hood

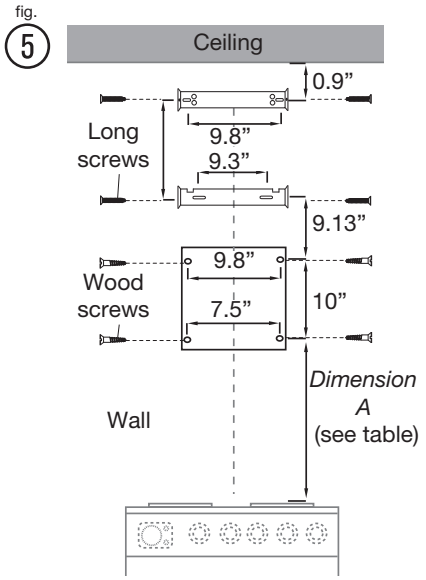

Desired range hood distance above a 36” high cook top

Ceiling height			
	8 Feet	9 Feet	10 Feet *1
	A*2	**A***2	**A***2
26”*3	28-3/32”		
27”*3	29-3/32”		
28”*3	30-3/32”		30-3/32”
29”*3	31-3/32”	31-3/32”	31-3/32”
30”*3	32-3/32”	32-3/32”	32-3/32”
31”*3	33-3/32”	33-3/32”	33-3/32”
32”*3	34-3/32”	34-3/32”	34-3/32”
33”		35-3/32”	35-3/32”
34”		36-3/32”	36-3/32”
35”		37-3/32”	37-3/32”

*1: with 10’ extension chimney kit FHW10X60LS (16) (not supplied). Please call Frigidaire at 1.800.944.9044 to order this kit.
*2: “*Dimension A*” in the chart represents the height from cook top to where the bottom screw mounting holes would be located.
*3: Recommended mounting height

Step 2:

- Install the range hood (1) either with wood screws or long screws, depending on the wall type:

Wall type	Required screws
Wood	4 wood screws (14)
Brick/Concrete	4 long screws (10)

- Insert 2 screws (10 or 14) in the top location, but do not fully insert the screws (fig. ⑧). Mount the range hood (1) to the wall and tighten the screws. Insert and tighten the 2 remaining screws on the bottom location of the range hood (fig. ⑥/⑦).
- Attach the collar (6) to the range hood (1). Secure with 2 short screws (12) (fig. ⑨).

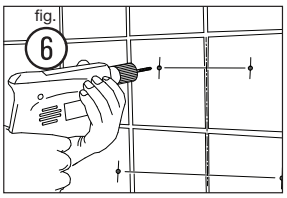

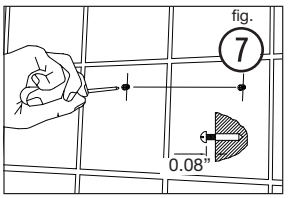

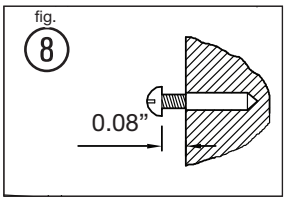

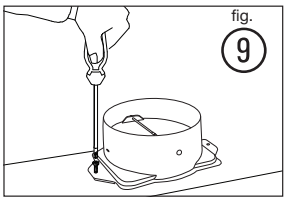

NOTE

Sometimes, sponge tape covers the holes. If the holes are located behind the sponge tape, simply insert the screw through the sponge tape.

Step 3:

- Mount the glass cover (2) onto the range hood (1). Use the allen key (13) to secure with 4 sets of bolts, rubber washers, and washers (9) (fig. ⑩).

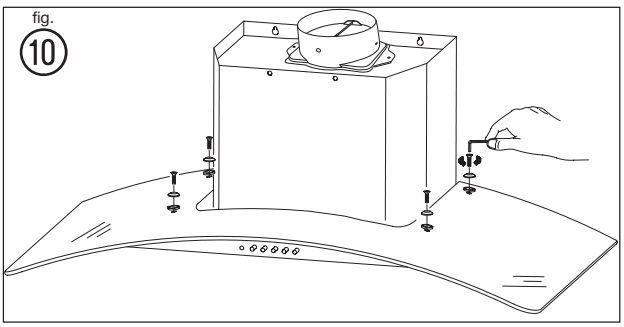

Step 4:

- Mount upper and lower brackets (4, 5) on the wall. Secure with the remaining 4 sets of long screws (10). The notches of the lower bracket should be facing up towards the ceiling (fig. ⑪).
- Attach the exhaust duct (fig. ⑫).

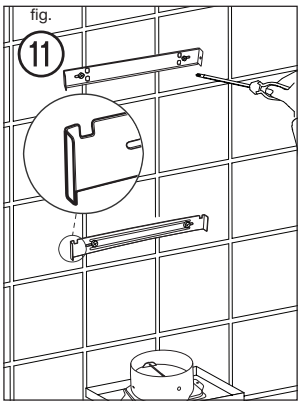

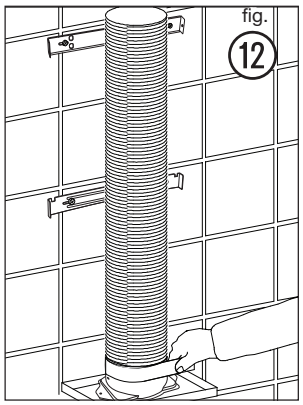

Electrical connections

DANGER

Danger of electric shock! All fittings must be installed by a competent person in accordance with current wiring regulations and local building regulations. If in doubt, consult a qualified electrician.

IMPORTANT

Always switch off the electricity supply at the mains during installation, cleaning and maintenance. We recommend that the fuse is withdrawn or circuit breaker switched off at the distribution board while work is in progress.

Step 5:

- Loosen the 2 short screws from the junction box (fig. ⑬).

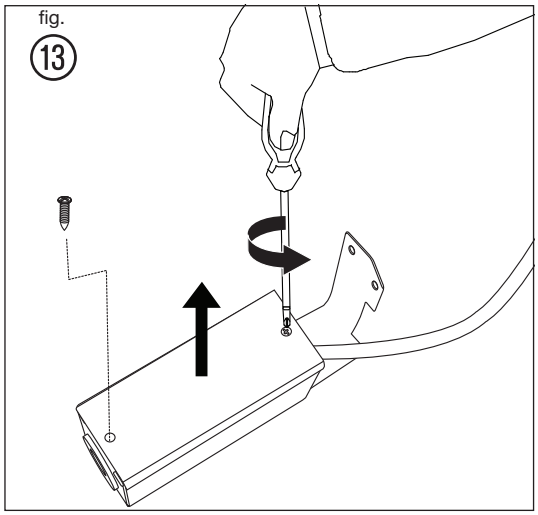

- Connect the incoming positive, neutral and ground cables to the respective terminals. The ground cable is already pre-assembled onto the junction box to provide grounding (fig. ⑭).

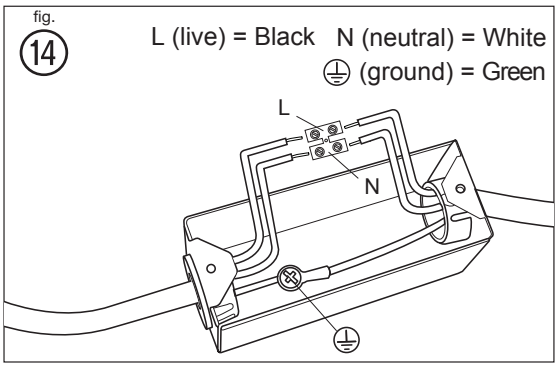

- Mount the junction box onto the range hood using 2 short screws (15) (fig. ⑮).

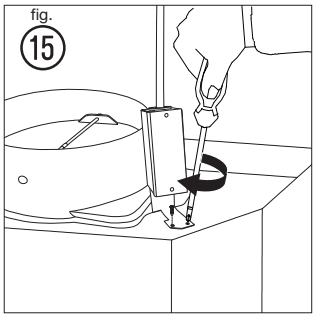

Step 6:

- Insert the upper chimney (3) into the lower chimney (3) from top to bottom (fig. ⑯).
- Mount upper and lower chimney (3) on the range hood (1). Fit the tab, which is bend by 90 degrees, into the lower bracket notch and mount to the lower bracket (5) (fig. ⑰/⑱).
- Pull the upper chimney (3) to the upward position to match the screw hole of the upper bracket. Mount to the upper bracket (4) with 2 side screws (12) (fig. ⑲).

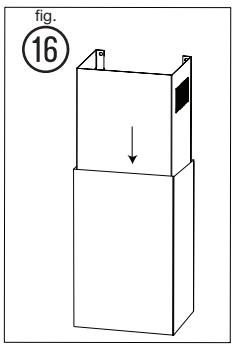

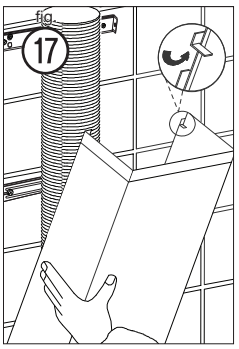

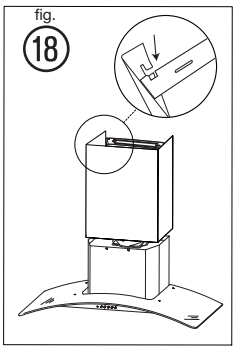

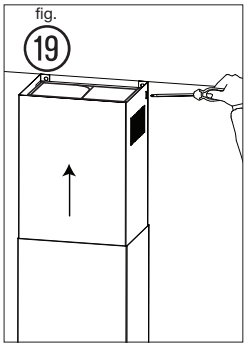

Installing the hood

CAUTION

Danger of injury. The chimney skirts may have some sharp edges.

Exhaust operation

- During exhaust operation, the range hood removes air from a room. If other fire sources that require the surrounding air for combustion are being operated in the same room, (e.g. gas, oil or coal heaters), the oxygen they require is taken away. Thus flames could be suffocated and gas could leak out or the fumes could be drawn back into the room.
- In order to guarantee a safe operation, there should be non-closable openings in doors, windows to ensure a fresh supply of combustion air. This will prevent the combustion fumes from being drawn back into the room.
- When assessing the measures necessary, always take the entire ventilation system of the house into consideration.
- Never secure the range hood to a ventilation duct, or a room or exhaust gas chimney! Do not let the air that is removed from the room be drawn into a duct where warm air is circulating. The extracted air should only be drawn outdoors through a separate ventilating duct that is only for the extractor hood.
- When in extraction mode, air in the room is being removed by the range hood. Please make sure that proper ventilation measures are being observed. The range hood removes odors from room but not steam.
- There shall be adequate ventilation of the room when the range hood is used at the same time as appliances burning gas or other fuels (not applicable to appliances that only discharge the air back into the room).
- The air must not be discharged into a flue that is used for exhausting fumes from appliances burning gas or other fuels (not applicable to appliances that only discharge the air back into the room).

Air recirculation operation

- **Recirculated air:** Kitchen fumes are removed and after purification are fed back into the room through the upper ventilation openings. The purification takes place via metallic anti-grease filter. No wall breakthrough is required for *recirculated air operation*.

Installing range hood to the wall in recirculation mode

- For the operation of the range hood with *recirculation mode* a recirculator, model no. FHWRKT60LS, needs to be obtained. Please call Frigidaire at 1.800.944.9044 to order this kit.
- Follow steps 1 to 4 from *Fixing range hood to the wall (with exhaust ducting)* chapter.

- To install the recirculator (7), use the template included in recirculation kit for proper position.
- Place the recirculator (7) against the upper bracket (4) by using the upper holes with upper bracket in the wall.
- Fix the recirculator (7) to the wall with 2 sets of long screws (10) and wall plugs (11) (fig. ⑳).
- Attach the exhaust duct on the bottom of the recirculator (7).
- Follow steps 5 to 6 from *Fixing range hood to the wall (with exhaust ducting)* sub-chapter.

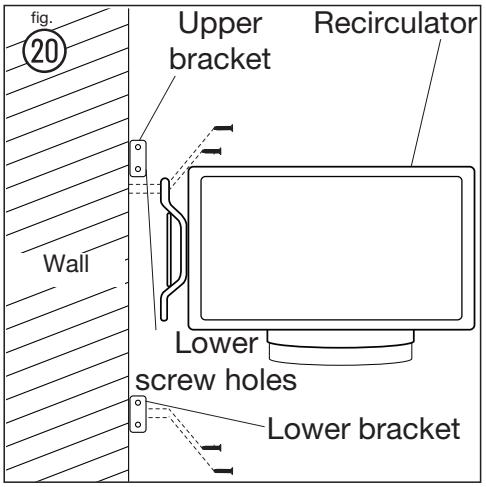

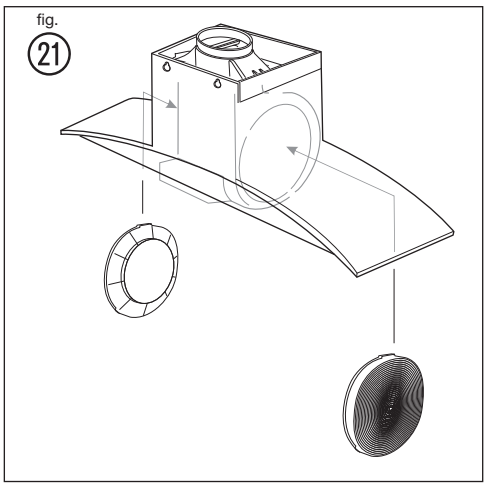

- Take out the grease filters and fit charcoal filters to two lateral sides of the motor blower. Assemble back the grease filters. (fig. ㉑).

Operation

- Press one of the speed **(• / • • / • • •)** buttons to turn the appliance on.

Button	Function
o	Press button **o** to switch the appliance off (pilot lamp is lit when appliance is switched on).
•	Press button • for low speed.
••	Press button •• for medium speed.
•••	Press button ••• for high speed.
☀	Press button ☀ to turn on lights. Press again to switch lights off.

For best performance

NOTE

Continuous use of range hood while cooking helps keep the kitchen comfortable and less humid.

It also reduces cooking odors and soiling moisture that create a frequent need for cleaning.

- Turn on the range hood before starting to cook.
- Clean the filters frequently (refer to **Cleaning and maintenance** below).
- Use low speed for normal use and higher speed for strong odors or fumes.

Cleaning and maintenance

Cleaning

DANGER

Always switch off the electricity supply at the mains during installation, cleaning and maintenance such as for light bulb replacement.

NOTE

The efficiency of the range hood depends on the cleanliness of the intake and filters. Grease should not be allowed to accumulate on hood or filter.

- Clean the appliance in the following intervals:

Regularly	Use a soft cloth moistened with hand-warm mildly soapy water or household cleaning detergent. Never use metal pads, chemical, abrasive material or stiff brush to clean the appliance.
Monthly	**Metallic anti-grease filter:** The filter collects grease, smoke and dust so the filter is directly affecting the efficiency of the range hood. If not cleaned, the grease residue (potential flammable) will saturate on the filter. Clean it with household cleaning detergent. The filter is dishwasher safe. **Recirculator:** clean the ventilation openings on the top sides.
every 4 - 6 months	**Charcoal filters:** • If the model is not vented to the outside, the air will be recirculated through disposable charcoal filters that help remove smoke and odors. • The charcoal filters cannot be cleaned, they must be replaced regularly (depending on range hood usage). • **NOTE**: Do not rinse or put charcoal filters in a dishwasher. • **NOTE**: Charcoal filters are not included with the range hood. Please call Frigidaire at 1.800.944.9044 to order this kit. When calling our customer service center, also have this range hood's model number ready.

IMPORTANT

Clean the filter every month to prevent risk of fire.

Maintenance

- User servicing – Do not repair or replace any part of the appliance unless specifically recommended in the manual. All other servicing should be referred to a qualified technician.

Light bulb replacement

- Switch the appliance off and disconnect the power supply.
- In order to replace the light bulb (8), the metallic anti-grease filter should be detached first.
- Pull the spring lock downward (fig. ㉓).
- Rotate and pull one or both of the light bulbs from the holders and replace with new light bulb(s) of the same type (GU10, 20W, 120V~) (fig. ㉔/㉕).
- Replace the metallic anti-grease filter and make sure it locks in place.

Troubleshooting

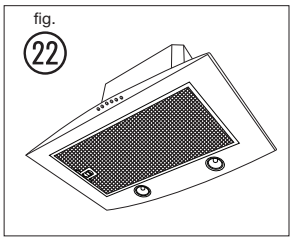

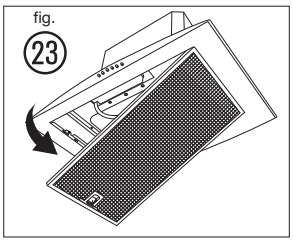

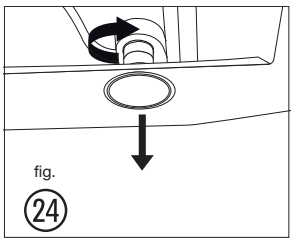

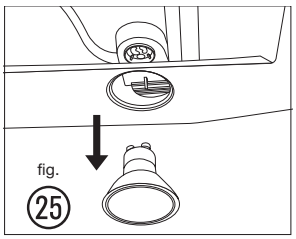

Technical data

Power supply	:	120V~, 60Hz
Power consumption	:	520W
Bulb type	:	2x 20W, 120V~ (type: GU10)
Power cable type	:	18AWG (Amer. Wire Gauge) 300V~, 105˚C

Troubleshooting

Problem	Cause	Solution
Excessive vibration.	The appliance is not fixed properly on the brackets.	Take down the appliance and check it is properly fixed.
	The fan blade is damaged.	Switch off the appliance. Repair to be carried out by qualified service personnel only.
	The fan motor is not fixed tightly.	
Light on, but fan does not work.	The fan blade is jammed.	
	The motor is damaged.	
Both light and fan do not work.	Light bulb broken.	Replace with a bulb with correct rating.
	Problem with electrical connection	Check the electrical connection with an electrician.
Suction performance is not good.	Distance between the appliance and the cooking place too large.	Readjust the distance (page 7, fig. 5 and table below)
	Metallic anti-grease filter is dirty.	Clean filters (see *Cleaning and maintenance).*

Environmental protection

Waste electrical products should not be disposed of with household waste. Please recycle where facilities exist. Check with your Local Authority or retailer for recycling advice.

Warranty information

Your appliance is covered by a one year limited warranty. For one year from your original date of purchase, Electrolux will pay all costs for repairing or replacing any parts of this appliance that prove to be defective in materials or workmanship when such appliance is installed, used and maintained in accordance with the provided instructions.

Exclusions

This warranty does not cover the following:

1. Products with original serial numbers that have been removed, altered or cannot be readily determined.
2. Product that has been transferred from its original owner to another party or removed outside the USA or Canada.
3. Rust on the interior or exterior of the unit.
4. Products purchased “as-is” are not covered by this warranty.
5. Food loss due to any refrigerator or freezer failures.
6. Products used in a commercial setting.
7. Service calls which do not involve malfunction or defects in materials or workmanship, or for appliances not in ordinary household use or used other than in accordance with the provided instructions.
8. Service calls to correct the installation of your appliance or to instruct you how to use your appliance.
9. Expenses for making the appliance accessible for servicing, such as removal of trim, cupboards, shelves, etc., which are not a part of the appliance when it is shipped from the factory.
10. Service calls to repair or replace appliance light bulbs, air filters, water filters, other consumables, or knobs, handles, or other cosmetic parts.
11. Surcharges including, but not limited to, any after hour, weekend, or holiday service calls, tolls, ferry trip charges, or mileage expense for service calls to remote areas, including the state of Alaska.
12. Damages to the finish of appliance or home incurred during installation, including but not limited to floors, cabinets, walls, etc.
13. Damages caused by: services performed by unauthorized service companies; use of parts other than genuine Electrolux parts or parts obtained from persons other than authorized service companies; or external causes such as abuse, misuse, inadequate power supply, accidents, fires, or acts of God.

DISCLAIMER OF IMPLIED WARRANTIES;

LIMITATION OF REMEDIES

CUSTOMER’S SOLE AND EXCLUSIVE REMEDY UNDER THIS LIMITED WARRANTY SHALL BE PRODUCT REPAIR OR REPLACEMENT AS PROVIDED HEREIN. CLAIMS BASED ON IMPLIED WARRANTIES, INCLUDING WARRANTIES OF MERCHANTABILITY OR FITNESS FOR A PARTICULAR PURPOSE, ARE LIMITED TO ONE YEAR OR THE SHORTEST PERIOD ALLOWED BY LAW, BUT NOT LESS THAN ONE YEAR. ELECTROLUX SHALL NOT BE LIABLE FOR CONSEQUENTIAL OR INCIDENTAL DAMAGES SUCH AS PROPERTY DAMAGE AND INCIDENTAL EXPENSES RESULTING FROM ANY BREACH OF THIS WRITTEN LIMITED WARRANTY OR ANY IMPLIED WARRANTY. SOME STATES AND PROVINCES DO NOT ALLOW THE EXCLUSION OR LIMITATION OF INCIDENTAL OR CONSEQUENTIAL DAMAGES, OR LIMITATIONS ON THE DURATION OF IMPLIED WARRANTIES, SO THESE LIMITATIONS OR EXCLUSIONS MAY NOT APPLY TO YOU. THIS WRITTEN WARRANTY GIVES YOU SPECIFIC LEGAL RIGHTS. YOU MAY ALSO HAVE OTHER RIGHTS THAT VARY FROM STATE TO STATE.

If You Need Service

Keep your receipt, delivery slip, or some other appropriate payment record to establish the warranty period should service be required. If service is performed, it is in your best interest to obtain and keep all receipts. Service under this warranty must be obtained by contacting Electrolux at the addresses or phone numbers below.

This warranty only applies in the USA and Canada. In the USA, your appliance is warranted by Electrolux Major Appliances North America, a division of Electrolux Home Products, Inc. In Canada, your appliance is warranted by Electrolux Canada Corp.
Electrolux authorizes no person to change or add to any obligations under this warranty. Obligations for service and parts under this warranty must be performed by Electrolux or an authorized service company. Product features or specifications as described or illustrated are subject to change without notice.

USA
1.800.944.9044
Electrolux Major Appliances
North America
10200 David Taylor Drive
Charlotte, NC 28262

Electrolux

Canada
1.800.265.8352
Electrolux Canada Corp.
5855 Terry Fox Way
Mississauga, Ontario, Canada
L5V 3E4