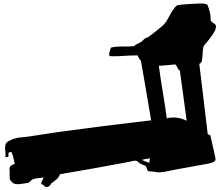

3.3AT

TREADMILL OWNER'S MANUAL
MANUEL DU PROPRIÉTAIRE DU TAPIS ROULANT
MANUAL DEL PROPIETARIO DE LA CAMINADORA

Read the TREADMILL GUIDE before using this OWNER'S MANUAL.
Lisez le guide du TAPIS ROULANT avant de vous référer au MANUEL DU PROPRIÉTAIRE.
Lea la GUÍA DE LA CAMINADORA antes de utilizar este MANUAL DEL PROPIETARIO.

3 ENGLISH
32 FRANÇAIS
62 ESPAÑOL

IMPORTANT PRECAUTIONS

SAVE THESE INSTRUCTIONS

When using an electrical product, basic precautions should always be followed, including the following: Read all instructions before using this treadmill. It is the responsibility of the owner to ensure that all users of this treadmill are adequately informed of all warnings and precautions. If you have any questions after reading this guide, contact Customer Tech Support at the number listed on the back cover of the OWNER'S MANUAL.

This treadmill is intended for in-home use only. Do not use this treadmill in any commercial, rental, school or institutional setting. Failure to comply will void the warranty.

AFG14_OM_3.3AT_Rev1_2.indd 2-3
7/31/14 4:41 PM

DANGER

TO REDUCE THE RISK OF ELECTRICAL SHOCK:

Always unplug the treadmill from the electrical outlet immediately after using, before cleaning, performing maintenance and putting on or taking off parts.

WARNING

TO REDUCE THE RISK OF BURNS, FIRE, ELECTRICAL SHOCK OR INJURY TO PERSONS:

- Never use the treadmill before securing the safety tether clip to your clothing.
- If you experience any kind of pain, including but not limited to chest pains, nausea, dizziness, or shortness of breath, stop exercising immediately and consult your physician before continuing.
- When exercising, always maintain a comfortable pace.
- Do not wear clothes that might catch on any part of the treadmill.
- Always wear athletic shoes while using this equipment.
- Do not jump on the treadmill.
- At no time should more than one person be on treadmill while in operation.
- This treadmill should not be used by persons weighing more than specified in the OWNER'S MANUAL WARRANTY SECTION. Failure to comply will void the warranty.
- When lowering the treadmill deck, wait until rear feet are firmly on the floor before stepping on the deck.
- Disconnect all power before servicing or moving the equipment. To clean, wipe surfaces down with soap and slightly damp cloth only; never use solvents. (See MAINTENANCE)
- The treadmill should never be left unattended when plugged in. Unplug from outlet when not in use, and before putting on or taking off parts.
- Do not operate under blanket or pillow. Excessive heating can occur and cause fire, electric shock, or injury to persons.
- Connect this exercise product to a properly grounded outlet only.

WARNING

TO REDUCE THE RISK OF BURNS, FIRE, ELECTRICAL SHOCK OR INJURY TO PERSONS:

- At NO time should children under the age of 13 or pets be within 10 feet of the machine.
- At NO time should children under the age of 13 use the treadmill.
- Children over the age of 13 or disabled persons should not use the treadmill without adult supervision.
- Use the treadmill only for its intended use as described in the treadmill guide and owner's manual.
- Do not use other attachments that are not recommended by the manufacturer. Attachments may cause injury.
- Never operate the treadmill if it has a damaged cord or plug, if it is not working properly, if it has been dropped or damaged, or immersed in water. Contact Customer Tech Support at the number on the back cover to schedule service.
- Keep power cord away from heated surfaces. Do not carry this unit by its supply cord or use the cord as a handle.
- Never operate the treadmill with the air opening blocked. Keep the air opening clean, free of lint, hair, and the like.
- To prevent electrical shock, never drop or insert any object into any opening.
- Do not operate where aerosol (spray) products are being used or when oxygen is being administered.
- To disconnect, turn all controls to the off position, then remove plug from outlet.
- Do not use treadmill in any location that is not temperature controlled, such as but not limited to garages, porches, pool rooms, bathrooms, car ports or outdoors. Failure to comply may void the warranty.
- This treadmill is intended for in-home use only. Do not use this treadmill in any commercial, rental, school or institutional setting. Failure to comply will void the warranty.
- Do not remove the console covers unless instructed by Customer Tech Support. Service should only be done by an authorized service technician

It is essential that your treadmill is used only indoors, in a climate controlled room. If your treadmill has been exposed to colder temperatures or high moisture climates, it is strongly recommended that the treadmill is warmed up to room temperature before first time use. Failure to do so may cause premature electronic failure.

WARNING

This product contains chemicals known to the State of California to cause cancer and birth defects or other reproductive harm.

GROUNDING INSTRUCTIONS

This product must be grounded. If a treadmill should malfunction or breakdown, grounding provides a path of least resistance for electrical current to reduce the risk of electrical shock. This product is equipped with a cord having an equipment-grounding conductor and a grounding plug. The plug must be plugged into an appropriate outlet that is properly installed and grounded in accordance with local codes and ordinances.

DANGER

Improper connection of the equipment-grounding conductor can result in a risk of electric shock. Check with a qualified electrician or serviceman if you are in doubt as to whether the product is properly grounded. Do not modify the plug provided with the product. If it will not fit the outlet, have a proper outlet installed by a qualified electrician.

This product is for use on a nominal 110-120 Volt circuit and has a grounding plug that looks like the plug in the illustration. Make sure that the product is connected to an outlet having the same configuration as the plug. No adapter should be used with this product.

This product must be used on a dedicated circuit. To determine if you are on a dedicated circuit, shut off the power to that circuit and observe if any other devices lose power. If so, move devices to a different circuit. Note: There are usually multiple outlets on one circuit. This treadmill should be used with a minimum 20-amp circuit.

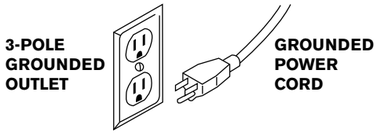

WARNING

Connect this exercise product to a properly grounded outlet only.

Never operate product with a damaged cord or plug even if it is working properly. Never operate any product if it appears damaged, or has been immersed in water. Contact Customer Tech Support for replacement or repair.

ASSEMBLY

WARNING

There are several areas during the assembly process that special attention must be paid. It is very important to follow the assembly instructions correctly and to make sure all parts are firmly tightened. If the assembly instructions are not followed correctly, the treadmill could have parts that are not tightened and will seem loose and may cause irritating noises. To prevent damage to the treadmill, the assembly instructions must be reviewed and corrective actions should be taken.

Before proceeding, find your treadmill's serial number located on a white barcode sticker on the base frame as shown in this image.

SERIAL NUMBER LOCATION

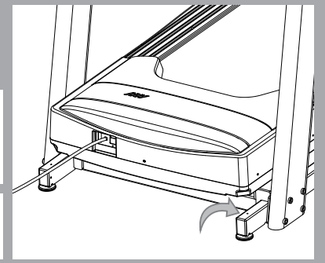

ENTER YOUR SERIAL NUMBER AND MODEL NAME IN THE BOXES BELOW:

SERIAL NUMBER:

TM

MODEL NAME: **AFG** _____ **TREADMILL**

» Refer to the SERIAL NUMBER and MODEL NAME when calling for service.

AFG14_OM_3.3AT_Rev1_2.indd 6-7 7/31/14 4:41 PM

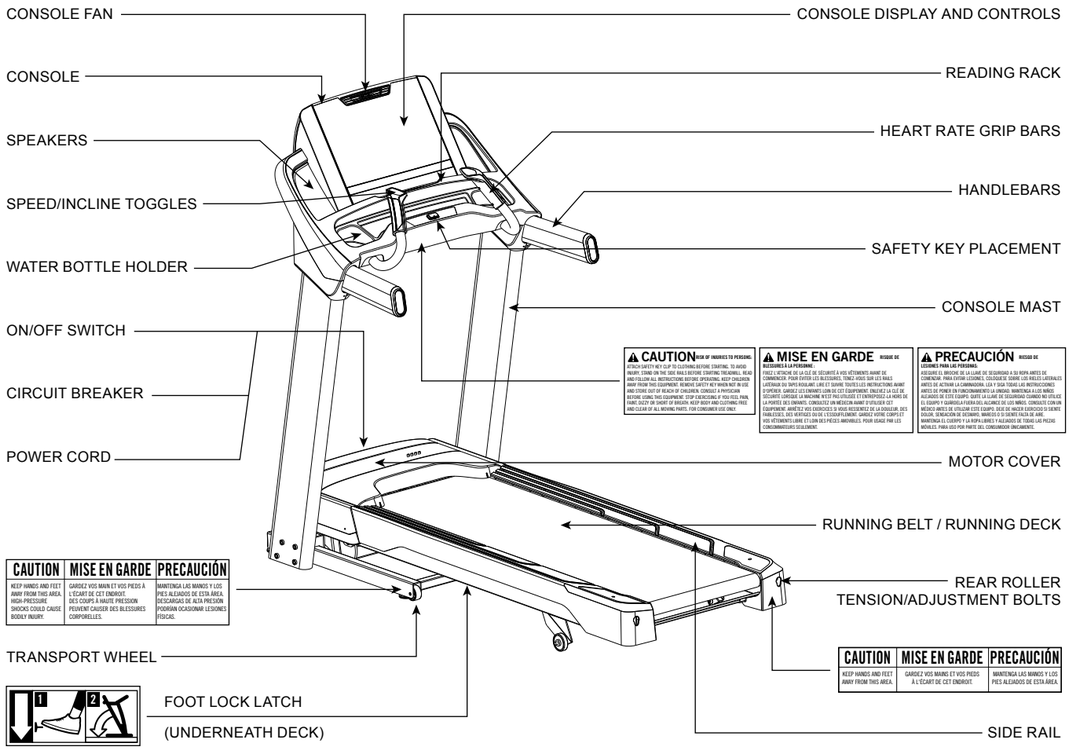

TOOLS REQUIRED:

- ☐ T-Wrench
- ☐ L-Wrench
- ☐ Screwdriver (not included)

PARTS INCLUDED:

- ☐ 2 Console Masts
- ☐ 1 Console Assembly
- ☐ 2 Sets Console Mast Covers
- ☐ 2 Heart Rate Grip Bars
- ☐ 1 Hardware Kit
- ☐ 1 Safety Key
- ☐ 1 Power Cord
- ☐ 1 USB Cover
- ☐ 1 Rubber Pad For Media Players
- ☐ 1 Audio Adapter Cable
- ☐ 1 Bottle of Silicone Lubricant (for 2 applications)

NEED HELP?

If you have questions or if there are any missing parts, contact Customer Tech Support. Contact information is located on the back cover of this manual.

PRE ASSEMBLY

UNPACKING

Place the treadmill carton on a level flat surface. It is recommended that you place a protective covering on your floor. Take CAUTION when handling and transporting this unit. Never open box when it is on its side. Once the banding straps have been removed, do not lift or transport this unit unless it is fully assembled and in the upright folded position, with the lock latch secure. Unpack and assemble the unit where it will be used. The enclosed treadmill is equipped with high-pressure shocks and may spring open if mishandled. Never grab hold of any portion of the incline frame and attempt to lift or move the treadmill.

⚠ WARNING

- DO NOT ATTEMPT TO LIFT THE TREADMILL! Do not move or lift treadmill from packaging until specified to do so in the assembly instructions. You may remove the plastic wrap from console masts.
- FAILURE TO FOLLOW THESE INSTRUCTIONS COULD RESULT IN INJURY!

⚠ IMPORTANT NOTES

- During each assembly step, ensure that ALL nuts and bolts are in place and partially threaded. It is recommended you complete the full assembly of your unit before completely tightening any ONE bolt.
- Several parts have been pre-lubricated to aid in assembly and usage. Please do not wipe this off. If you have difficulty, a light application of lithium bike grease is recommended.

AFG14_OM_3.3AT_Rev1_2.indd 8-9
7/31/14 4:41 PM

ASSEMBLY **STEP 1**

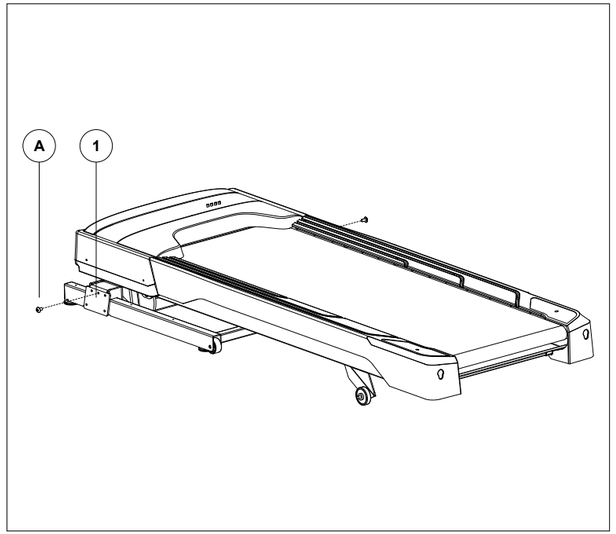

HARDWARE FOR STEP 1		
PART	TYPE	QTY
A	BOLT	2

A Cut the yellow banding straps and lift the running deck upward to remove all contents from underneath the running deck.

B Open **HARDWARE FOR STEP 1**.

C Insert 2 **BOLTS (A)** into **MAIN FRAME BRACKETS (1)**.

ASSEMBLY **STEP 2**

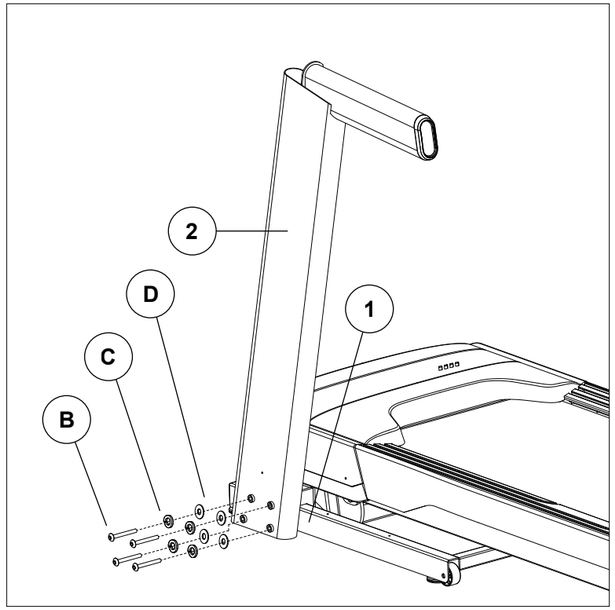

HARDWARE FOR STEP 2		
PART	TYPE	QTY
B	BUTTON HEAD BOLT	8
C	SPRING WASHER	8
D	FLAT WASHER	8

A Open **HARDWARE FOR STEP 2**.

B Attach **LEFT CONSOLE MAST (2)** so that **BOLT (A)** sits on the **NOTCHED HOLE** in the bottom of the **CONSOLE MAST**.

C Attach **LEFT CONSOLE MAST (2)** to **MAIN FRAME BRACKET (1)** using **4 BOLTS (B)**, **4 SPRING WASHERS (C)**, and **4 FLAT WASHERS (D)**.

AFG14_OM_3.3AT_Rev1_2.indd 10-11 7/31/14 4:41 PM

ASSEMBLY **STEP 2** (continued)

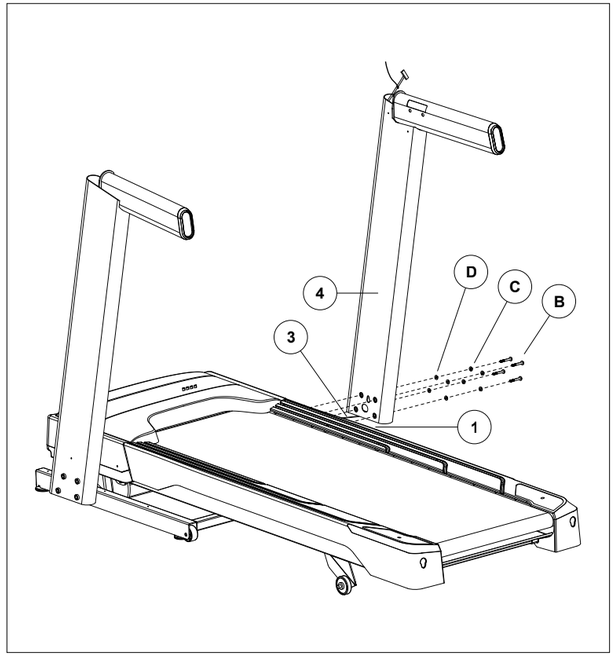

HARDWARE FOR STEP 2		
PART	TYPE	QTY
B	BUTTON HEAD BOLT	8
C	SPRING WASHER	8
D	FLAT WASHER	8

NOTE: Do not fully tighten bolts until step 6.

NOTE: Be careful not to pinch the console cable while attaching the right console mast.

A Pull the **CONSOLE CABLE (3)** out of the treadmill base frame using the **LEAD WIRE**. Attach **CONSOLE CABLE** to the **CONSOLE CABLE** in the bottom of the mast. The other end of the **CONSOLE CABLE** should be located at the top of the mast. Detach and discard **LEAD WIRES**.

B Align the RIGHT **CONSOLE MAST (4)** so that **BOLT (A)** sits in the **NOTCHED HOLE** in the bottom of the **CONSOLE MAST**.

C Attach **CONSOLE MAST (4)** to **MAIN FRAME BRACKET (1)** using **4 BOLTS (B)**, **4 SPRING WASHERS (C)**, and **4 FLAT WASHERS (D)**.

ASSEMBLY **STEP 4**

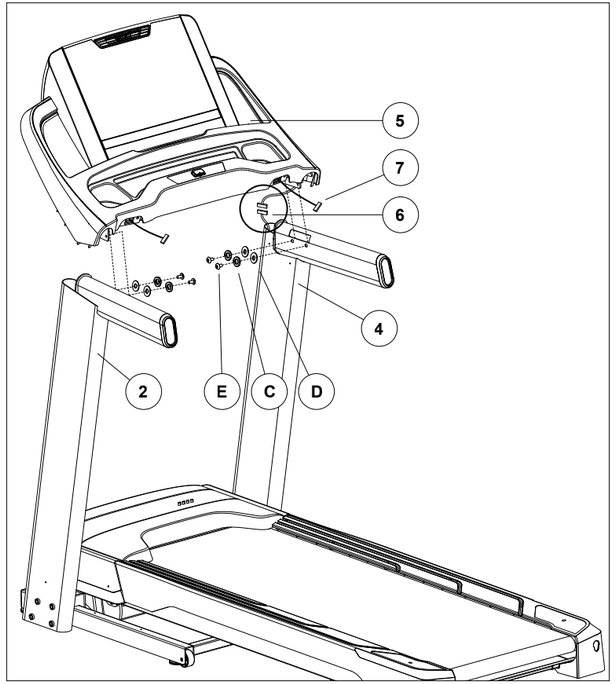

HARDWARE FOR STEP 4		
PART	TYPE	QTY
E	BUTTON HEAD BOLT	4
C	SPRING WASHER	4
D	FLAT WASHER	4

NOTE: Be careful not to pinch the console cables while attaching the console.

A Open **HARDWARE FOR STEP 4**.

B Gently place **CONSOLE (5)** on top of **CONSOLE MASTS (2 & 4)**.

C Connect the **CONSOLE CABLES (6)** and tuck them inside the right **CONSOLE MAST (4)**. Do not connect the **HEART RATE CABLES (7)** until STEP 5.

D Connect the **CONSOLE (5)** to the right **CONSOLE MAST (4)** using 2 **BOLTS (E)**, 2 **SPRING WASHERS (C)** and 2 **FLAT WASHERS (D)**.

E Repeat STEP D on other side.

AFG14_OM_3.3AT_Rev1_2.indd 12-13 7/31/14 4:41 PM

ASSEMBLY **STEP 5**

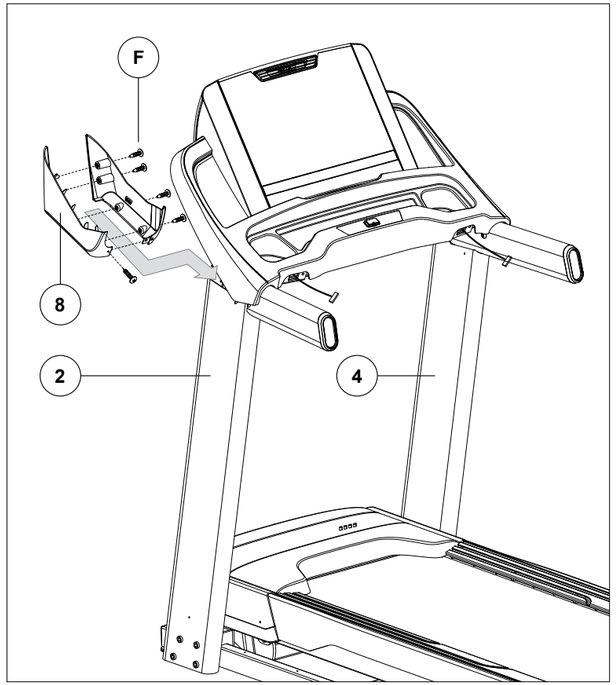

HARDWARE FOR STEP 5		
PART	TYPE	QTY
F	SCREW	10

A Open **HARDWARE FOR STEP 5**.

B Slide both **CONSOLE MAST COVERS (8)** under the console around **CONSOLE MAST (2)**.

C Attach **CONSOLE MAST COVERS (8)** using 4 **SCREWS (F)** from the inside and 1 **SCREW (F)** from the front.

D Repeat on other side **(4)**.

ASSEMBLY **STEP 6**

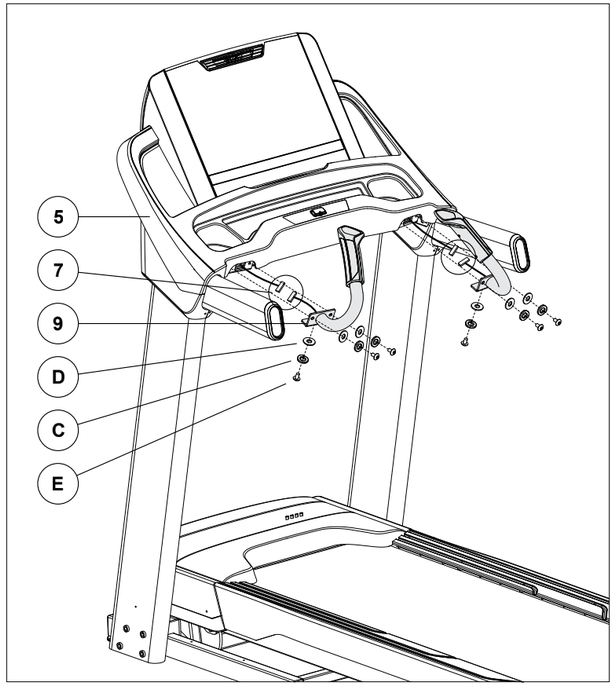

HARDWARE FOR STEP 6		
PART	TYPE	QTY
E	BUTTON HEAD BOLT	6
C	SPRING WASHER	6
D	FLAT WASHER	6

NOTE: Be careful not to pinch the console cables while attaching the console.

A Open **HARDWARE FOR STEP 6**.

B Connect the **HEART RATE CABLES (7)** and carefully tuck them inside the **CONSOLE (5).**

C Attach **HEART RATE BAR (9)** to the **CONSOLE (5)** using using 3 **BOLTS (E)**, 3 **SPRING WASHERS (C)** and 3 **FLAT WASHERS (D)**.

D Repeat on other side.

ASSEMBLY COMPLETE!

Before the first use, lubricate the treadmill deck by following the instructions in the MAINTENANCE section in the TREADMILL GUIDE.

TREADMILL OPERATION

This section explains how to use your treadmill's console and programming. The BASIC OPERATION section in the TREADMILL GUIDE has instructions for the following:

- **LOCATION OF THE TREADMILL**
- **USING THE SAFETY KEY**
- **FOLDING THE TREADMILL**
- **MOVING THE TREADMILL**
- **LEVELING THE TREADMILL**
- **TENSIONING THE RUNNING BELT**
- **CENTERING THE RUNNING BELT**
- **USING THE HEART RATE FUNCTION**

AFG14_OM_3.3AT_Rev1_2.indd 16-17

7/31/14 4:41 PM

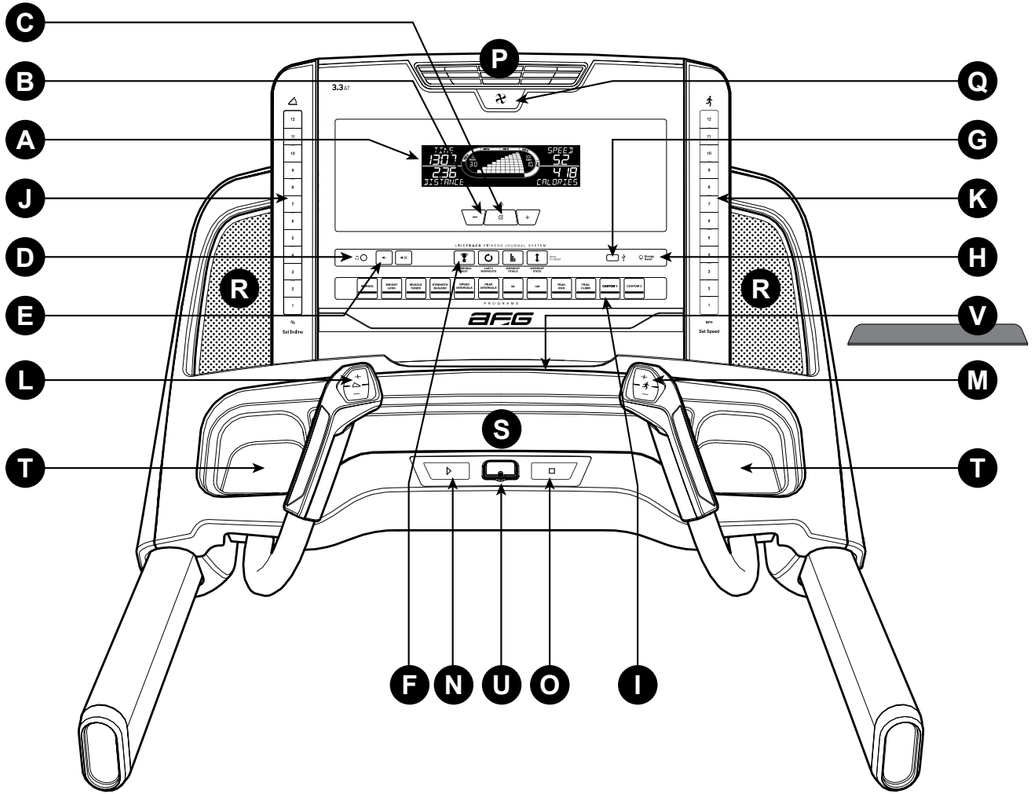

CONSOLE OPERATION

Note: There is a thin protective sheet of clear plastic on the overlay of the console that should be removed before use.

A) **LCD DISPLAY WINDOW:** time, incline, distance, LIVETRACK, speed, laps, calories, and heart rate.
B) **PROGRAMMING – / + KEYS:** Used to cycle through programs and LIVETRACK workout statistics.
C) **ENTER:** used to confirm a selection. Press to change display feedback during workout.
D) **AUDIO IN JACK:** plug your media player into the console using the included audio adaptor cable.
E) **VOLUME:** used to adjust volume up or down.
F) **LIVETRACK FITNESS JOURNAL SYSTEM:** see page 26 for more information.
G) **USB PORT:** insert USB stick for any software updates.
H) **ENERGY SAVER LIGHT:** indicates if machine is in Energy Saver mode.
I) **PROGRAM KEYS:** press to select workout.
J) **INCLINE QUICK KEYS:** used to reach desired incline quickly.
K) **SPEED QUICK KEYS:** used to reach desired speed quickly.
L) **INCLINE – / + KEYS:** used to adjust incline level.
M) **SPEED – / + KEYS:** used to adjust speed level.
N) **GO / PAUSE:** used to start workout, pause workout, and restart after pause.
O) **STOP / HOLD TO RESET:** used to stop machine and also will reset machine when held down.
P) **FAN:** personal workout fan
Q) **FAN KEY:** press to turn fan on and off.
R) **SPEAKERS:** plays music through speakers when connected to your media player.
S) **READING RACK:** holds reading material.
T) **STORAGE POCKETS:** holds personal items, i.e. water bottle, brought with you.
U) **SAFETY KEY:** enables treadmill when safety key is inserted.
V) **RUBBER PAD:** place rubber pad above reading rack to help secure your media player.

AFG14_OM_3.3AT_Rev1_2.indd 18-19
7/31/14 4:41 PM

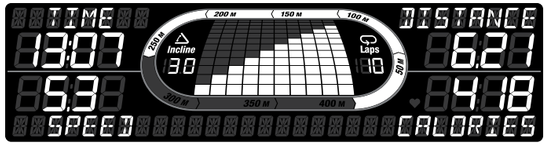

DISPLAY WINDOWS

- **TIME:** Shown as minutes : seconds. View the time remaining or the time elapsed in your workout.
- **DISTANCE:** Shown as miles. Indicates distance traveled or distance remaining during your workout.
- **SPEED:** Shown as MPH. Indicates how fast the belt is moving.
- **CALORIES:** Total calories burned during your workout.
- **HEART RATE (HR):** Shown as BPM (beats per minute). Used to monitor your heart rate (displayed when contact is made with both pulse grips).
- **INCLINE:** Shown as percent. Indicates the incline level of the running surface.
- **TRACK:** Follows progress around a simulated track. Segments light up with every 50 meters completed.
- **LAPS:** Shows how many 400 meter (¼ mile) laps have been completed.
- **LIVETRACK:** When LIVETRACK is activated, the LIVETRACK information is displayed. See page 26.

GETTING STARTED

1) Check to make sure no objects are placed on the belt that will hinder the movement of the treadmill.
2) Plug in the power cord and turn the treadmill ON.
3) Stand on the side rails of the treadmill.
4) Attach the safety key clip to part of your clothing making sure that it is secure and will not become detached during operation.
5) Insert the safety key into the safety keyhole in the console.
6) Select User 1, User 2, or Guest using **– / +** and press ENTER.
7) You have two options to start your workout:

A) QUICK START UP

Simply press the GO key to begin working out.
Time, distance, and calories will all count up from zero. OR...

B) SELECT A PROGRAM

8) Press desired PROGRAM BUTTON to select workout.
9) Set workout time using **– / +** and press ENTER.
10) Set workout level using **– / +** and press ENTER.
11) Press GO to begin workout.
NOTE: You can adjust the speed and incline during your workout.

FINISHING YOUR WORKOUT

When your workout is complete, the console will display “workout complete” and beep. Your workout information will stay displayed on the console for 30 seconds and then reset.

TO RESET THE CONSOLE

Hold STOP key for 3 seconds.

TO CLEAR CURRENT SELECTION

To clear the current program selection or screen, hold the stop button for 3 seconds.

AFG14_OM_3.3AT_Rev1_2.indd 20-21 7/31/14 4:41 PM

PROGRAM INFORMATION

1) **MANUAL:** Adjust your speed and incline manually during your workout.

2) **WEIGHT LOSS:** Promotes weight loss by increasing and decreasing the speed and incline, while keeping you in your fat burning zone. Speed and Incline changes, segments repeat every 30 seconds.

WEIGHT LOSS													
Segment		Warm Up		1	2	3	4	5	6	7	8	Cool Down	
Time		4:00 MIN		Each segment is 30 seconds								4:00 MIN	
Level 1	Incline	0.0	0.5	1.5	1.5	1.0	0.5	0.5	0.5	1.0	1.5	0.5	0.0
	Speed	1.0	1.5	2.0	2.5	3.0	3.5	4.0	3.5	3.0	2.5	2.3	1.5
Level 2	Incline	0.0	0.5	1.5	1.5	1.0	0.5	1.0	0.5	1.0	1.5	0.5	0.0
	Speed	1.3	1.9	2.5	3.0	3.5	4.0	4.5	4.0	3.5	3.0	2.6	1.8
Level 3	Incline	0.5	1.0	2.0	2.0	1.5	1.0	1.0	1.0	1.5	2.0	1.0	0.5
	Speed	1.5	2.3	3.0	3.5	4.0	4.5	5.0	4.5	4.0	3.5	3.0	2.0
Level 4	Incline	0.5	1.0	2.0	2.0	1.5	1.0	1.0	1.0	1.5	2.0	1.0	0.5
	Speed	1.8	2.6	3.5	4.0	4.5	5.0	5.5	5.0	4.5	4.0	3.4	2.3
Level 5	Incline	1.0	1.5	2.5	2.5	2.0	1.5	1.5	1.5	2.0	2.5	1.5	1.0
	Speed	2.0	3.0	4.0	4.5	5.0	5.5	6.0	5.5	5.0	4.5	3.8	2.5
Level 6	Incline	1.0	1.5	2.5	2.5	2.0	1.5	1.5	1.5	2.0	2.5	1.5	1.0
	Speed	2.3	3.4	4.5	5.0	5.5	6.0	6.5	6.0	5.5	5.0	4.1	2.8
Level 7	Incline	1.5	2.0	3.0	3.0	2.5	2.0	2.0	2.0	2.5	3.0	2.0	1.5
	Speed	2.5	3.8	5.0	5.5	6.0	6.5	7.0	6.5	6.0	5.5	4.5	3.0
Level 8	Incline	1.5	2.0	3.0	3.0	2.5	2.0	2.0	2.0	2.5	3.0	2.0	1.5
	Speed	2.8	4.1	5.5	6.0	6.5	7.0	7.5	7.0	6.5	6.0	4.9	3.3
Level 9	Incline	2.0	2.5	3.5	3.5	3.0	2.5	2.5	2.5	3.0	3.5	2.5	2.0
	Speed	3.0	4.5	6.0	6.5	7.0	7.5	8.0	7.5	7.0	6.5	5.3	3.5
Level 10	Incline	2.0	2.5	3.5	3.5	3.0	2.5	2.5	2.5	3.0	3.5	2.5	2.0
	Speed	3.3	4.9	6.5	7.0	7.5	8.0	8.5	8.0	7.5	7.0	5.6	3.8

3) **MUSCLE TONER:** Tones muscles by adjusting incline gradually while keeping you in your fat burning zone. Segments change every 30 seconds. Time based goal with 10 difficulty levels to choose from.

MUSCLE TONER - INCLINE ONLY																				
Segments	Warm Up				Program Segments - Repeat												Cool Down			
Time	4:00 MIN				Each segment is 30 seconds												4:00 MIN			
Level 1	0	0	0	1	1	1	2	2	1	1	2	2	1	1	2	2	1	0	0	0
Level 2	0	0	1	2	1	2	2	3	1	2	2	3	1	2	2	3	2	1	0	0
Level 3	0	1	1	2	2	2	3	3	2	2	3	3	2	2	3	3	2	1	1	0
Level 4	1	1	1	2	2	3	3	4	2	3	3	4	2	3	3	4	2	1	1	1
Level 5	2	2	2	2	3	3	4	4	3	3	4	4	3	3	4	4	2	2	2	2
Level 6	2	2	2	3	3	4	4	5	3	4	4	5	3	4	4	5	3	2	2	2
Level 7	3	3	3	3	5	5	6	6	5	5	6	6	5	5	6	6	3	3	3	3
Level 8	3	3	3	4	6	6	7	7	6	6	7	7	6	6	7	7	4	3	3	3
Level 9	3	3	4	4	7	7	8	9	7	7	8	10	7	7	10	10	4	4	3	3
Level 10	3	4	4	5	8	10	10	10	8	8	11	11	8	8	12	12	5	4	4	3

4) **STRENGTH BUILDER:** Time segments vary from 30 to 90 segments long to challenge your stamina and strength. Time based goal with 10 difficulty levels to choose from.

STRENGTH BUILDER - INCLINE ONLY																			
Segment	Warm Up			1	2	3	4	5	6	7	8	9	10	11	12	Cool Down			
Seconds	4:00 MIN			30	60	90	60	90	45	60	45	90	90	30	30	4:00 MIN			
Level 1	1	1	2	2	2	2	1	2	2	1	2	2	1	2	2	2	1	1	1
Level 2	1	1	2	3	2	3	2	2	3	2	2	3	2	2	3	2	1	1	1
Level 3	1	1	2	4	3	4	2	3	4	2	3	4	2	3	4	2	1	1	1
Level 4	1	1	2	5	4	5	3	4	5	3	4	5	3	4	5	2	1	1	1
Level 5	1	2	2	5	5	5	4	5	5	4	5	5	4	5	5	2	2	2	1
Level 6	1	2	2	3	6	5	6	5	5	6	5	5	6	5	5	6	3	2	2	1
Level 7	1	2	2	3	7	6	7	5	6	7	5	6	7	5	6	7	3	2	2	1
Level 8	1	1	1	2	9	8	9	8	8	9	8	8	9	8	8	9	2	1	1	1
Level 9	2	2	2	3	11	10	11	9	10	11	9	10	11	9	10	11	2	1	1	1
Level 10	2	3	4	5	12	12	12	11	12	12	11	12	12	11	12	12	3	2	2	1

5) **SPEED INTERVALS:** Improves your strength, speed and endurance by increasing and decreasing the speed throughout your workout to involve your heart and other muscles. Speed changes and segments repeat 90 seconds and 30 seconds.

SPEED INTERVALS						
Segment	Warm Up		1	2	Cool Down	
Time	4:00 MIN		90 SEC	30 SEC	4:00 MIN	
Level 1	1.0	1.5	2.0	4.0	1.5	1.0
Level 2	1.0	1.5	2.0	4.5	1.5	1.0
Level 3	1.3	1.9	2.5	5.0	1.9	1.3
Level 4	1.3	1.9	2.5	5.5	1.9	1.3
Level 5	1.5	2.3	3.0	6.0	2.3	1.5
Level 6	1.5	2.3	3.0	6.5	2.3	1.5
Level 7	1.8	2.6	3.5	7.0	2.6	1.8
Level 8	1.8	2.6	3.5	7.5	2.6	1.8
Level 9	2.0	3.0	4.0	8.0	3.0	2.0
Level 10	2.0	3.0	4.0	8.5	3.0	2.0

6) **PEAK INTERVALS:** Improves your strength, speed and endurance by increasing and decreasing the speed and incline throughout your workout to involve your heart and other muscles. Speed and Incline changes, segments repeat 90 seconds and 30 seconds.

PEAK INTERVALS							
Segment		Warm Up		1	2	Cool Down	
Time		4:00 MIN		90 SEC	30 SEC	4:00 MIN	
Level 1	Speed	1.0	1.5	2.0	4.0	1.5	1.0
	Incline	1.0	1.5	0.5	1.5	1.5	0.0
Level 2	Speed	1.0	1.5	2.0	4.5	1.5	1.0
	Incline	1.5	2.5	3.0	6.5	2.5	1.5
Level 3	Speed	1.3	1.9	2.5	5.0	1.9	1.3
	Incline	2.0	3.0	4.0	7.5	3.0	2.0
Level 4	Speed	1.3	1.9	2.5	5.5	1.9	1.3
	Incline	2.0	3.0	4.0	8.0	3.0	2.0
Level 5	Speed	1.5	2.3	3.0	6.0	2.3	1.5
	Incline	2.5	3.5	4.5	8.5	3.5	2.5
Level 6	Speed	1.5	2.3	3.0	6.5	2.3	1.5
	Incline	2.5	3.5	4.5	9.0	3.5	2.5
Level 7	Speed	1.8	2.6	3.5	7.0	2.6	1.8
	Incline	2.5	4.0	5.5	9.5	4.0	3.0
Level 8	Speed	1.8	2.6	3.5	7.5	2.6	1.8
	Incline	3.0	4.0	5.5	9.5	4.0	3.0
Level 9	Speed	2.0	3.0	4.0	8.0	3.0	2.0
	Incline	3.0	4.5	6.0	10.0	5.0	3.0
Level 10	Speed	2.0	3.0	4.0	8.5	3.0	2.0
	Incline	3.0	4.5	6.0	10.0	5.0	3.0

AFG14_OM_3.3AT_Rev1_2.indd 22-23 7/31/14 4:41 PM

PROGRAM INFORMATION

7-8) 5K/10K: Programs that allow you to set and work toward a distance goal. Treadmill automatically adjusts incline to simulate running on an actual course. Incline changes and all segments are 0.16 Km.

5K / 10K - INCLINE ONLY																				
Segment	Warm Up		1	2	3	4	5	6	7	8	9	10	11	12	13	14	15	Cool Down	
Incline	4:00 MIN		Each segment is 0.16 KM															4:00 MIN	
Level 1	0.0	0.5	1.0	3.0	1.0	3.0	2.0	3.0	2.0	3.5	2.0	3.0	2.0	3.0	1.0	3.0	1.0	0.5	0.0
Level 2	0.0	0.5	1.0	3.0	2.0	3.0	2.0	3.0	2.5	3.5	2.5	3.0	2.0	3.0	2.0	3.0	1.0	0.5	0.0
Level 3	0.5	1.0	1.5	3.5	1.5	3.5	2.5	3.5	2.5	4.0	2.5	3.5	2.5	3.5	1.5	3.5	1.5	1.0	0.5
Level 4	0.5	1.0	1.5	3.5	2.5	3.5	2.5	3.5	3.0	4.0	3.0	3.5	2.5	3.5	2.5	3.5	1.5	1.0	0.5
Level 5	1.0	1.5	2.0	4.0	2.0	4.0	3.0	4.0	3.0	4.5	3.0	4.0	3.0	4.0	2.0	4.0	2.0	1.5	1.0
Level 6	1.0	1.5	2.0	4.0	3.0	4.0	3.0	4.0	3.5	4.5	3.5	4.0	3.0	4.0	3.0	4.0	2.0	1.5	1.0
Level 7	1.5	2.0	2.5	4.5	2.5	4.5	3.5	4.5	3.5	5.0	3.5	4.5	3.5	4.5	2.5	4.5	2.5	2.0	1.5
Level 8	1.5	2.0	2.5	4.5	3.5	4.5	3.5	4.5	4.0	5.0	4.0	4.5	3.5	4.5	3.5	4.5	2.5	2.0	1.5
Level 9	2.0	2.5	3.0	5.0	3.0	5.0	4.0	5.0	4.0	5.5	4.0	5.0	4.0	5.0	3.0	5.0	3.0	2.5	2.0
Level 10	2.0	2.5	3.0	5.0	4.0	5.0	4.0	5.0	4.5	5.5	4.5	5.0	4.0	5.0	4.0	5.0	3.0	2.5	2.0

9) TRAIL RUN: Simulates climbing mountains by increasing and decreasing the incline. Time-based goal with 10 difficulty levels to choose from.

TRAIL RUN - INCLINE CHANGES																				
Segment	Warm Up				Program Segments - Repeat												Cool Down			
Seconds	4:00 MIN				30	60	60	30	30	60	30	60	60	30	30	60	4:00 MIN			
Level 1	1	1	1	1	3	1	1	3	3	1	3	1	1	3	3	1	1	1	1	1
Level 2	1	1	1	2	3	1	1	3	3	1	3	1	1	3	3	1	2	1	1	1
Level 3	1	1	1	2	4	2	2	4	4	2	4	2	2	4	4	2	2	1	1	1
Level 4	1	1	1	3	4	2	2	4	4	2	4	2	2	4	4	2	3	1	1	1
Level 5	1	2	3	3	5	3	3	5	5	3	5	3	3	5	5	3	3	3	2	1
Level 6	1	2	3	4	5	3	3	5	5	3	5	3	3	5	5	3	4	3	2	1
Level 7	1	2	3	4	6	4	4	6	6	4	6	4	4	6	6	4	4	3	2	1
Level 8	1	2	3	5	6	4	4	6	6	4	6	4	4	6	6	4	5	3	2	1
Level 9	2	2	3	5	7	5	5	7	7	5	7	5	5	7	7	5	5	3	2	2
Level 10	2	2	4	6	7	5	5	7	7	5	7	5	5	7	7	5	6	4	2	2

10) TRAIL CLIMB: This high-intensity ascending cardio program gives you a solid and varied workout with 10 different challenge levels.

TRAIL CLIMB - INCLINE ONLY																				
Segment	Warm Up				Program Segments - Repeat												Cool Down			
Seconds	4:00 MIN				30	60	60	30	30	60	30	60	60	30	30	60	4:00 MIN			
Level 1	1	1	2	3	5	5	6	6	6	6	6	6	6	7	7	7	3	2	1	1
Level 2	1	1	2	4	5	6	6	6	6	6	7	7	7	8	8	8	4	2	1	1
Level 3	1	1	1	1	6	6	6	7	8	8	8	7	8	8	7	8	1	1	1	1
Level 4	1	1	1	1	6	6	6	6	7	8	8	9	9	9	9	9	1	1	1	1
Level 5	1	1	1	2	5	6	6	6	7	8	9	9	9	9	10	10	1	2	2	1
Level 6	2	2	2	3	5	6	6	6	7	8	9	9	10	10	10	10	2	1	1	1
Level 7	2	3	3	4	6	6	6	6	7	7	8	9	9	10	11	11	2	2	1	1
Level 8	2	3	4	4	6	6	6	7	7	8	8	9	9	10	11	11	3	2	1	1
Level 9	2	4	4	5	7	7	7	8	8	9	9	9	10	11	12	12	3	2	1	1
Level 10	3	4	5	6	7	7	8	8	9	9	9	10	11	11	12	12	4	2	1	1

CUSTOM PROGRAM INFORMATION

Lets you create and reuse a perfect workout for you with specific speed, incline and time combination. The ultimate in personal programming. Time-based goal.

1) Press the CUSTOM program button and press ENTER.
2) Set the workout time using the **– / +** and press ENTER.
3) Use **– / +** to set the speed for each segment. Press ENTER to confirm the speed setting for each segment of the workout.
4) Use **– / +** to set the incline for each segment. Press ENTER to confirm the incline setting for each segment of the workout.
5) Press GO to begin workout.

DATE AND CLOCK SETUP

1) Enter setup mode: Press and hold 1 & 2 SPEED QUICK KEYS for 3-5 seconds.
2) Use **– / +** to change settings and press ENTER to confirm settings.
3) Settings include: MONTH, DAY, YEAR, HOUR, MINUTE, and AM/PM.
4) Review settings: You can review your settings at any time while in setup mode.
   Use the ENTER button to scroll through settings.
5) Exit setup mode: To confirm the DATE and TIME, press and hold ENTER for 3 seconds.
6) To reset simply reenter setup mode and adjust DATE and TIME to the correct setting.

AFG14_OM_3.3AT_Rev1_2.indd 24-25 7/31/14 4:41 PM

LIVETRACK™ FITNESS JOURNAL SYSTEM

The integrated LIVETRACK software allows you to track your fitness progress over time without the need for paper journals or logs. With LIVETRACK, you can easily compare your current workout to your last, average or lifetime workout totals. With quick access to feedback like duration of workout or calories burned during previous workouts, you'll be able to see the progress you've made.

SETUP

To activate LIVETRACK fitness journal system a user MUST be chosen before the program begins. To select a USER 1 or 2, use **– / +** and press **ENTER** to confirm. All workout data will accumulate only for the user that is chosen. NOTE: If no user is selected data will not be tracked.

RESET

Reset all recorded information for User 1 or User 2 by selecting the user and then holding down the **WORKOUT STATS/HOLD TO RESET** key for 10 seconds. NOTE: This step is permanent and will delete ALL previously accumulated data for the chosen user.

ACCUMULATED DATA

Once LIVETRACK is activated, you can scroll through your accumulated data in multiple formats by pressing the LIVETRACK buttons. A workout is saved when: the program ends, the console is paused and not resumed within 5 minutes, or the STOP button is held to reset the console.

1) **PERSONAL BEST:** allows user to scroll through and view 5 personal bests for all previous workouts. They are:
   - Best Mile – fastest time in which the user has completed a mile
   - Best 5K – fastest time in which the user has completed a 5K
   - Longest Workout – (time)
   - Longest Workout – (distance)
   - Calories Burned – most calories user has burned in one workout

2) **LAST 5 WORKOUTS:** allows you to view data from your previous 5 workouts. The following data from these 5 workouts can be scrolled through and viewed by pressing the **WORKOUT STATS** key:
   - Time – total time of selected workout
   - Distance – total distance of selected workout
   - Calories – total calories burned during selected workout
   - Pace – average pace during selected workout
   - Elevation Gain (feet) – total elevation climbed, in feet, during selected workout

3) **WORKOUT TOTALS:** allows you to view the total accumulated workout data. Pressing the **WORKOUT TOTALS** key will allow you to scroll through the following totals:
   - Total Workouts
   - Total Distance
   - Total Calories
   - Total Time
   - Elevation Gain – total elevation climbed in feet

USING YOUR MEDIA PLAYER

1) Connect the included AUDIO ADAPTOR CABLE to the AUDIO IN JACK on the left of the console and the headphone jack on your media player.
2) Use your media player buttons to adjust song settings.
3) Remove the AUDIO ADAPTOR CABLE when not in use.

ENERGY SAVER (STANDBY MODE)

This machine has a special feature called Energy Saver™ mode. This mode is NOT automatically activated. When Energy Saver mode is activated, the display will automatically enter standby mode (Energy Saver mode) after 15 minutes of inactivity. This feature saves energy by disabling most power to the machine until a key is pressed on the console. This feature can be turned on or off in the engineering menu.

To enter the engineering menu, press and hold the + **INCLINE** key and **– SPEED** key for 3-5 seconds. Use the **– / +** keys to navigate through the menu to ENG3. Press **ENTER** to select. Use **– / +** keys to select ENRGY SVE ON or OFF. Press and hold **STOP** for 3-5 seconds to exit ENG3. Press and hold **STOP** again for 3-5 seconds to exit the engineering menu.

AFG14_OM_3.3AT_Rev1_2.indd 26-27 7/31/14 4:41 PM

LIMITED HOME-USE WARRANTY

AFG14_OM_3.3AT_Rev1_2.indd 28-29 7/31/14 4:41 PM

WEIGHT CAPACITY = 325 lbs (147 kilograms)

FRAME = LIFETIME

Warranty on the frame against defects in workmanship and materials for a lifetime period of the buyer from the date of purchase, so long as the device remains in the possession of the original owner. (The frame is defined as the welded metal base of the unit and does not included any parts that can be removed.)

DRIVE MOTOR/ELEVATION MOTOR = LIFETIME

Warranty on the drive/elevation motors against defects in workmanship and materials for a lifetime period of the buyer from the date of purchase, so long as the device remains in the possession of the original owner. Labor or installation of motor is not covered under the motor warranty.

ELECTRONICS & PARTS = 3 YEARS

Warranty on the electronic components, finish and all original parts for the period specified above from the date of original purchase, so long as the device remains in the possession of the original owner.

LABOR = 1 YEAR

Warranty shall cover the labor cost for the repair of the device for the period specified above from the date of the original purchase, so long as the device remains in the possession of the original owner.

EXCLUSIONS AND LIMITATIONS

Who IS covered:

- The original owner and is not transferable.

What IS covered:

- Repair or replacement of a defective motor, electronic component, or defective part and is the sole remedy of the warranty.

What IS NOT covered:

- Normal wear and tear, improper assembly or maintenance, or installation of parts or accessories not originally intended or compatible with the equipment as sold.
- Damage or failure due to accident, abuse, corrosion, discoloration of paint or plastic, neglect, theft, vandalism, fire, flood, wind, lightning, freezing, or other natural disasters of any kind, power reduction, fluctuation or failure from whatever cause, unusual atmospheric conditions, collision, introduction of foreign objects into the covered unit, or modifications that are unauthorized or not recommended by the manufacturer.
- Incidental or consequential damages. The manufacturer is not responsible or liable for indirect, special or consequential damages, economic loss, loss of property, or profits, loss of enjoyment or use, or other consequential damages of whatsoever nature in connection with the purchase, use, repair or maintenance of the equipment. The manufacturer does not provide monetary or other compensation for any such repairs or replacement parts costs, including but not limited to gym membership fees, work time lost, diagnostic visits, maintenance visits or transportation.
- Equipment used for commercial purposes or any use other than a single family or Household, unless endorsed by the manufacturer for coverage.
- Equipment owned or operated outside the US and Canada.
- Delivery, assembly, installation, setup for original or replacement units or labor or other costs associated with removal or replacement of the covered unit.
- Any attempt to repair this equipment creates a risk of injury. The manufacturer is not responsible or liable for any damage, loss or liability arising from any personal injury incurred during the course of, or as a result of any repair or attempted repair of your fitness equipment by other than an authorized service technician. All repairs attempted by you on your fitness equipment are undertaken AT YOUR OWN RISK and the manufacturer shall have no liability for any injury to the person or property arising from such repairs.
- If you are out of the manufacturer's warranty but have an extended warranty, refer to your extended warranty contract for contact information regarding requests for extended warranty service or repair.

SERVICE/RETURNS

- In-home service is available within 150 miles of the nearest authorized Service Provider (Mileage beyond 150 miles from an authorized service center is the responsibility of the consumer).
- All returns must be pre-authorized by the manufacturer.
- The manufacturer's obligation under this warranty is limited to replacing or repairing, at the manufacturer's option, the same or comparable model.
- The manufacturer may request defective components be returned to the manufacturer upon completion of warranty service using a prepaid return shipping label. If you have been advised to return parts and did not receive a label, please contact Customer Tech Support.
- Replacement units, parts and electronic components reconditioned to as-new condition by the manufacturer or its vendors may sometimes be supplied as warranty replacement and constitute fulfillment of warranty terms.
- This warranty gives you specific legal rights, and your rights may vary from state to state.

AFG14_OM_3.3AT_Rev1_2.indd 30-31 7/31/14 4:41 PM

STOP CUSTOMER TECH SUPPORT

DO NOT RETURN TO THE RETAILER if you have any problems during assembly or if parts are missing.

For fast and friendly service, please contact one of our trained customer technicians via phone, email or our website.

We want to know if you have a problem and we want to have an opportunity to correct it for you.

NOTE: Please read the TROUBLESHOOTING section in the TREADMILL GUIDE before contacting Customer Tech Support. Additional product information is available on our website.

ATTENTION SOUTIEN TECHNIQUE À LA CLIENTÈLE

NE PAS RETOURNER L'APPAREIL AU DÉTAILLANT en cas de difficulté lors de l'assemblage ou si des pièces manquent.

Pour obtenir un service rapide et amical, communiquer avec un de nos techniciens d'expérience par téléphone, par courriel ou par notre site Web.

Nous voulons savoir si vous avez un problème et nous voulons avoir l'occasion de le résoudre pour vous.

REMARQUE : lire la section DÉPANNAGE dans le GUIDE DU TAPIS ROULANT avant de communiquer avec le service de soutien technique à la clientèle . Des renseignements supplémentaires sur le produit sont disponibles sur notre site Web.

¡ALTO! SERVICIO DE ASISTENCIA TÉCNICA A CLIENTES

Si tiene problemas durante el ensamblaje o si le faltan piezas, **NO DEVUELVA ESTE APARATO AL VENDEDOR MINORISTA**.

Para obtener un servicio rápido y grato, comuníquese con uno de nuestros técnicos capacitados para la atención de clientes vía teléfono, correo electrónico o nuestro sitio web.

Nos interesa saber si usted tiene algún problema y queremos tener la oportunidad de corregirlo para usted.

NOTA: Lea la sección de RESOLUCIÓN DE PROBLEMAS en la GUÍA DE LA BICICLETA ESTACIONARIA antes de comunicarse con el servicio de asistencia técnica a clientes. En nuestro sitio web hay información adicional sobre el producto.

US:
1-855-396-2524
ctsupport@advancedfitnessgroup.com

Servicio en Mexico : Gimpack SA de CV.
Tels (5255) 56706418 ext 820, 821, 822, 823, 824. 01(800) 288 2556
servicioclientes@gimpack.com.mx

Advanced Fitness Group
1600 Landmark Drive,
Cottage Grove WI, 53527

See our troubleshooting and maintenance videos online at:
Veuillez regarder les vidéos de dépannage et de maintien sur le net au:
Miren los videos de localización y resolución de problemas y el mantenimiento por internet al:

www.youtube.com/AdvancedFitnessGroup

3.3AT Rev. 1.2 | © 2014 Johnson Health Tech

Designed & Engineered in the U.S.A. • Made in China
Conçu et fabriqué aux États-Unis. • Fabriqué en Chine
Diseñado y fabricado en EE. UU. • Hecho en China