LG
Life's Good

ENGLISH

OWNER'S MANUAL

DISHWASHER

Read this owner's manual thoroughly before operating the appliance and keep it handy for reference at all times.

LDT779#** LDP679#**

LDP567#** LDT566#**

LDF554#**

MFL69261715
Rev.00_112816

www.lg.com

TABLE OF CONTENTS

3 PRODUCT FEATURES

4 SAFETY INSTRUCTIONS

4 IMPORTANT SAFETY INSTRUCTIONS

9 PRODUCT OVERVIEW

9 Exterior Parts
10 Interior Parts
10 Accessories

11 INSTALLATION

11 Installation Parts and Tools
12 Installation Overview
12 Product Dimensions
12 Product Specifications
13 Preparing Cabinet Opening
14 Preparing Electrical Wiring
14 Preparing Water Supply Connection
15 Preparing Dishwasher
16 Sliding Dishwasher into Cabinet
17 Leveling the Appliance
18 Securing Dishwasher to Countertop
18 Connecting Drain Hose
20 Connecting Water Supply
20 Connecting Power
21 Final Check

22 OPERATION

22 Using the Appliance
23 Control Panel
24 Cycles
25 Options
26 Cycle/Option Guide
27 Loading the Dishwasher
27 Loading the Lower Rack
29 Loading the Silverware Basket
30 Loading the Upper Rack
33 Loading the Cutlery Rack (On Some Models)
35 Adding Cleaning Agents

37 SMART FUNCTIONS

37 Application Installation
37 Product Registration
37 Using the Tag On Function
38 Using the Wi-Fi Function
40 Using Smart Diagnosis™

41 MAINTENANCE

41 Cleaning the Exterior
41 Cleaning the Interior
41 Seasonal Maintenance and Storage
42 Clogged Drain Air Gap or In-Sink Disposal
43 Cleaning the Filters
44 Cleaning the Spray Arms

45 TROUBLESHOOTING

45 FAQs: Frequently Asked Questions
47 User Support Videos
48 Before Calling for Service

51 WARRANTY

PRODUCT FEATURES

QuadWash™ System

Multi-Motion lower spray arm shoots water in various directions and at optimized intensities to reach every area of the tub. This system provides more powerful and complete cleaning coverage.

Inverter Direct Drive Motor

LG's experience in motor technology results in extraordinary functionality, with advanced features like the Dual Zone option, whisper-quiet operation, energy efficiency, and durability.
The simple design and high build quality of the motor make it so reliable that it's covered for 10 years under the warranty.

EasyRack Plus

This easy-to-use system of adjustable tines and rack height provides more flexibility and versatility when loading dishes of various shapes and sizes.

Hybrid Drying System

This efficient drying system does not use a heating element during the drying process resulting in superior energy efficiency and gentle care for dishes.

Smart ThinQ™

Download the new LG smart phone app to set options, self-diagnose and troubleshoot problems with the appliance, and other useful features. Some of these functions use Wi-Fi or NFC (Near Field Communication) technology and require an NFC-equipped smart phone.

SAFETY INSTRUCTIONS

READ ALL INSTRUCTIONS BEFORE USE

Your safety and the safety of others are very important.

We have provided many important safety messages in this manual and on your appliance. Always read and follow all safety messages.

This is the safety alert symbol.
This symbol alerts you to potential hazards that can kill or injure you and others.
All safety messages will follow the safety alert symbol and either the word WARNING or CAUTION.

These words mean:

WARNING

You may be killed or seriously injured if you do not follow instructions.

CAUTION

You may be slightly injured or cause damage to the product if you do not follow instructions.

All safety messages will tell you what the potential hazard is, tell you how to reduce the chance of injury, and tell you what may happen if the instructions are not followed.

IMPORTANT SAFETY INSTRUCTIONS

WARNING

To reduce the risk of explosion, fire, death, electric shock, scalding or injury to persons when using this product, follow basic precautions, including the following:

California Safe Drinking Water and Toxic Enforcement Act

- This product contains chemicals known to the state of California to cause cancer and birth defects or other reproductive harm. ***Wash hands after handling.***

INSTALLATION

- Connect to a properly rated, protected, and sized power circuit to avoid electrical overload.
- To reduce the risk of severe injury or death, follow all installation instructions.
- The appliance must be installed and electrically grounded by qualified service personnel in accordance with local codes.
- Disconnect the power supply line, house fuse or circuit breaker before installing or servicing the appliance.
- When moving or installing the product in a different location, call qualified service personnel for installation and service.
- Keep packing materials out of the reach of children. Packaging material can be dangerous for children. There is a risk of suffocation.
- Moving or installation of the appliance requires two or more people.
- This appliance is not designed for maritime use or for mobile installations such as in RVs, trailers, or aircraft.

- Store and install the appliance where it will not be exposed to temperatures below freezing or exposed to outdoor weather conditions.
- This appliance must be positioned near to an electrical power supply.
- Do not, under any circumstances, cut or remove the ground from the power supply line.
- When installing or moving the appliance, be careful not to pinch, crush, or damage the power supply line.
- Do not install the appliance in humid spaces.
- Destroy the carton, plastic bag, and other packing materials after the appliance is unpacked. Children might use them for play. Cartons covered with rugs, bedspreads, or plastic sheets can become airtight chambers.
- Never attempt to operate this appliance if it is damaged, malfunctioning, partially disassembled, or has missing or broken parts, including a damaged power supply line.
- Adhere to all industry recommended safety procedures including the use of long sleeved gloves and safety glasses.
- The installer must ensure that the dishwasher is completely enclosed at the time of installation.
- Use new hoses when connecting the appliance to the water supply. Do not reuse old hoses.
- After installing, check the hose connection for leaks.
- Do not damage or place heavy items on the power supply line of the appliance.

OPERATION

- Repair or immediately replace all power supply lines that have become frayed or otherwise damaged. Do not use a power supply line that shows cracks or abrasion damage along its length or at either end.
- If you detect a strange sound, a chemical or burning smell, or smoke coming from the appliance, unplug it immediately, and contact an LG Electronics customer information center.
- Never unplug the appliance by pulling on the power supply line.
- Do not use an extension cable or adapter with this appliance.
- Do not grasp the power supply line or touch the appliance controls with wet hands.
- Do not modify or extend the power cable.
- If the product has been submerged, contact an LG Electronics customer information center for instructions before resuming use.
- Do not store or use gasoline or other flammable vapors and liquids in the vicinity of this or any other appliance.
- Keep the area underneath and around your appliances free of combustible materials (lint, paper, rags, etc.), gasoline, chemicals and other flammable vapors and liquids.
- This appliance is not intended for use by persons (including children) with reduced physical, sensory or mental capabilities, or lack of experience and knowledge, unless they have been given supervision or instruction concerning the use of the appliance by a person responsible for their safety.
- If the electrical supply line is damaged, it must only be replaced by the manufacturer or its service agent or a similar qualified person in order to avoid a hazard.
- Do not abuse, sit on, or stand on the door of the appliance.
- Read all instructions before using the appliance and save these instructions.
- Use this appliance only for its intended purpose.

- Do not allow children to play on, in or with the appliance. Close supervision of children is necessary when the appliance is used near children.
- Do not tamper with controls.
- In the event of a gas leak (propane gas, LP gas, etc.) do not operate this or any other appliance. Open a window or door to ventilate the area immediately.
- Under certain conditions, hydrogen gas may be produced in a hot-water system that has not been used for two weeks or more. HYDROGEN GAS IS EXPLOSIVE. If the hot-water system has not been used for such a period, before using the appliance turn on all hot water faucets and let the water flow from each for several minutes. This will release any accumulated hydrogen gas. As the gas is flammable, do not smoke or use an open flame during this time.
- Fix the drain hose securely in place.
- Use only detergents or wetting agents recommended for use in a dishwasher and keep them out of the reach of children.
- Do not let children eat detergent or dishwasher rinse agent.
- When loading items to be washed:
  - Locate sharp items so that they are not likely to damage the door seal.
  - Load sharp knives with the handles up to reduce the risk of cut-type injuries.
- Do not wash plastic items unless they are marked "dishwasher safe" or the equivalent. For plastic items not so marked, check the manufacturer’s recommendations.
- Do not touch the HEATING ELEMENT during or immediately after use.
- Do not operate your dishwasher unless all ENCLOSURE panels are properly in place.
- Do not abuse, sit on, or stand on the door or dish rack of the dishwasher.
- Do not install or store the dishwasher where it will be exposed to weather conditions.
- After cleaning the dishes, turn off the faucet. Turn on the faucet again and check the connection status of water supply hose before cleaning.
- Do not open the door while operating. For safety reasons, the drain pump operates if the door is opened, resulting in a longer cycle time.
- Be careful not to catch your hand when closing the door of the product.
- Do not plug the dishwasher into a damaged outlet.
- Do not install or keep the dishwasher near electrical components or exposed flames.
- Do not wash dishes exposed to gasoline, solvents or other flammable materials.
- When cleaning, do not spray water on the product directly.
- Do not press buttons with a sharp object such as an awl or pin.
- Do not use solvent-based detergent.
- Do not come into contact with the steam outlet.
- Small parts, such as rack clips and filter retaining posts can be a choke hazard to small children if removed from the dishwasher. Keep out of reach of small children.

MAINTENANCE

- Do not repair or replace any part of the appliance. All repairs and servicing must be performed by qualified service personnel unless specifically recommended in this Owner's Manual. Use only authorized factory parts.
- Do not disassemble or repair the appliance by yourself.
- Remove any dust or foreign matter from the power supply line.
- Disconnect this appliance from the power supply before cleaning and attempting any user maintenance. Turning the controls to the OFF position does not disconnect this appliance from the power supply.
- Remove the door before the appliance is removed from service or discarded to avoid the danger of children or small animals getting trapped inside.
- Unplug the appliance before cleaning to avoid the risk of electric shock.
- Before discarding the appliance, cut off the power supply line and destroy the appliance's control panel.

GROUNDING INSTRUCTIONS

- For a permanently connected dishwasher: This appliance must be connected to a grounded metal, permanent wiring system, or an equipment-grounding conductor must be run with the circuit conductors and connected to the equipment-grounding terminal or lead to the appliance.
- Connect the ground wire to the green ground connector in the terminal box.

TIP OVER HAZARD

- Do not use the dishwasher until completely installed.
- Do not push down on the open dishwasher door.
- Failure to follow these instructions may result in serious injury or cuts.

SAVE THESE INSTRUCTIONS

⚠ CAUTION

To reduce the risk of minor injury to persons, malfunction, or damage to the product or property when using this product, follow basic precautions, including the following:

INSTALLATION

- Install the product on a firm and level floor.
- This dishwasher must be connected to a hot water supply with a temperature range between 120 °F (49 °C) and 149 °F (65 °C). This temperature range provides the best washing results and shortest cycle time. The temperature should not exceed 149°F (65 °C) to prevent damage to dishes.
- Do not put the drain hose under the dishwasher during installation.

OPERATION

- Do not place objects on top of the appliance.
- Turn off the water faucets and unplug the appliance if the appliance is to be left for an extended period of time, such as during vacations.
- Do not store or spill liquid detergents, cleaners, or bleaches (chlorine bleach, oxygen bleach) on the appliance. Doing so may result in corrosion, discoloration or damage to the surface of the appliance.
- Do not touch draining water which may be hot.
- If the drain hose and the water supply hose are frozen in winter, defrost before using the appliance.
- Do not put hands, feet, or metal objects below or behind the appliance.
- Do not put the drain hose under the dishwasher during installation.

PRODUCT OVERVIEW

Exterior Parts

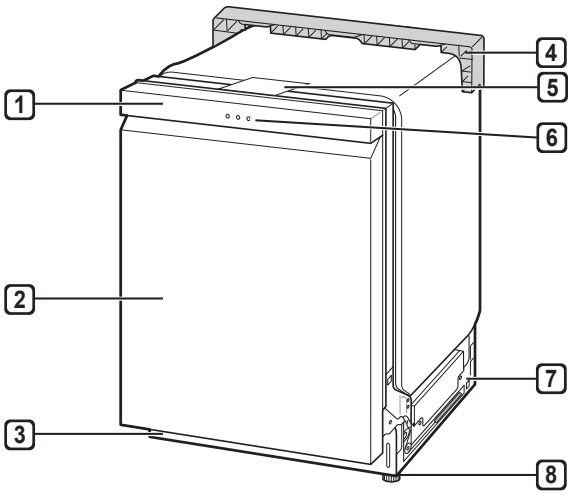

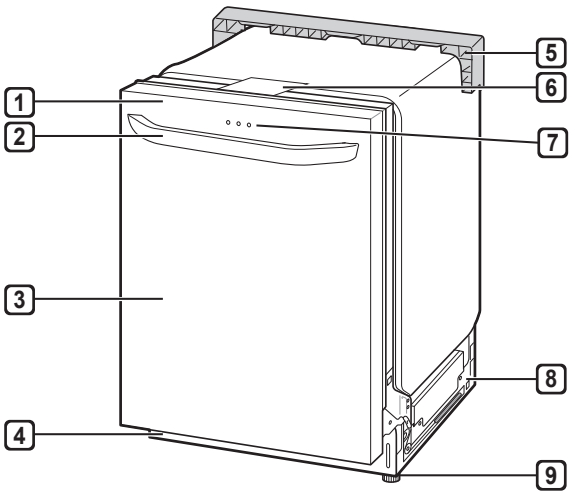

1 Control Panel & Door Handle

2 Front Cover

3 Lower Cover

4 Shipping Brace

5 Safety Cover

6 Signal Light (some models)

7 Base

8 Leveling Feet

1 Control Panel

2 Door Handle

3 Front Cover

4 Lower Cover

5 Shipping Brace

6 Safety Cover

7 Signal Light (some models)

8 Base

9 Leveling Feet

NOTE

- Do not remove the safety cover at any time.

Signal Light (Front Display)

The top-control models have 3 indicator LEDs centered at the top of the front cover.

- Red : Error (See the Error Codes in Troubleshooting section.)
- White (steady): Normal operation
- White (blinking): Cycle has been paused. (After four minutes in pause mode, the machine turns off.)
- Green: Cycle finished normally.

The green light stays on for 90 seconds.

To keep the green light on until the door is opened, turn the power on, and then press and hold **High Temp** on the control panel for 3 seconds until OFF or On appears in the display. The dishwasher remembers this setting until manually changed.

Interior Parts

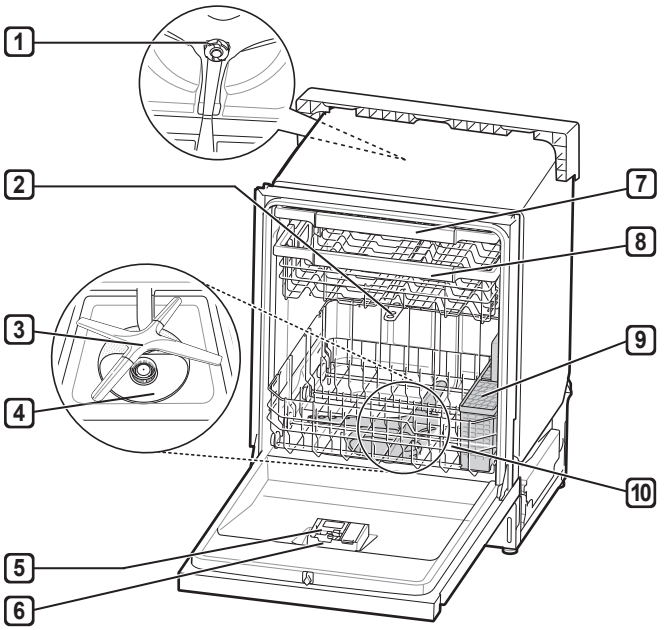

1 Top Wash Impeller

2 Upper Spray Arm

3 Lower Spray Arm

4 Filtration System

5 Detergent and Rinse Aid Dispenser

6 Drying Vent Cover

7 Cutlery Rack (some models)

8 Upper Rack

9 Silverware Basket

10 Lower Rack

NOTE

- The silverware basket ships installed at the back of the bottom rack. For best performance, install it along the right side as shown in the Interior Parts section.
- Remove all packing materials from the exterior and interior of the dishwasher before installing the appliance.

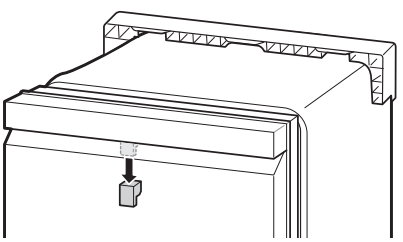

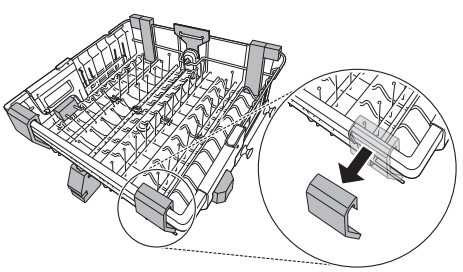

Accessories

Included Accessories

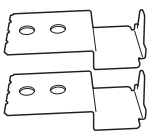

Installation brackets (2ea)

Wood screws (4ea)

Hose clamp (1ea)

INSTALLATION

Installation Parts and Tools

Parts not Provided

Electrical cable

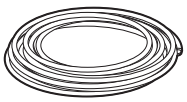
Water supply tube

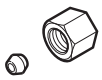
Fittings for tube

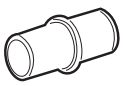
Coupler

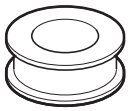
Teflon™ tape

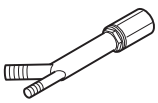
Air gap

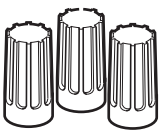
Wire nuts for 16-gauge wiring

Hose clamp

⅞" UL approved strain relief

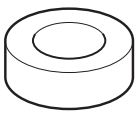
Electrical tape

Tools Needed

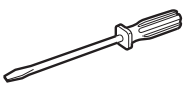
Flat-blade screwdriver

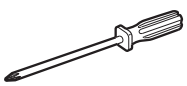
Phillips screwdriver

Hole saw min. 2½" bit

Electrical drill

Gloves

Safety glasses

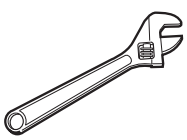
Adjustable wrench

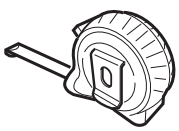
Tape measure

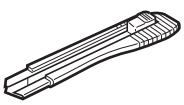
Utility knife

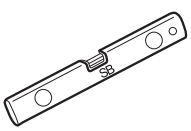
Level

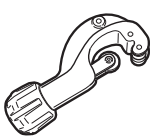
Tubing cutter

Nipper

Pliers

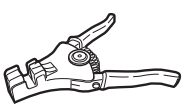
Wire stripper

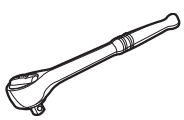
¼" Square drive wrench

Installation Overview

Preparing Cabinet Opening
Preparing Electrical Wiring
Preparing Water Supply Connection
Preparing the Dishwasher
Removing Lower Cover
Sliding the Dishwasher into Cabinet
Leveling the Dishwasher
Securing the Dishwasher to Countertop
Connecting the Drain Hose
Connecting Water Supply
Connecting Power
Final Check

Product Dimensions

Back view

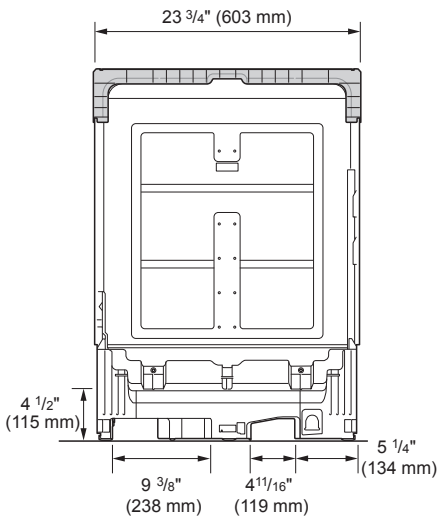

Side view

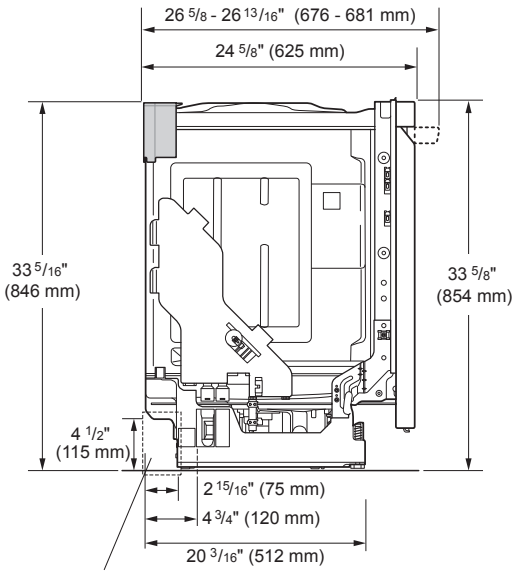

Water supply hose, drain hose and electric cable should be passed through this area.

NOTE

- For easiest installation, see marked areas above for water and electrical clearances in base of dishwasher.

Product Specifications

The appearance and specifications listed in this manual may vary due to constant product improvements.

Electrical requirement	120 V, 60 Hz AC only, minimum 15 A circuit breaker
Water pressure	20 - 80 psi (140 - 550 kPa)
Dimensions	23 3/4"(W) X 24 5/8"(D) X 33 5/8"(H) 603 mm(W) X 625 mm(D) X 854 mm(H)
Inlet water temperature	120 °F (49 °C) minimum, 149 °F (65 °C) maximum
Net weight	72 - 82 lbs. (33 - 37 kg)

Preparing Cabinet Opening

This dishwasher is designed to fit a standard dishwasher opening. An opening may be needed on both sides to route plumbing and electrical connections.

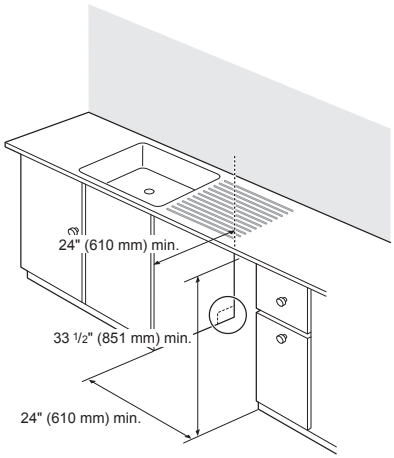

1 Select a location as close to the sink as possible for easy connections to water and drain lines.

2 To ensure proper drainage, install the dishwasher no more than 12 ft. (3.65 m) from the sink.

3 If installing the dishwasher in a corner, leave a minimum of 2" (50 mm) between the dishwasher and the adjacent wall.

4 To allow for proper clearance of plumbing and electrical, use the template included with the literature to determine the clearance on the side of the cabinet where the cabinet meets the back wall. Using a 2 1/2" diameter hole saw, drill a hole in the target area as shown on the template.

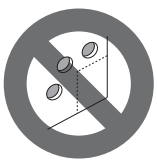

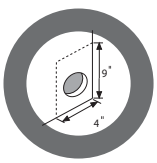

⚠ WARNING

- Don't use existing holes unless they are in the target area. Otherwise, the water supply and drain hose may be damaged by being crushed or kinked.

⚠ CAUTION

- Failure to properly locate the hole for the water and drain lines may prevent the dishwasher from installing flush with the cabinets and could result in kinked or damaged lines. Installation damage is not covered by the warranty, and leaks caused by improper installation may result in property damage.

For flush installations only, you may remove the cabinet brace inside the cabinet.

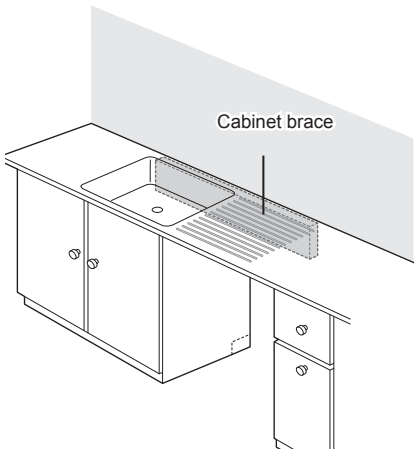

Preparing Electrical Wiring

1 Operate this appliance with the correct voltage as shown in this manual and on the rating plate. Connect it to a dedicated, properly grounded branch circuit which is protected by a time delay fuse. Connect the appliance using 3-wires, including a ground wire.

2 If an outlet and other power connector are used, it should be in an accessible location adjacent to and not behind the dishwasher and within 4 ft (1.2 m) of the dishwasher's side.

3 The wiring must be grounded properly. If in doubt, have it checked by a qualified electrician. Do not connect any other appliance to the same outlet.

4 Route the wiring.

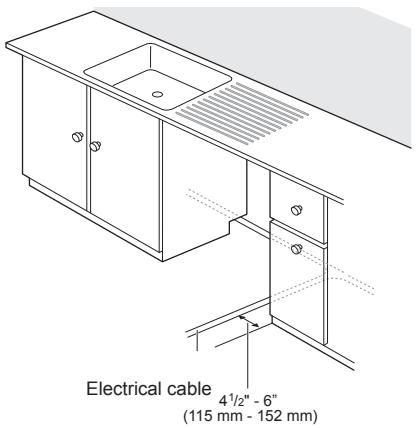

5 Make sure the electrical cable is oriented in the right side channel.

⚠ WARNING

- For personal safety, remove house fuse or open circuit breaker before installation.
- Do not use an extension cable or adapter with this dishwasher.

NOTE

- If you find any damage to the dishwasher, contact your retailer or contractor.
- The included wire nut in 16AWG should be used.

Preparing Water Supply Connection

Make sure the house water supply is turned off before connecting the dishwasher water lines.

1 Connect the dishwasher to a hot water supply with a temperature range between 120 °F (49 °C) and 149 °F (65 °C). This temperature range provides the best washing results and shortest cycle time. To prevent damage to dishes, the temperature should not exceed 149 °F (65 °C).

2 When connecting the dishwasher water line, sealing tape or compound should be used on pipe threads to avoid leaks. Tape or compound should not be used on compression fittings.

3 The water supply tube must be located in the left side channel.

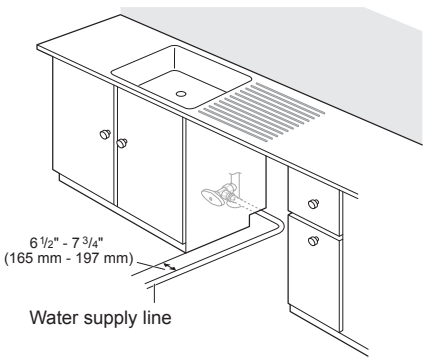

NOTE

- Use new hoses when connecting to the water supply. Do not reuse old hoses.

Preparing Dishwasher

Removable Rear Plastic Shipping Brace

The rear shipping brace can be removed if additional clearance is needed when installing the dishwasher under a low countertop.

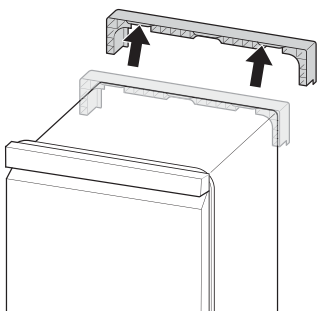

NOTE

- Do not pull or lift the dishwasher using the handle; doing so can damage the door and hinges. Open the door and grab the body frame and the top front opening of the tub to move or lift the dishwasher.

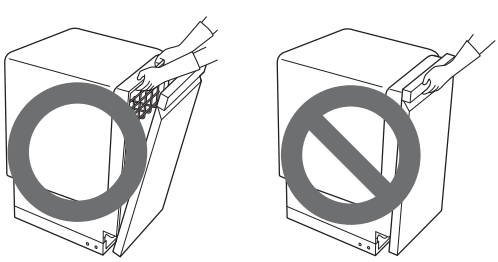

NOTE

- Do not push the door of the dishwasher with knees.

Removing Lower Cover

1. Remove the two screws attaching the lower cover to the dishwasher.
2. Remove the lower cover from the base.
3. Remove the insulation pad from behind the access panel.

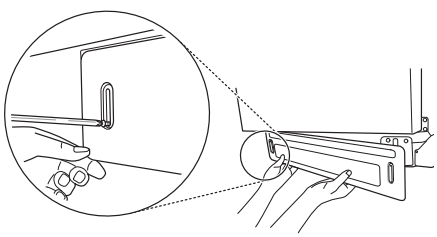

⚠ CAUTION

- If at any time the dishwasher is laid on its back, take care not to damage the drain hose.

NOTE

- Make sure that the lower cover replaces in the last step.

Attaching Mounting Hardware

For countertops made of wood or other material that will not be damaged by drilling, use the metal installation brackets.

1 Insert the installation brackets into the slots in the upper frame.

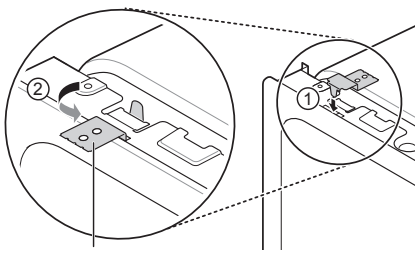

Installation bracket

2 Bend the brackets to secure them to the dishwasher tub.

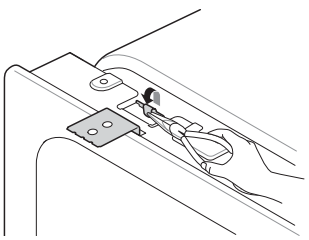

NOTE

- Installation brackets and screws can be found in the silverware basket.

For countertops made of granite, marble, or other materials that could be damaged by drilling, use the wood screws to attach the dishwasher to the cabinet. See installation instructions in Securing Dishwasher to Countertop.

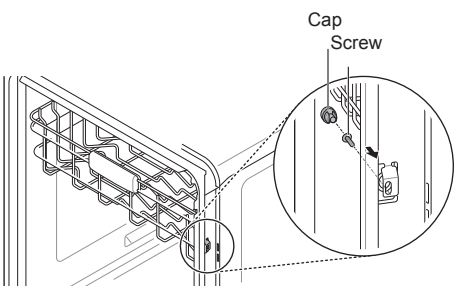

Sliding Dishwasher into Cabinet

1 Slide the dishwasher carefully into the cabinet opening.

2 Make sure the drain hose inside the cabinet is not kinked or pinched.

3 Make sure the water supply line and electrical supply are routed through the channels under the dishwasher.

4 To avoid a kinked or pinched drain hose, be sure to pull on the drain hose while sliding the dishwasher into place. Do not allow any slack behind the dishwasher.

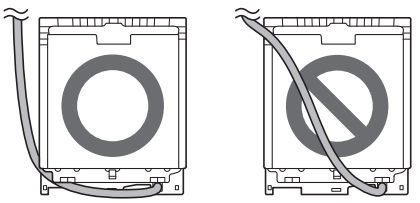

5 After leveling the dishwasher, do not leave the water supply line or power supply line under the base. This is a potential cause of water leaks. Place the water line and power supply line in the channel.

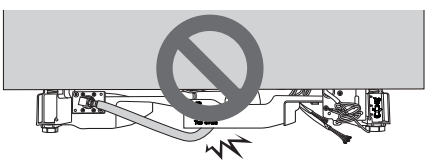

Leveling the Appliance

Check that dishwasher is level.

- Attach level on top front opening of tub from side to side.
- Attach level on front side of tub.

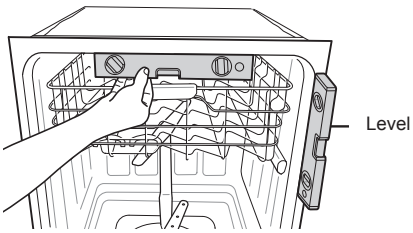

Make sure that the gap between the door and the tub is equal on both the left and right sides.

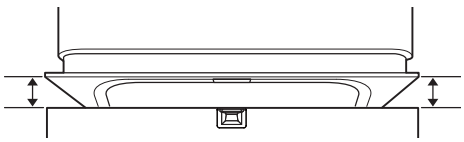

The water level should be checked after the initial fill on the Normal cycle. If the water level is not near the center of both tub lower indentations, the dishwasher may not be correctly leveled. The dishwasher may leak during operation if it is not correctly leveled.

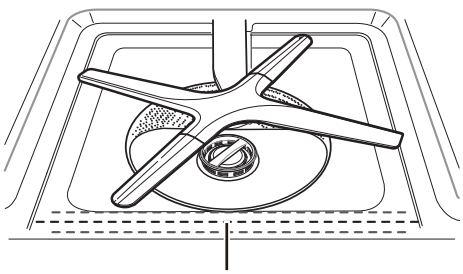

Water level should be near the center of both tub lower indentations.

Adjusting the Legs

Adjusting the Front Legs

- Use a flat-blade screwdriver or a pliers to turn the front legs and adjust the front of the tub.
- Turn the front legs clockwise to raise the front of the tub and counter-clockwise to lower it.
- The adjustments work identically for both front legs.

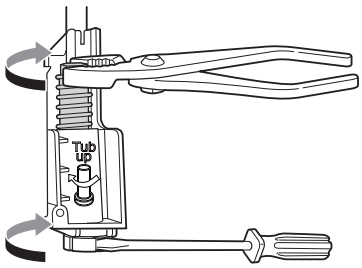

Adjusting the Rear Legs

- Use a Phillips screwdriver to adjust the back legs and the rear of the tub using the center screw at the base of the appliance in the front.
- Turn the center screw clockwise to raise the rear of the tub and counter-clockwise to lower it.

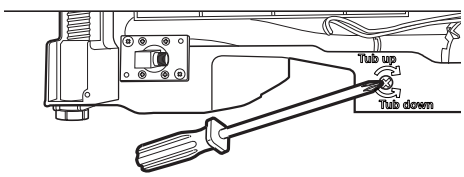

NOTE

- To avoid damaging the screw, do not use an electric screwdriver.

Securing Dishwasher to Countertop

For countertops made of wood or other material that will not be damaged by drilling, use Method 1.

For countertops made of granite, marble, or other materials that could be damaged by drilling, use Method 2.

NOTE

- Cover the filter hole with towels to prevent screws from falling down into the pump.
- Use a magnetic screwdriver.

Method 1

Using the provided screws, secure the dishwasher to the countertop through the holes in the bracket.

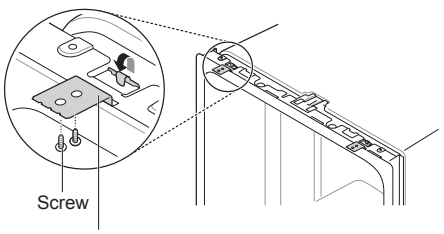

NOTE

- Installation brackets and screws can be found in the silverware basket. See Attaching Mounting Hardware section for more information on attaching installation brackets to dishwasher.

Method 2

1. Remove the plastic caps from the mounting bracket access holes.
2. Drive a wood screw through the mounting bracket and into the cabinet frame.
3. Reinstall the plastic caps.

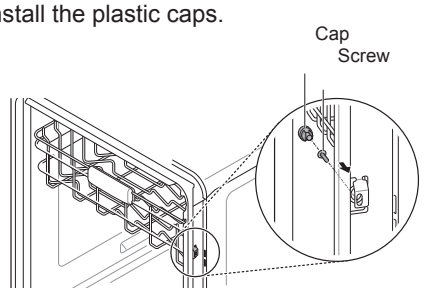

Connecting Drain Hose

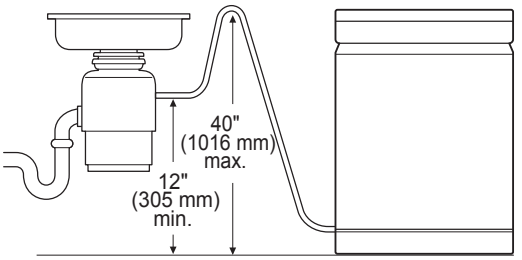

If the end of the drain hose does not fit the drain line, use a heat and detergent resistant adapter (not supplied). These may be obtained from a local plumbing supply store.

The two typical connections are shown. To prevent siphoning, one of the following connections should be used.

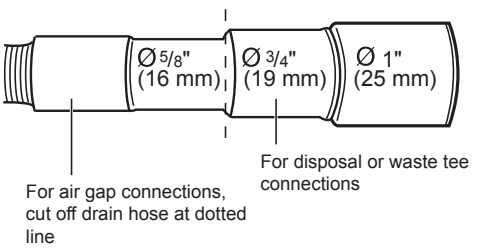

Drain Requirements

- Follow local codes and ordinances.
- Do not exceed 12 ft. (3.65 m) distance to drain.
- Do not connect drain lines from other devices to the dishwasher drain hose.
- If an extension drain hose is required, use 5/8" or 7/8" inside diameter, 2-3 ft. length hose and a coupler for connecting the two hose ends.

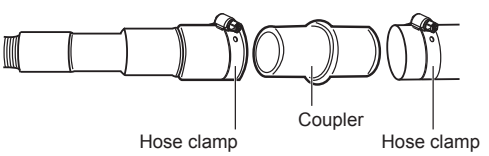

NOTE

- For drain hose installation, use the screw style clamp provided with this dishwasher in the silverware basket.

NOTE

- If the knockout plug has not been removed, the dishwasher will not be able to drain properly.

Connecting to Disposal with No Air Gap

1 Remove the knockout plug with a hammer and screwdriver.

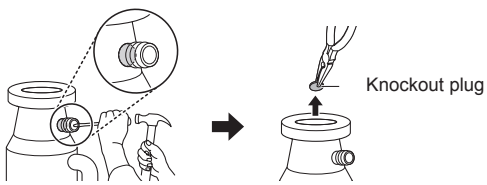

2 Attach the drain hose to disposal with the hose clamp provided. Move into position and tighten the hose clamp.

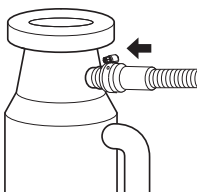

Connecting Waste Tee with No Air Gap

1 Remove the knockout plug with a hammer and screwdriver.

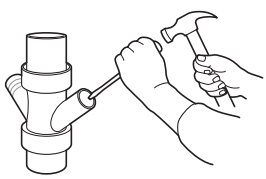

2 Attach the drain hose to waste tee with the hose clamp provided. Move into position and tighten the hose clamp.

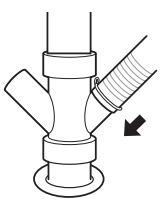

Connecting to Disposal or Waste Tee with Air Gap

1 Remove the knockout plug with a hammer and screwdriver.

2 Connect end of the drain hose to the air gap with hose clamp provided. This avoids water being siphoned from the tub.

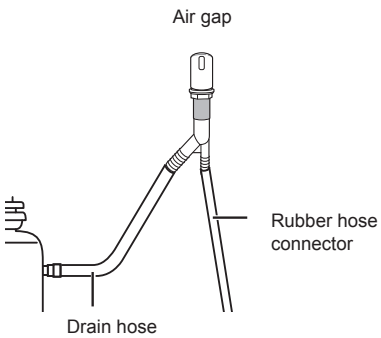

3 Attach the rubber connector to disposal or waste tee with the hose clamp provided. Move into position and tighten the hose clamp.

Connecting without Air Gap

The height of the drain hose end must be at least 12" (305 mm) and within 40" (1016 mm) from the base of the appliance to avoid water being siphoned from the tub.

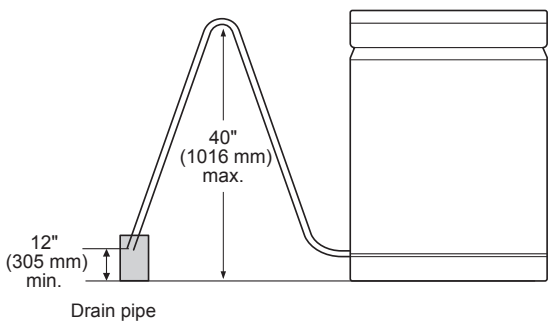

Connecting Water Supply

1 Before connecting, turn off the water supply.

2 Slide the flexible stainless-steel water line or copper tube into the elbow.

3 Tighten the compression nut and make sure that the line is not kinked or pinched.

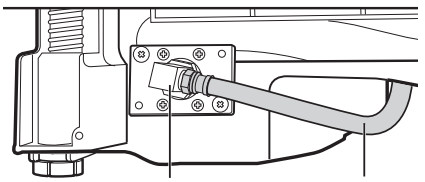

NOTE

- During the final installation check of the dishwasher, an IE error code may appear on the display. Make sure the water line is not kinked and the water supply for the dishwasher has been turned on before calling for service.

Connecting Power

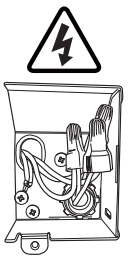

NOTE

- The best location for the electrical conduit is on the right side of the back wall. Re-route the power cable before installation if the electrical conduit pipe is longer than 3" (76 mm) and is centered on the back wall.

1 Before beginning, turn off electrical power to the unit at the circuit breaker.

2 Remove the junction box cover and then install the strain relief.

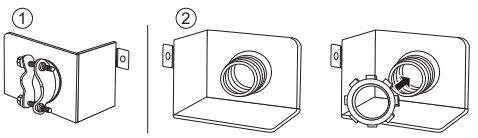

3 Twist the wire nuts tightly onto the wires; then wrap each connection with electrical tape.

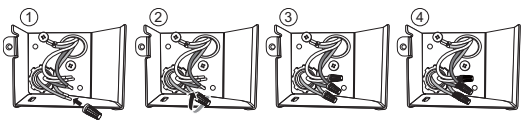

4 Check again and make sure that all wires are connected correctly: black to black, white to white, green ground wire to green ground wire.

5 Replace the junction box cover.

⚠ WARNING

- Verify that the black wire is hot (120 V). If not, or if you are unsure of the power supply, have it checked by a licensed electrician.

⚠ CAUTION

- Do not leave stripped wire exposed. Trim stripped wire to fit completely inside wire nuts.

Final Check

1 Turn on electrical power.

2 Turn on house water supply.

3 Make sure the door opens and closes smoothly. If necessary, level the dishwasher again.

4 Run the dishwasher on a Turbo cycle to verify proper operation and check for leaks.

⚠ CAUTION

- Only install the lower cover provided with the machine. Do not install cabinet baseboard as it may cause noise and leakage.

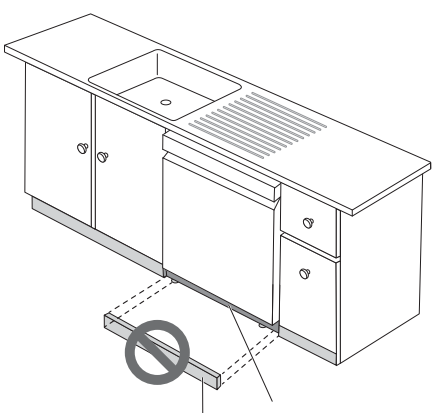

Error Code	Possible Cause and Solution
OE Error	**Drain hose kinked or pinched.** Feed the drainage and supply hoses through the hole under the sink. Then gradually slide the dishwasher into the cabinet while pulling on the hoses under the sink to take up any slack. This helps avoid kinking the hoses or trapping them beneath the dishwasher.
	Drain hose connected to disposal. Remove knockout plug on disposal.
	Waste tee is clogged. Remove knockout plug on waste tee.
IE Error	**Water supply line kinked under dishwasher.** Feed the drainage and supply hoses through the hole under the sink. Then gradually slide the dishwasher into the cabinet while pulling on the hoses under the sink to take up any slack. This helps avoid kinking the hoses or trapping them beneath the dishwasher.
	House water supply not turned on. Turn water on.

OPERATION

Using the Appliance

Before Using the Appliance

- Read the Important Safety Instructions.
- Connect to the hot water supply only. The water supply temperature should be a minimum of 120°F (49°C) for better washing performance and shorter cycle time.
- Follow the instructions for loading the dishwasher to ensure effective cleaning.
- Remove insoluble items such as bones, toothpicks, and pieces of paper while loading the dishwasher.

When loading the dishwasher

1 Only load items that are dishwasher-safe.

2 Remove solid, burned-on scraps from dishes prior to loading in the dishwasher.

3 Place items with deep dish bottoms at an angle to help water run off and speed the drying process.

NOTE
- Do not load utensils that are not heat-resistant or have decorative metal trim.

Quick Start

1 **Load the Dishes**

Scrape the dishes free of excess food, bones, and any other hard, non-soluble residue. Pull each rack out and load the dishes as described in this manual.

2 **Measure the Detergent**

Using the guidelines in this manual, fill the detergent cup with the recommended amount of detergent and close the lid. If a prewash is desired, the recess on top of the lid should also be filled with detergent.

3 **Close the Door**

4 **Turn on the Dishwasher**

To turn on the display panel, press the **Power** button.

5 **Check the Rinse Aid**

The **Rinse Aid** icon will flash if the level of rinse aid in the dishwasher is low. Add rinse aid if the level is low to maintain the effectiveness of the dry cycle.

6 **Select the Cycle and Options**

Select the cycle and options that best fit the load by referring to the Cycle guide. The display will show the estimated time for the cycle and options selected.

7 **Operate the Dishwasher**

Method 1

- Press the Start button and then close the door in less than four seconds to operate the dishwasher. If the door is not closed within four seconds, the white LED with time flashes, an audible tone is heard, and the cycle does not start.

Method 2

- Close the door first and then press the Start button to operate the dishwasher.

If the door is opened during the cycle, the dishwasher will stop. To resume the cycle, see methods 1 and 2 above.

NOTE
- If the door is opened during the cycle and is not closed within four seconds after selecting the Start button, or if the door is closed without pressing the Start button, the white LED with time flashes, an audible tone is heard, and the cycle does not start.

8 **End of Cycle**

When the cycle is complete, a chime will sound and the display will show **End** until the door is opened or **Power** is pressed. To save energy, press and hold **High Temp** for three seconds to set the End display to automatically turn off a few minutes after the cycle ends.

⚠ CAUTION

- Do not open the door during operation or immediately after it has completed the wash cycle as the steam build up may cause scalding as the door is opened.

NOTE
- Empty the lower rack first and then the upper rack. This will avoid water dripping from the upper rack onto dishes in the lower rack.

Auto-Off

The dishwasher automatically turns off after four minutes of inactivity if paused or if no cycle is started.

Control Panel

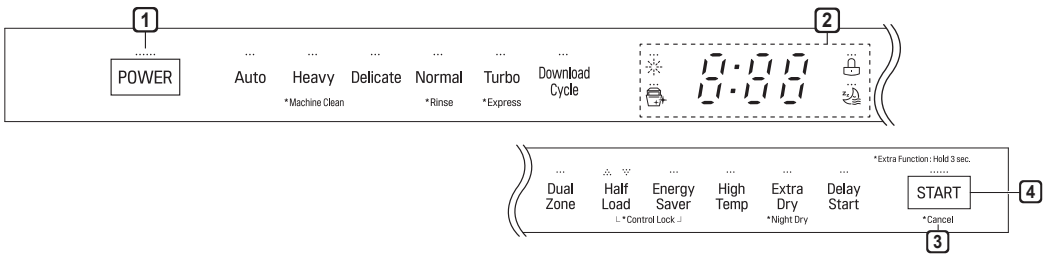

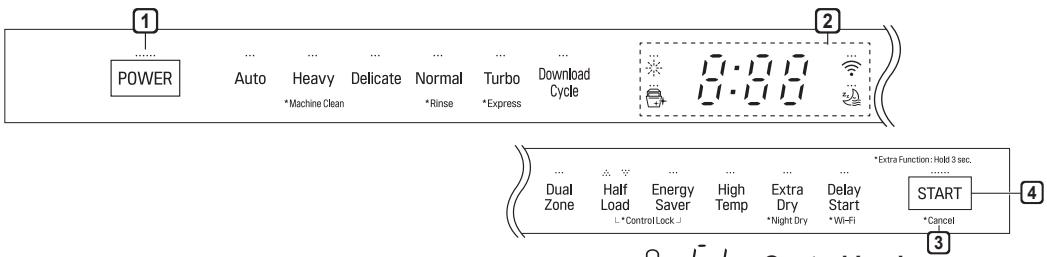

1 Power

- Press the **Power** button to turn power on and off.
- After the cycle is complete, the power automatically turns off for purposes of safety and economy.
- If there is a power surge, power outage, or disruption of any kind, power is automatically turned off for safety.
- When power is connected again, it will turn on automatically and resume the cycle.

2 Display

- : **Rinse Aid Icon**
  - This icon illuminates when the rinse aid level is low. The LED automatically shuts off when the rinse aid is refilled or the level is set to 0.
  - Refer to the Rinse Aid Dispenser Adjustment section.
- : **Digital Display**
  - The digital display on the control panel shows the ESTIMATED cycle time. When the cycle and options are selected, the display shows the total estimated time to complete those selections. During operation, the display shows the remaining estimated operating time.

NOTE

- The estimated time shown on the display does not include delay times for heating water, etc.
- If **Delay Start** is selected, the display shows the delay time in hours.
- Cycle time may vary depending on the soil level of your load.

- , : **Control Lock**
  - The Control Lock feature helps prevent settings from being changed during a cycle. Selecting this feature locks all of the buttons, except for the **Power** button, on the control panel. This feature does not lock the door.
  - While a cycle is running, press and hold **Half Load** and **Energy Saver** simultaneously for three seconds to activate or deactivate Control Lock.
  - To start a new cycle, deactivate Control Lock.
- : **Wi-Fi** (for Wi-Fi models)
  - When the appliance is connected to the internet through a home Wi-Fi network, this icon illuminates.
  - Press and hold **Delay Start** for approximately three seconds to connect to the network.

3 Cancel

- The drain pump activates and the cycle cancels. Once the dishwasher finishes draining, the power turns off.
- Press and hold **Start** for three seconds to activate.

4 Start

- To operate the machine, either press **Start** and close the door within four seconds or close the door and press **Start**.
- If **Start** button is not pressed to start the cycle, an alert will sound.

Chime On/Off

- To activate or deactivate the button sounds, press the **Half Load** button for three seconds. The error alert sound cannot be turned off.

Cycles

Select your desired cycle.

Auto

This cycle senses the load size, soil amount and soil toughness and is optimized to achieve the best cleaning.

Heavy

This cycle is for heavily soiled dishes and dishes with hardened on soil. The Heavy cycle defaults to the strongest spray intensity and uses it to wash heavily soiled dishes.

Delicate

Use this cycle to clean delicate items such as fine china and stemware.

Normal

This cycle is for moderately soiled, everyday loads. Select the **Night Dry** option if leaving dishes overnight. Press and hold **Extra Dry** for three seconds to activate Night Dry.

- After the cycle ends, the fan runs for an hour to help vent the warm, moist air in the tub. You can stop the fan by opening the door after the cycle ends.

Turbo

This cycle will clean heavily soiled dishes in an hour using slightly more energy and water.

- This cycle does not have drying. Select the **Extra Dry** and **Night Dry** option or another cycle for better drying.

Download Cycle

Use a dedicated cycle downloadable via Wi-Fi or NFC.

NOTE

- Only the cycle code for the current Download cycle appears on the appliance. See the smartphone app for cycle codes, names, and more information about the available cycles.

  - Default Cycle : P1. Pots & Pans

Machine Clean

This cycle is for cleaning the inside of the dishwasher. Use the cycle without dishes in the machine. It eliminates residual soils, odor, white spots, and other dirt. Add citric acid or another cleaning agent for more effective results.

- Press and hold **Heavy** for three seconds to activate.

NOTE

- The **Machine Clean** icon flashes every 30 cycles. To activate or deactivate the icon, press the **Delicate** button for three seconds.

Rinse

This cycle is a quick rinse for dishes that will not be washed immediately. The cycle rinses dishes that have excess soil to soften dried on residue. Rinsing the dishes helps prevent odors in the dishwasher. No detergent should be used.

- This cycle does not have drying.
- Press and hold **Normal** for three seconds to activate.

Express

This cycle will quickly clean lightly soiled dishes. (Time : 33 minutes)

- This cycle does not have drying. Select the **Extra Dry** and **Night Dry** option or another cycle for better drying.
- Press and hold **Turbo** for three seconds to activate.

Options

Select the desired cycle button and then select the options for that cycle.

Dual Zone

This option automatically sets the spray intensity to soft for the upper spray arm and strong for the lower spray arm. Place heavily soiled dishes like plates and bowls in the lower rack and lightly soiled dishes like cups and small plates in the upper rack to get the best results.

Half Load

This option washes intensively by selecting the upper or lower racks. For small loads, use just the upper or lower rack to save energy and time. By pressing the **Half Load** button, the settings , and the cancellation of the Half Load option are available.

Energy Saver

This option saves energy by reducing the wash and rinse temperatures. Wash time is increased to maintain wash performance. Do not use this cycle with heavily soiled dishes.

High Temp

Raises the main wash temperature to improve cleaning.

Extra Dry

Select the **Extra Dry** option for better drying performance. This option adds extra drying time to the cycle and raises the heated rinse temperature.

- When the rinse aid is empty, the **Extra Dry** option is selected automatically.

Night Dry

Dishes are often left in the dishwasher overnight after the cycle ends. This can result in the steam inside the tub condensing on dishes, leaving them wet. The Night Dry option runs the ventilation fan periodically to help vent the steam from the tub.

- Press and hold **Extra Dry** for three seconds to activate.
- The **Night Dry** option is selected by default on all cycles for which it is available, except the Normal cycle.

Delay Start

The Delay Start feature delays the start of a selected cycle. Each time the **Delay Start** button is pressed, the delay time increases by an hour. The delay time can be set from 1 to 12 hours, in one-hour increments.

Cycle/Option Guide

The cycle guide below shows the available options for each cycle.

Cycle		Auto	Heavy	Delicate	Normal	Turbo	Express	Rinse	Machine Clean
Soil Level		all levels	heavy	light	all levels	heavy	light	light	
*Water Usage		13.1-21.1 L 3.4-5.6 gal	26.9 L 7.1 gal	19.7 L 5.2 gal	9.2-19.5 L 2.4-5.2 gal	27.5 L 7.3 gal	20.4 L 5.4 gal	6.8 L 1.8 gal	12.3 L 3.2 gal
**Wash Time with Options (Mins.)		90 - 210	138 - 214	94 - 133	97 - 190	58 - 121	32 - 103	12	82
Available Options	Dual Zone	○	○		○	○	○		
	Half Load	○	○	○	○				
	***Energy Saver	○		○	○				
	High Temp	○	○		○	○	○		
	Extra Dry	○	○	△	○	○	○		
	Night Dry	□	□	□	○	□	□		
	Delay Start	○	○	○	○	○	○	○	○

* Actual water consumption will vary depending on soil level and hardness of water.

** The actual running time and cycle time displayed may change depending on options chosen, soil level, water temperature, and hardness of water. Therefore, display time and actual running time can be different.

*** Energy Saver cannot be used at the same time as Extra Dry or High Temp.

△ : Extra drying time only, no added high-temperature rinse.

□ : ON by default.

NOTE

- Options are not available for Download Cycle.

Loading the Dishwasher

The extra tall tub allows loading of dishes, pans, or other utensils up to 14" high.

For effective washing performance, always follow the following instructions.

- Remove large particles of food debris from plates including bones etc. before loading.
- Items with burnt on food should be soaked prior to loading in the dishwasher.
- Deep pots or dishes should be placed upside down.
- Make sure that all items do not touch each other.

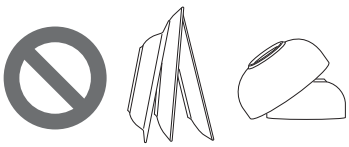

Non-Dishwasher Safe Items

The combination of high water temperature and dishwasher detergents may damage certain items. Do not wash the following items in the dishwasher.

- Copper or anodised aluminium
- Hand painted silver or gold leaf crockery
- Wood or bone handled utensils
- Iron or non rust proof utensils
- Plastic items which are not dishwasher safe
- Expensive ware such as silver and dishes with golden rings
- Fragile item such as crystal glasses

⚠ CAUTION

- Do not place pots or pans with plastic handles in the appliance as the handles may deteriorate due to the heat and detergent.
- Water proof or long lasting lipstick smudges on glasses may not be removed during the wash.

Loading the Lower Rack

Loading 10 Place Settings

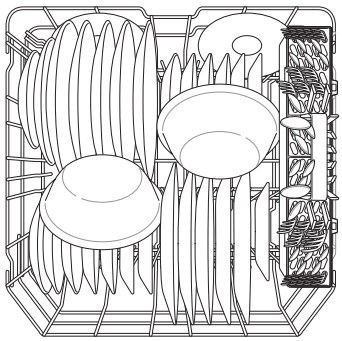

Loading 12 Place Settings

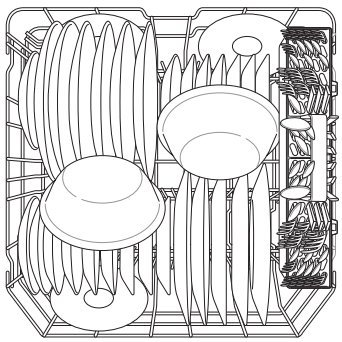

Lower Rack Loading Tips:

- Plates should be positioned upright and facing the center of the rack and pots, pans and large dishes must be turned upside down.
- Load dinner plates, dishes, soup bowls etc. between the tines.
- Load cookie sheets, cake pans and other large items on the sides or back of the rack. Loading these items in the front of the dishwasher can prevent the water spray from reaching the detergent dispenser.
- Make sure that pot handles and other large items do not stop the rotation of the spray arms.
- The lower rack should not be used for small items such as cups, wine glasses, or small plates. These items should be loaded in the upper rack.
- Make sure that large items do not interfere with the rotation of the spray arms, and do not prevent the detergent dispenser from opening.

Folding Down the Lower Tines

Fold tines down to fit larger dishes; pull tines back up to fit smaller dishes.

Case 1

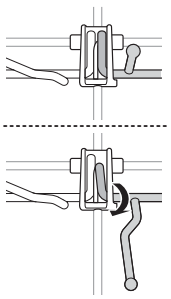

Case 2

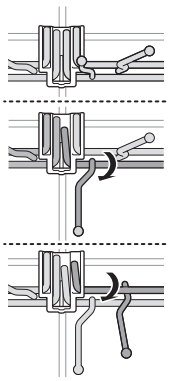

Loading Dishes & Pots

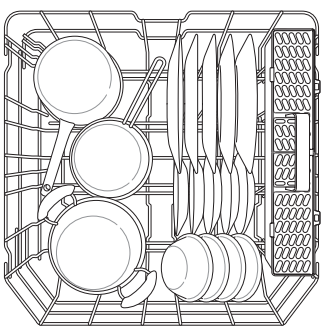

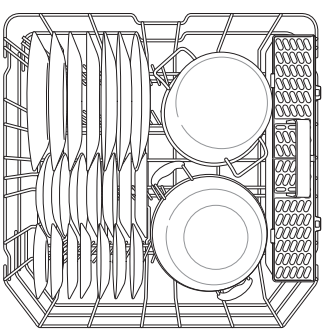

Loading Pots & Bowls

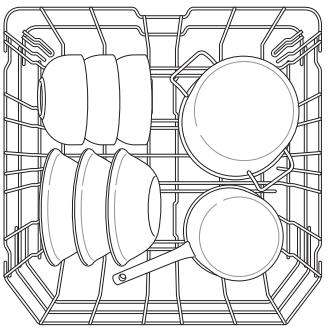

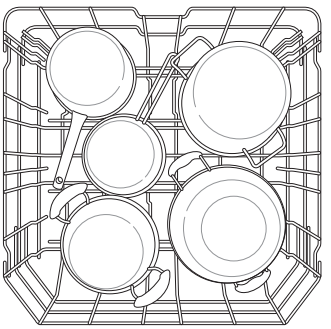

NOTE

- The silverware basket ships installed at the back of the bottom rack. For best performance, install it along the right side as shown.

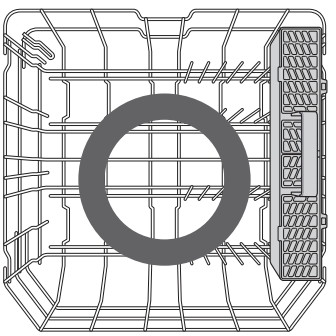

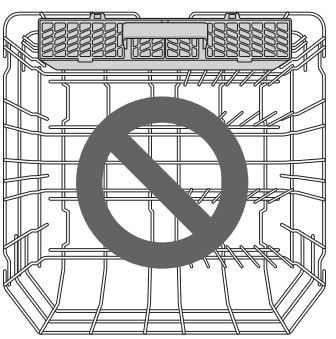

Loading the Silverware Basket

The silverware basket has separators to avoid scratching and tarnishing of delicate silverware.

Loading 10 Place Settings

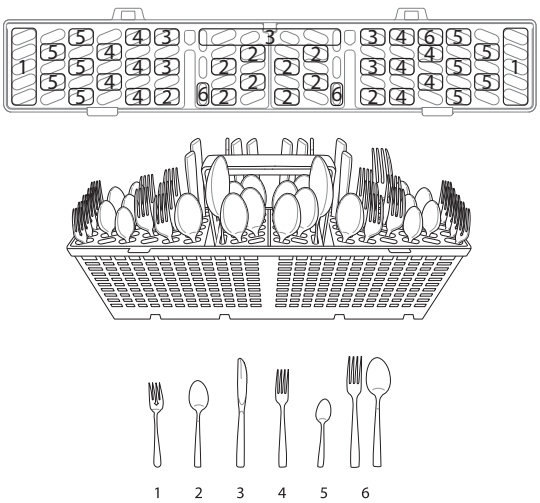

Loading 12 Place Settings

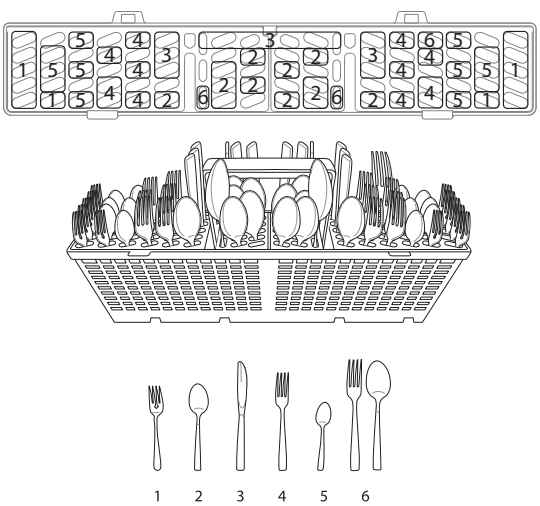

Silverware Loading Tips:

- For best cleaning results, use the top separators in the basket when loading silverware. The separators will prevent nesting of silverware.
- Load sharp items, such as knives, pointing down.
- When unloading the dishwasher, it is best to start with the silverware basket. Doing so will prevent water droplets from falling on your silverware from the upper rack.

⚠ WARNING

- Be careful when loading and unloading sharp items. Load sharp knives with the handles up to reduce the risk of personal injury.

Loading the Upper Rack

Loading 10 Place Settings

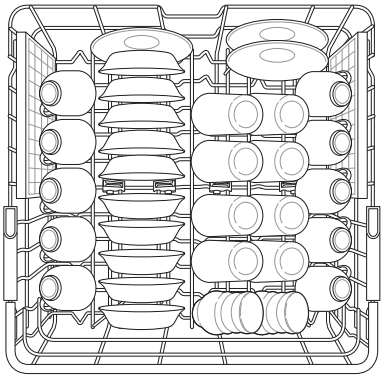

Loading 12 Place Settings

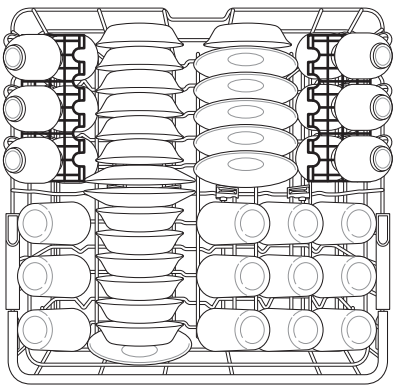

Upper Rack Loading Tips:

- Place cups and glasses in the rows between the rack tines. Placing them over the rack tines can lead to breakage and water spots.
- To avoid chipping, do not let stemware touch other items.
- Place items so that the open end faces down for cleaning and drying.
- Do not stack items on top of each other.
- Use the upper rack for small or delicate items such as small plates, cups, saucers, glasses, and dishwasher-safe plastic items.
- Cups, glasses, and bowls must be positioned upside down.
- Extra cups or cooking utensils can be laid on the fold down cup racks, which may also provide support for long-stemmed glasses.
- Make sure items do not interfere with the rotation of the spray arms above and below the upper rack.
- When loading larger items in the upper rack, such as wine glasses or taller cups, it may be necessary to remove the cutlery rack if one is present.

Loading the Cup Rack (On Some Models)

Some models have cup racks that provide support for long-stemmed glasses.

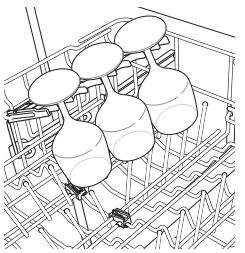

The cup racks can be folded up out of the way for tall glasses.

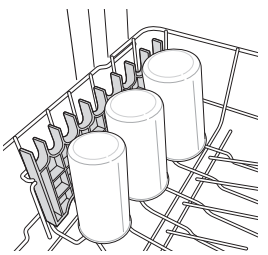

Removing and Replacing Cup Racks (On Some Models)

The left and right cup racks are interchangeable and can be removed.

1 Slide cup rack down into its closed position.

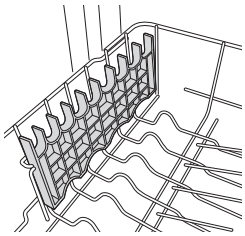

2 Locate assembly slot on cup rack and firmly pop rack off support bar on that side.

- The rack on the left pops free at the back. The rack on the right pops free at the front.

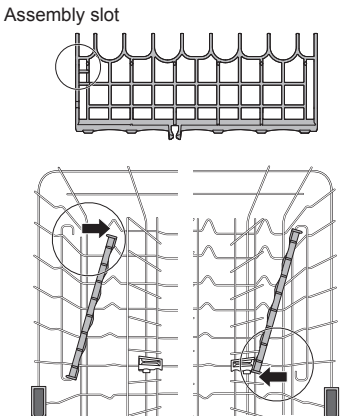

3 Slide cup rack off support bar on opposite side.

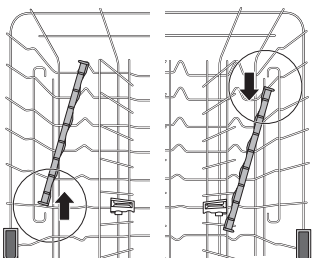

4 Reverse instructions to replace cup rack.

Folding Down the Upper Tines

Fold tines down to fit larger dishes; pull tines back up to fit smaller dishes.

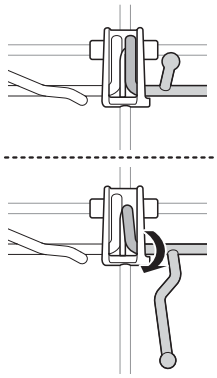

Loading Dishes & Pots

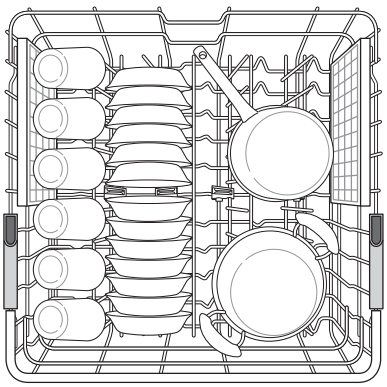

Height Adjustable Upper Rack

The upper rack adjusts up and down. Raise the upper rack to allow items up to 14" tall in the lower rack. Lower the upper rack to allow dishes up to 12" tall in the upper rack. The dishwasher ships with the upper rack raised.

There are three available positions for adjusting the height of the upper rack to create more space.

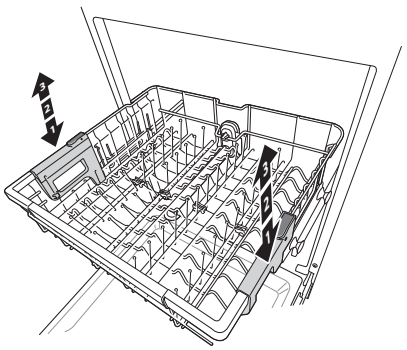

Lowering the Rack:

Hold the rack at the center of each side to support its weight. Then, push the button on each side to release the rack and lower it to the lower position.

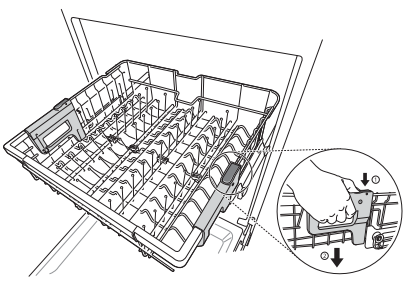

Raising the Rack:

Lift the rack at the center of each side until the rack locks into place in the upper position. It is not necessary to lift the lock levers to raise the rack.

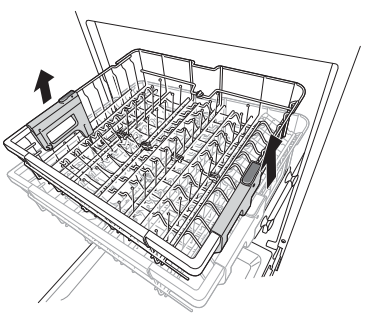

⚠ WARNING

- Before adjusting, ensure the rack is empty of all dishes. Otherwise dishes may get damaged or you may get injured.

NOTE

- Before pushing the upper rack into the dishwasher, ensure the rack height is the same on both sides. If the height is not the same on both sides, the dishwasher door will not shut and the upper spray arm will not connect to the water inlet.
- Raise the upper rack without pushing the buttons on each side. Pushing the buttons when raising the rack will prevent the rack from locking into position.
- To set the rack to the middle position, it may be easier to lower the rack all the way down and then raise each side of the rack individually until it clicks into place.

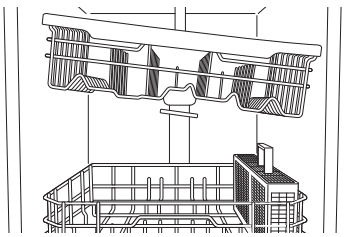

- There is a 24 $^{5}/_{8}$ inches (56 mm) gain in height when the upper rack is moved to the lower position.
- After adjusting the rack levels, check that the spray arms are free to rotate.
- With the lower position of the upper rack, check if the bottom part of upper rack including spray arm is not disturbing items on the lower rack.
- When the upper rack is in the lower position, push in the upper rack first, and the lower rack later.
- Pull out the lower rack first, and the upper rack later.
- Raise the upper rack without pushing the buttons on each side. Pushing the buttons when raising the rack will prevent the rack from locking into position.
- To set the rack to the middle position, it may be easier to lower the rack all the way down and then raise each side of the rack individually until it clicks into place.

Removing the Snap-In Gliding Upper Rack

These instructions are for models with snap-in rack supports rather than wheeled rack supports.

⚠ CAUTION

- The snap-in upper rack should only be removed for servicing. If you need to remove the rack, wear gloves and handle the screwdriver carefully to avoid personal injury or damage to the dishwasher.

1. Pull the upper rack out until it stops. Remove any contents from the rack.

2. To remove the front rack supports from the rails, push the front hooks open with a flat-blade screwdriver while pulling the front of the rack up to snap the front rack support out of the hooks. Repeat to snap the front support out on the opposite side.

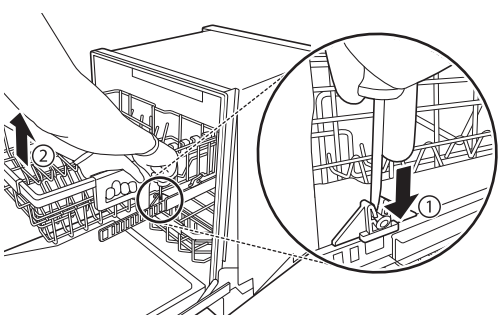

3. To remove the back rack supports from the rails, hold a side rail with one hand, lift the front of the rack, and firmly push the rack back to snap the support out of the hooks in the rear. Repeat on the opposite side.

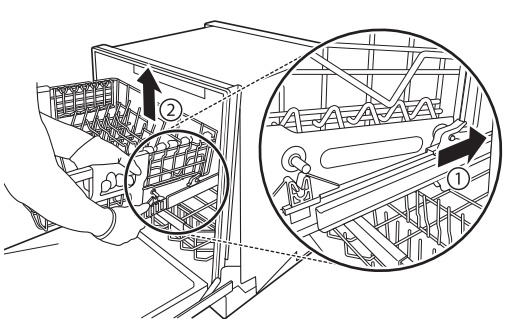

4. To replace the rack, place the back rack supports behind the rear hooks and pull the rack forward to snap the supports into the hooks. Then align the front rack supports with the front hooks and push the front of the rack down to snap the supports into the front hooks.

Loading the Cutlery Rack (On Some Models)

The cutlery rack is best suited for flatware and most cooking or serving utensils. It can also fit small prep bowls and lids. The separators on the cutlery racks help keep flatware separated to avoid damage and improve cleaning.

NOTE

- For best cleaning performance, place flatware in the silverware baskets. Heavily soiled utensils or items with baked on foods should be placed in the middle rack or spoon basket for best performance.

Loading 10 Place Settings

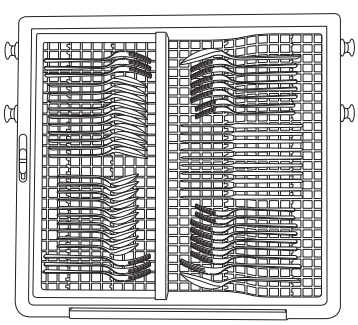

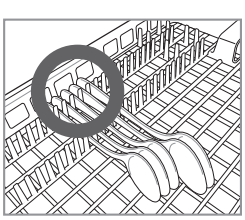

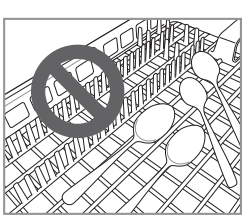

Height Adjustable Tray (On Some Models)

The tray on the left side can be adjusted to a high or low position to accommodate utensils or cutlery of different sizes. Remove dishes before adjusting the tray. Adjust the tray by sliding the lever.

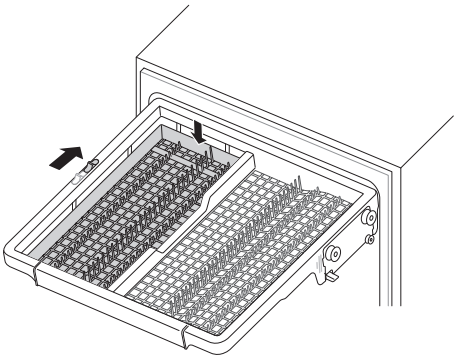

Removing the Cutlery Rack

The entire cutlery rack can be removed if more space is needed on the upper rack for larger items.

Always remove the cutlery from the rack before removing the rack.

Pull the rack out to the end of the rails. Then, lift the front of the rack so that the rollers clear the stop on the end of the rail. The rack can now be slid forward and removed from the rails.

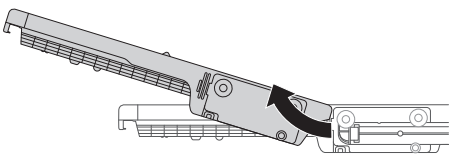

WARNING

- Be careful when loading and unloading items with sharp edges. Load sharp knives with the blade down to reduce the risk of injury.

Adding Cleaning Agents

Adding Detergent to the Dispenser

- Remove the label on the dispenser prior to running the dishwasher for the first time.
- The amount of detergent needed depends on the cycle, load size, and soil level of dishes.
- Put detergent into the detergent compartment before starting any cycle, except the Rinse cycle.

1 Push the button on the dispenser lid to open the cover.

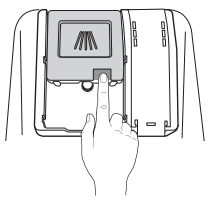

2 Add dishwashing detergent to the main wash compartment until the level is between the lines marked 15 and 25.

- Fill to over the 25 line for hard water or heavily soiled loads.
- Fill to the 15 line for soft water or lightly soiled loads.

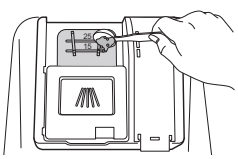

3 Push the detergent lid to slide the lid closed until it clicks.

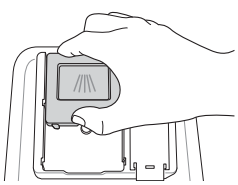

4 If a prewash is desired, fill the recessed prewash compartment area on the lid with detergent.

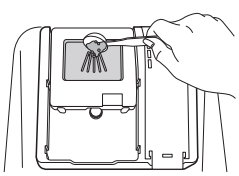

⚠ WARNING

- Dishwasher detergent and rinse aid contain chemical components, like all other household detergent. So, they must be kept out of the reach of children.

⚠ CAUTION

- Use only detergent intended for dishwashers. Incorrect detergent may cause the dishwasher to fill with suds during operation. Excess suds may reduce wash performance and may cause the dishwasher to leak.
- Do not use liquid rinse aid if using detergent tablets which include rinse aid.

NOTE

- After completion of the wash program, check whether the detergent was completely washed out.
- Some dishwasher detergent tablets may become stuck in the dispenser due to their excessive size. Tablets can be placed onto the base of the wash tub next to the filter before starting the cycle.
- Too much detergent can leave a film on dishes and in the dishwasher, resulting in poor wash performance.
- If dishwasher detergent tablets are used without liquid rinse aid, the dishes and dishwasher interior will have excessive moisture. Select the **Extra Dry** option for better drying performance.
- Using liquid rinse aid improves drying performance by allowing water to drain off of dishes after final rinse.
- Do not use detergent tablets for shorter wash cycles. The tablet may not dissolve completely, causing detergent residue on dishes and inefficient cleaning.
- Using a wash booster helps remove spots, residue, and the white film caused by hard water. It does not help remove excess detergent residue.

Adding Rinse Aid to the Dispenser

The **Rinse Aid** indicator appears in the display when more rinse aid is needed.

The use of rinse aid is recommended to prevent water spots on dishes and to enhance drying performance.

1 Open the rinse aid lid by lifting up the flap.

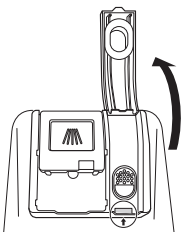

2 Add a liquid rinse aid to the maximum fill level. The rinse aid should be settled in the dispenser while filling, or air bubbles may result in poor drying performance. Avoid overfilling the dispenser.

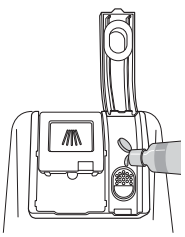

3 Close the lid to lock the dispenser. Rinse aid is dispensed automatically during the final rinse cycle.

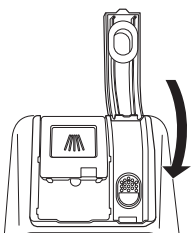

NOTE

- Only use liquid rinse aid in the dishwasher.
- Do not overfill the rinse aid dispenser.
- Wipe off any spilled rinse aid around the dispenser.

Rinse Aid Dispenser Adjustment

The dispenser has five adjustment levels. The dishwasher is programmed at the factory for a rinse aid dispenser level of 2. This can be checked and altered by using the buttons on the control panel.

1 Ensure the appliance is off.

2 Press **Dual Zone** and **Power** simultaneously to check the current setting.

3 Press **Delay Start** to change the rinse aid dispenser setting. Each press of the button changes the setting one step from L0 to L4.

4 Once the desired rinse aid dispenser setting is selected, press **Start** to save.

NOTE

- Adjust the setting higher if you have hard water and notice calcium buildup on your dishes.
- Setting the rinse aid control too low will contribute to spotting and streaking on dishes and poor drying performance.
- Setting the control too high can cause foaming, which will cause poor wash performance.

Refilling the Rinse Aid

How often the dispenser needs to be refilled depends on how often dishes are washed and the rinse aid setting used.

- The **Rinse Aid** icon flashes when more rinse aid is needed, unless the rinse aid dispenser setting is set to L0.

SMART FUNCTIONS

Application Installation

Search for the LG Smart ThinQ application from the Google Play Store on a smart phone. Follow instructions to download and install the application.

Product Registration

1 Run the LG Smart ThinQ application on a smart phone.

2 Create an account and sign in.

3 Select **Register**.

4 Select **Dishwasher**.

5 Follow the instructions on the smart phone.

Using the Tag On Function

- This function is for NFC model.

Conveniently use the smart features to communicate with the appliance right from a smart phone.

The Tag On function can only be used with most smart phones equipped with the NFC (Near Field Communication) function and based on the Android OS (operating system).

Using the Application

1 Select the appliance from the Dashboard to use the desired functions by touching the LG appliance's Tag On logo with an NFC-equipped smart phone.

2 Select the menu on upper right side to use the smart functions.

Download Cycle

Download new and special cycles that are not included in the basic cycles on the appliance.

Appliances that have been successfully registered can download a variety of specialty cycles specific to the appliance.

Only one cycle can be stored on the appliance at a time.

Once cycle download is completed in the appliance, the appliance keeps the downloaded cycle until a new cycle is downloaded.

Machine Clean Coach

This function shows how many cycles remain before It is time to run the Machine Clean cycle.

Smart Diagnosis™

This function provides useful information for diagnosing and solving issues with the appliance based on the pattern of use.

Settings

Set the Rinse Aid Dispenser Level, Machine Clean Reminder, Chime On/Off and Clean Indicator Light.

NOTE

- Hold the back of the smart phone firmly on top of the Tag On logo. If you can't make a connection, then move the smart phone up and down slowly.
- Smart functions can not be activated unless the appliance is turned on by pressing the **Power** button.
- Press ? in the LG Smart ThinQ application for a more detailed guide on how to use the Tag On function.
- To operate the NFC function on this appliance requires a smart phone which has at least a certain level of a NFC-enabled smart phone. Because of the characteristics of NFC, if the transmission distance is too far, or if there is a metal sticker or a protective case on the phone, transmission will not be good. In some cases, NFC-equipped phones may be unable to transmit successfully.
- The content found in this manual may differ from the current version of the LG Smart ThinQ application, and the software may be modified without informing customers.
- NFC function would vary depending on smart phones.

Using the Wi-Fi Function

- This function is for Wi-Fi model.

Communicate with the appliance from a smart phone using the convenient smart features.

Using the Application

1 Select the product in the application and connect it to a Wi-Fi network.

2 Select the menu on the upper right side to access settings and features.

Monitoring

Check the current status, cycle, options, running time and cycle end time for the appliance on a single screen.

Download Cycle

Download new and special cycles that are not included in the basic cycles on the appliance.

Appliances that have been successfully registered can download a variety of specialty cycles specific to the appliance.

Only one cycle can be stored on the appliance at a time.

Once cycle download is completed in the appliance, the appliance keeps the downloaded cycle until a new cycle is downloaded.

Machine Clean Coach

This function shows how many cycles remain before It is time to run the Machine Clean cycle.

Smart Diagnosis™

This function provides useful information for diagnosing and solving issues with the appliance based on the pattern of use.

Settings

Set the Rinse Aid Dispenser Level, Machine Clean Reminder, Chime On/Off and Clean Indicator Light.

Push Alerts

Turn on the Push Alerts to receive appliance status notifications.

The notifications are triggered even if the LG Smart ThinQ application is off.

NOTE

- To verify the Wi-Fi connection, check that **Wi-Fi** icon on the control panel is lit.
- LG Smart ThinQ is not responsible for any network connection problems or any faults, malfunctions, or errors caused by network connection.
- The machine supports 2.4 GHz Wi-Fi networks only.
- If the appliance is having trouble connecting to the Wi-Fi network, it may be too far from the router. Purchase a Wi-Fi repeater (range extender) to improve the Wi-Fi signal strength.
- The Wi-Fi connection may not connect or may be interrupted because of the home network environment.
- The network connection may not work properly depending on the internet service provider.
- The surrounding wireless environment can make the wireless network service run slowly.
- This information is current at the time of publication. The application is subject to change for product improvement purposes without notice to users.

Open Source Software Notice Information

To obtain the source code under GPL, LGPL, MPL, and other open source licenses, that is contained in this product, please visit http://opensource.lge.com. In addition to the source code, all referred license terms, warranty disclaimers and copyright notices are available for download.

LG Electronics will also provide open source code to you on CD-ROM for a charge covering the cost of performing such distribution (such as the cost of media, shipping, and handling) upon email request to opensource@lge.com. This offer is valid for three (3) years from the date on which you purchased the product.

FCC Notice (For transmitter module contained in this product)

This equipment has been tested and found to comply with the limits for a Class B digital device, pursuant to Part 15 of the FCC Rules. These limits are designed to provide reasonable protection against harmful interference in a residential installation. This equipment generates, uses, and can radiate radio frequency energy and, if not installed and used in accordance with the instructions, may cause harmful interference to radio communications. However, there is no guarantee that interference will not occur in a particular installation. If this equipment does cause harmful interference to radio or television reception, which can be determined by turning the equipment off and on, the user is encouraged to try to correct the interference by one or more of the following measures:

- Reorient or relocate the receiving antenna.
- Increase the separation between the equipment and the receiver.
- Connect the equipment to an outlet on a circuit different from that to which the receiver is connected.
- Consult the dealer or an experienced radio/TV technician for help.

This device complies with part 15 of the FCC Rules. Operation is subject to the following two conditions:

1) this device may not cause harmful interference and

2) this device must accept any interference received, including interference that may cause undesired operation of the device.

Any changes or modifications in construction of this device which are not expressly approved by the party responsible for compliance could void the user's authority to operate the equipment.

FCC RF Radiation Exposure Statement

This equipment complies with FCC radiation exposure limits set forth for an uncontrolled environment. This transmitter must not be co-located or operating in conjunction with any other antenna or transmitter.

This equipment should be installed and operated with minimum distance 20 cm (7.8 inches) between the antenna and your body. Users must follow the specific operating instructions for satisfying RF exposure compliance.

Wireless LAN Module Specifications

Model	LCW-003
Frequency Range	2412 to 2462 MHz
Output Power (Max)	IEEE 802.11 b : 17.56 dBm IEEE 802.11 g : 25.53 dBm IEEE 802.11 n : 25.29 dBm

Using Smart Diagnosis™

Use this function if you need an accurate diagnosis by an LG Electronics customer information center when the appliance malfunctions or fails.

Smart Diagnosis™ can not be activated unless the appliance is turned on by pressing the **Power** button. If the appliance is unable to turn on, then troubleshooting must be done without using Smart Diagnosis™.

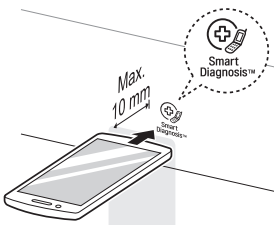

Smart Diagnosis™ Using a Smart Phone

1 Open the LG Smart ThinQ application on the smart phone.

2 Select the appliance and then the menu on upper right side.

3 Select the **Smart Diagnosis**, then press **Start Smart Diagnosis** button.

4 Follow the instructions on the smart phone.

If the diagnosis fails several times

5 Select **Try Again** or **Audible Diagnosis**.

6 Place the mouthpiece of the smart phone close to the Smart Diagnosis™ icon.

7 Press and hold **Download Cycle** until a countdown displays on the appliance.

8 Keep the phone in place until the tone transmission has finished. View the diagnosis on the phone.

NOTE

- Smart Diagnosis™ may fail if the network is unstable.

Smart Diagnosis™ through the Customer Information Center

1 Call the LG Electronics Customer Information Center at:

(LG U.S.A.) 1-800-243-0000

(LG Canada) 1-888-542-2623

2 When instructed to do so by the call center, place the mouthpiece of the phone close to the Smart Diagnosis™ icon. Do not press any other buttons.

3 Press and hold **Download Cycle** until a countdown displays on the appliance.

4 Keep the phone in place until the tone transmission has finished.

- For best results, do not move the phone while the tones are being transmitted.
- If the call center agent is not able to get an accurate recording of the data, you may be asked to try again.

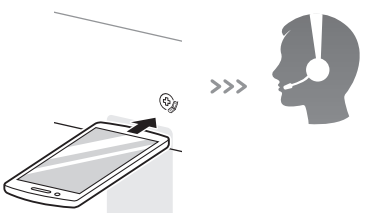

5 Once the countdown is over and the tones have stopped, resume your conversation with the call center agent, who will then be able to assist you using the information transmitted for analysis.

NOTE

- The Smart Diagnosis™ function depends on the local call quality.
- The communication performance will improve and you can receive better service if you use the home phone.
- If the Smart Diagnosis™ data transfer is poor due to poor call quality, you may not receive the best Smart Diagnosis™ service.

MAINTENANCE

To maintain performance and prevent trouble, it is important to check the outside and inside of the dishwasher, including filters and spray arms, at regular intervals.

WARNING

- When cleaning the outside and inside of the dishwasher, do not use benzene or thinner. Otherwise, it may cause fire or explosion.
- To prevent injury during care and maintenance or cleaning, wear gloves and/or protective clothing.

NOTE

- If you have not used the dishwasher for a long time, refresh the inside by running the Machine Clean cycle without detergent. When the cycle is finished, clean the inside and outside of the dishwasher according to the Maintenance instructions.

Cleaning the Exterior

- In most cases, the exterior of the dishwasher can be cleaned with a soft damp cloth or sponge, then dried with a soft cloth. If the dishwasher has a stainless steel exterior, use a stainless steel cleaner.

Cleaning the Interior

- Clean the interior of the dishwasher periodically with a soft, damp cloth or sponge to remove food and dirt particles.
- To remove white spots and odor from inside the dishwasher, run an empty cycle, without detergent, with one cup of white vinegar in a dishwasher safe glass or bowl placed on the upper rack. (Vinegar is an acid and with constant use it could damage the appliance.)

Seasonal Maintenance and Storage

- If you will be absent for an extended period of time during warmer months, close the water valve and disconnect the power supply line, or turn off the circuit breaker. Clean the filter, tub and dispenser to prevent odor.
- If you will be absent for an extended period of time during colder months and there is a possibility of freezing temperatures, winterize the water supply lines and the dishwasher itself. Winterization must be performed by qualified service personnel.

Clogged Drain Air Gap or In-Sink Disposal

Check the drain air gap or in-sink disposal if the dishwasher is not draining well.

Cleaning the Air Gap

1 Turn off the dishwasher.

2 Remove the air gap cover and the plastic cap underneath it.

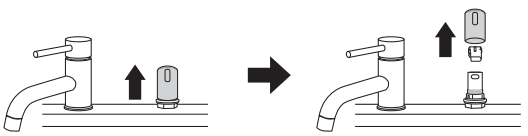

3 Clean out any debris with a toothpick or brush.

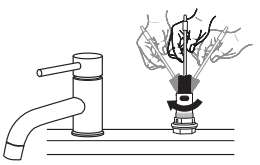

4 Replace the plastic cap and air gap cover.

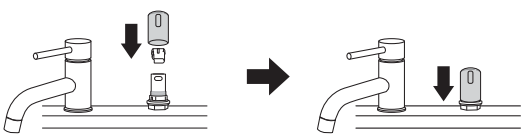

NOTE

- The drain air gap and disposal are external plumbing devices that are not part of the dishwasher.
- The warranty provided with the dishwasher does not cover service costs directly associated with the cleaning or repair of the external drain air gap and disposal.

Cleaning the Filters

1 Remove the lower rack and position the bottom spray arm so a wider vee is open to the front.

2 Turn the inner filter counter-clockwise and take out the assembled inner filter and stainless steel filter.

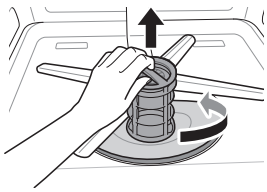

3 Clean the filters with a soft brush under running water. Reassemble the filters before reinstalling them.

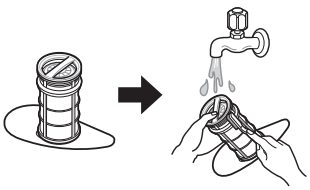

4 To replace the assembled filters, position the spray arm so the wider vee is toward the front. Fit the filters back into the filter holder and secure them by turning the inner filter clockwise until it clicks into place.

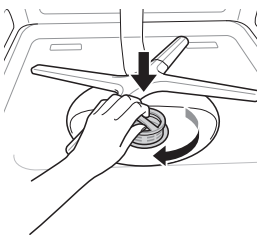

⚠ WARNING

- Be cautious of sharp edges when handling the stainless steel filter.

⚠ CAUTION

- Remove food residue caught in filters to prevent the build up of odor-causing bacteria and possible drainage problems.

NOTE

- For best wash performance, clean the filter after each load. If food debris remains in the filter, it may cause an odor.
- In areas with hard water, clean the filter at least once a month with a soft brush.
- Clean the filters using non-abrasive materials and warm running water.
- Make sure the filter is assembled correctly before starting a cycle. When assembling, rotate it firmly until it clicks.

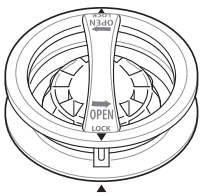

Recommended Filter Cleaning Schedule

Number of Loads Per Week	If you wash dishes before loading	If you scrape and rinse dishes before loading	If you only scrape dishes before loading	If you do not scrape or rinse dishes before loading
1-3	Every 6 months	Once a year	Four times a year	Once a month
4-7	Every 6 months	Once a year	Four times a year	Twice a month (every 15 days)
8-12	Every 6 months	Every 6 months	Every 1.5 months	Every week
13-14	Every 6 months	Every 6 mont	Every 1.5 months	Twice a week

Cleaning the Spray Arms

If the spray arm holes are blocked by any food residue, dishes may not be cleaned well due to improper water spray.

It is recommended that the spray arms be cleaned once every two weeks.

Cleaning the Lower Spray Arm

1 Make sure that the water jet holes are not blocked by food particles.

2 If any food residue blocks the spray arm holes, remove it with a pin or any sharp tool.

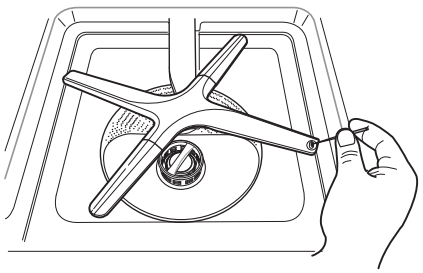

Cleaning the Upper Spray Arm

1 Pull the upper rack forward. Make sure that the water jet holes are not blocked by food particles.

2 When cleaning is necessary, remove the upper spray arm by turning the nut on the bottom of the spray arm 1/8 turn counter-clockwise and pulling down.

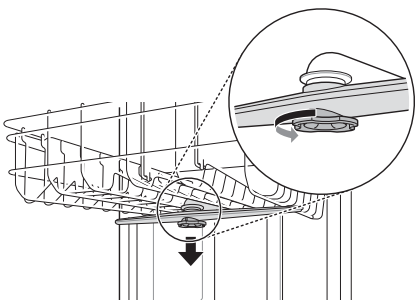

3 Remove food particles by rinsing or shaking the spray arm.

4 If any food residue blocks the spray arm holes, remove it with a pin or any sharp tool.

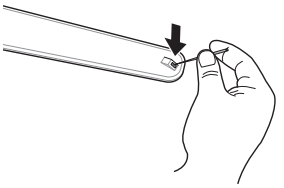

5 After removing the food residue, clean the spray arms holes under running water.

6 After cleaning the upper spray arm, press it up into place. Turn the nut 1/8 turn clockwise to make sure that the nut locks back into place.

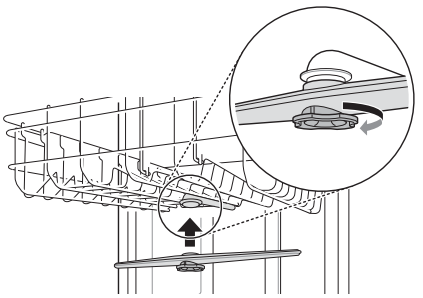

7 After assembly, check whether the spray arms rotate freely.

TROUBLESHOOTING

FAQs: Frequently Asked Questions

Q: Does this dishwasher require a rinse aid to be used?

A: Rinse aid is strongly recommended to enhance the drying performance of the dishwasher. In order to be more energy efficient, the hybrid drying system does not use a heating element to assist in drying, so a rinse aid plays an integral role in the drying process. If a rinse aid is not used, water may remain on the dishes and the tub. Rinse aid helps to ensure that the majority of the water has been sheeted off of the dishes at the end of the rinse and that the load is ready for the dry cycle.

Q: What can be done if my dishes have a cloudy, white film on them after a wash?

A: The cloudy film is usually caused by minerals in the water reacting with the dishwasher detergent. First, be certain not to use too much detergent. Refer to Adding Detergent to the Dispenser section for recommended detergent amounts. Add an extra rinse to the cycle. LG Dishwashers use less water than traditional dishwashers, so adding an extra rinse aids in rinsing the film away. If the water supply is hard, it may be necessary to add a performance booster that addresses the hard water condition.

Q: What steps can I take to improve drying results?

A: Drying performance is directly affected by the amount of heat that remains in the tub after the heated rinse is performed. If your dishwasher is far away from your home's hot water heater, it may be necessary to run the hot water tap in the sink before starting a wash cycle, to ensure that cool water is purged from the hot water lines. This will ensure your dishwasher has a consistent supply of hot water from start to finish. Using the High Temp setting also aids in keeping the inner drum temperature and dishes hotter before drying begins.

LG dishwashers are designed to be used in conjunction with a rinse aid. Using a rinse aid will maximize the amount of water that has already been sheeted away from the dishes before the dry cycle begins. If a rinse aid is used and the performance still needs a boost, adjust the amount of rinse aid used. 2 is the default setting, but if necessary set the level to 3 so more rinse aid is used.

Water tends to bead rather than sheet off plastic and nonstick surfaces, making them more difficult to dry. If washing plastic items in a Normal cycle, select the **Extra Dry** or **Night Dry** option or both for better drying results. When the rinse aid is empty, the **Extra Dry** option is selected automatically.

Allow the dishwasher to completely finish the dry cycle before opening the door. If the door is opened in the middle of the dry cycle, the heat that is necessary for the hybrid dry system to work will escape. This will cause all of the dishes inside to remain wet once the cycle finishes.

Q: What is the hybrid drying system?

A: The dishwasher does not rely on a heating element for the drying process; instead, it relies on the heat that is retained by the dishes and the tub during the wash and rinse cycles to turn the moisture in the tub into humidity.

Warm, moist air in the dishwasher is then pulled into a condensing duct in the door by a fan. The air then cools, which causes the humidity to condense. Room temperature air is also drawn into the duct to help the air cool down faster. When this moisture condenses into a liquid, it is drained out.

NOTE

- Rinse aid is required to enhance the drying performance. If no rinse aid is used, water may remain on the dishes and the tub.

Q: Why am I hearing a whistling sound from the dishwasher?

A: It is important to determine the duration of the noise and when it happens (what part of the cycle). When water is drawn into the dishwasher, a whistling noise can be heard. This is normal. If the water pressure is too high, it will be louder, so it may be necessary to adjust the water valve to lower the pressure if the noise is too loud.

Q: What kinds of dishes can be placed in the dishwasher?

A: Ensure that the dishes you place in the dishwasher are dishwasher safe. Plastic dishware will not dry as effectively as glass and metal dishware. Plastic items do not retain heat as well as glass and metal dishware. Plastic cups and dishes may require some hand drying before being put away at the end of the cycle.

Q: Can I perform a drain only cycle?

A: To drain standing water, press and hold **Start** for three seconds until the cycle stops. Once the dishwasher finishes draining, the power turns off.

Q: Why does my dishwasher continuously chime if I open the door during a cycle or right after the cycle has finished?

A: This is normal. The dishwasher is letting you know that the interior temperatures of the unit are hot and to use caution when placing your hands inside. Once the unit has cooled down, the chiming will stop.

Q:	**What is Control Lock and how is it activated?**
A:	**Control Lock** is a feature that prevents the controls from being changed during the cycle. It does not prevent the door from being opened or the unit from being powered off. To activate or deactivate, press and hold **Half Load** and **Energy Saver** simultaneously for three seconds.

Q:	**Can I add an extension to the drain hose?**
A:	If an extension drain hose is required, use 5/8" or 7/8" inside diameter, 2-3 ft. length hose and a coupler for connecting the two hose ends.

Q:	**An LED is blinking, the machine is chiming, and the dishwasher won't start. What is wrong with the dishwasher?**
A:	This is a safety feature. The door must be closed within four seconds of pressing the **Start** button. If the door is not closed within four seconds, an LED flashes, an audible alert sounds, and the dishwasher does not operate. To start the dishwasher, open the door and either close the door and press **Start** (front controls) or press **Start** and close the door within four seconds (top controls).

Q:	**Before loading dishes, should I pre-rinse dishes?**
A:	No, you don't need to pre-rinse the dishes before loading especially if using the Normal and Auto cycles. The dishwasher washes dishes clean without pre-rinsing.

User Support Videos

For further assistance, there are videos and tutorials available through the LG.com website.

1. On the www.lg.com/us home page, click on the Support menu tab to bring up the menu selections. Select **Video Tutorials**.
2. Select a product category and then pick a topic or search a keyword.

Scan this QR code to quickly access the video search page on the LG website.

Before Calling for Service

The appliance is equipped with an automatic error-monitoring system to detect and diagnose problems at an early stage. If the appliance does not function properly or does not function at all, check the following before you call for service.

Problem	Possible Cause	Solutions
Dishwasher will not operate.	**Start button is not pressed.**	• Press the Start button.
	Door is not completely closed.	• Make sure that the door is completely closed and latched.
	Power supply or power supply line is not connected.	• Connect the power supply or power supply line properly.
	Fuse is blown or circuit breaker tripped.	• Replace the fuse or reset the circuit breaker.
Dishwasher operates too long.	**Dishwasher is connected to cold water.**	• Check the water supply connection or water heater setting. (Heating cold water takes longer.)
Odor	**The previous cycle was stopped before completion and residual water remains in the dishwasher.**	• Turn on the power, run the Cancel cycle option to remove the residual water, then run the Turbo cycle using detergent but with the dishwasher empty.
	There is food in the bottom of the unit or in the filter.	• Clean the filter and the interior according to the Maintenance section of the owner's manual.
	Unwashed dishes are left in the unit for a long time.	• Cycle with one cup of white vinegar in a dishwasher safe glass or bowl placed on the upper rack. (Vinegar is an acid, and with constant use it could damage your appliance.)
Water remains in tub after completion of cycle.	**Drain hose is kinked or clogged.**	• Adjust hose or clear blockage.
Food soil remains on dishes.	**Improper cycle selection.**	• Select correct cycle based on soil level and type of dishware being washed.
	Water temperature is too low.	• Check water supply connection or water heater setting.
	Dishwashing detergent was not used.	• Use recommended detergent.
	Low inlet water pressure.	• Water pressure should be between 20 and 80 psi.
	Water jet holes on spray arms blocked.	• Clean the spray arms.
	Improper loading of dishes.	• Make sure dishes do not block spray arm rotation or interfere with detergent dispenser.
	Filters are clogged.	• Clean filters.
Cloudiness on glassware.	**Combination of excessive detergent and hard water.**	• Use less detergent and use a rinse aid to minimize the problem.
Black or gray marks on dishes.	**Aluminum items rubbing dishes during cycle.**	• Reposition the dishes.
Yellow or brown film on inside surfaces of dishwasher.	**Coffee or tea stains.**	• Eliminate the stain by using a stain removal product.

Problem	Possible Cause	Solutions
Spots and filming on dishes.	**Low water temperature.**	• Water supply should be at least 120 °F for best wash performance.
	Overloading.	• Do not overload the dishwasher.
	Improper loading.	• See the Operation section.
	Insufficient water pressure.	• Water pressure should be between 20 and 80 psi.
	Insufficient detergent.	• Add the recommended amount of detergent. See the Operation section.
	Rinse aid dispenser is empty.	• Refill rinse aid dispenser.
	Hard water buildup in the tub.	• Remove all dishes, silverware and silverware holder from dishwasher. Only racks should remain in tub. For best results, use citric acid powder (can be found in canning sections of most grocery stores or online). Measure 3 tablespoons (40 g) of citric acid powder. Fill main wash compartment with measured powder. If you cannot find citric acid powder, pour approximately one cup (200-300 mL) of white vinegar into shallow bowl and place in upper rack. Run Machine Clean cycle. Do not use detergent.
Noise	**Some level of noise is normal during operation.**	• Detergent cover opening. • Drain pump at the beginning of drain cycle.
	The dishwasher is not level.	• Adjust leveling feet.
	Nozzle arm knocking against dishes.	• Reposition the dishes.
Dishes don't dry.	**Rinse agent dispenser empty.**	• Check and refill the rinse agent dispenser if empty.
Lamps do not illuminate.	**Power is not connected.**	• Connect power supply.
Spray arms do not rotate smoothly.	**Holes of spray arms are blocked by food particles.**	• Clean the holes of spray arms.
Upper rack is crooked.	**Rack is poorly adjusted.**	• See the Height Adjustable Upper Rack section.
Dishwasher continuously chimes when the door is opened, during or right after a cycle has completed.	**This is a safety measure. Contact with escaping steam or the hot contents of the dishwasher could result in injury.**	• Close the door until the dishwasher and dishes have cooled down. The chiming will stop if the door is closed or the interior temperature has cooled.

Problem	Possible Cause	Solutions
Dishwasher chimes if panel is touched during operation.	**Bumping into or touching the control panel during operation may result in a disabled button sound. Only the Power, Start, and Control Lock buttons are enabled during operation to prevent cycle settings from being changed inadvertently.**	• Button sounds can be turned off by pressing and holding **Half Load** for three seconds. • The end of cycle chime and safety alert sounds will still sound.
Dishwasher did not finish cycle.	**Door was opened during cycle.**	• If the door is opened during a cycle, the Start key must be pressed within 4 minutes or the machine turns off and all settings are lost.
Leaking in front of unit	**Dishwasher not leveled properly.**	• Verify the unit is level from side to side and from front to back. See leveling instructions in the Installation section.
P1, P2, P3, or P4 appears in display.	**The Download cycle is selected.**	• This is not an error code. This code indicates the current Download cycle.

Error Codes

Problem	Possible Cause	Solutions
IE	**Water inlet problem.**	• Check for a clogged, kinked or frozen water inlet hose. • Check water supply.
OE	**Drainage Problem.**	• Check for a clogged, kinked or frozen water drain hose.
	Air gap or disposal is clogged.	• Clean air gap or disposal.
	Filters are clogged.	• Clean Filters.
AE	**Water leakage**	• Turn off the water supply to the dishwasher and call an LG Electronics Customer Information Center at 1-800-243-0000 (U.S.A.) or 1-888-542-2623 (Canada). • The dishwasher makes an alert sound for 10 seconds, and runs the drain pump intermittently. If power is turned off to the machine, the machine powers back on automatically until the AE error is resolved.
FE	**Excessive Water supplied.**	• Please call an LG Electronics Customer Information Center at 1-800-243-0000 (U.S.A.) 1-888-542-2623 (Canada).
HE	**Heater circuit failure.**	
tE	**Thermistor failure.**	
LE	**Motor trouble**	
nE	**Vario motor trouble**	

WARRANTY

Should your LG Dishwasher fail due to a defect in materials or workmanship under normal home use, during the warranty period set forth below, LG will at its option repair or replace the product. This limited warranty is valid only to the original retail purchaser of the product and applies only when purchased and used within the United States, including U.S. Territories. Proof of original retail purchase is required to obtain warranty service under this limited warranty.

Warranty Period	Scope of Warranty	HOW SERVICE IS HANDLED
One (1) year from date of original retail purchase	Labor / Parts	LG will also provide, free of charge, all labor and on-site service to replace the defective part.
Five (5) years from date of original retail purchase	Electronics / Racks	Electronic control board and dishwasher racks. Customer will be responsible for any labor or in-home service to replace defective parts.
Ten (10) years from date of original retail purchase	Direct Drive Motor	Direct Drive motor. Customer will be responsible for any labor or in-home service to replace defective parts.
Limited Lifetime	Tub	Stainless steel door liner and tub. Customer will be responsible for any labor or in-home service to replace defective parts.

- Replacement products and parts are warranted for the remaining portion of the original warranty period or ninety (90) days, whichever is greater.
- Replacement products and parts may be new or remanufactured.

THIS WARRANTY IS IN LIEU OF ANY OTHER WARRANTY, EXPRESS OR IMPLIED, INCLUDING WITHOUT LIMITATION, ANY WARRANTY OF MERCHANTABILITY OR FITNESS FOR A PARTICULAR PURPOSE. TO THE EXTENT ANY IMPLIED WARRANTY IS REQUIRED BY LAW, IT IS LIMITED IN DURATION TO THE EXPRESS WARRANTY PERIOD ABOVE. NEITHER THE MANUFACTURER NOR ITS U.S. DISTRIBUTOR SHALL BE LIABLE FOR ANY INCIDENTAL, CONSEQUENTIAL, INDIRECT, SPECIAL, OR PUNITIVE DAMAGES OF ANY NATURE, INCLUDING WITHOUT LIMITATION, LOST REVENUES OR PROFITS, OR ANY OTHER DAMAGE WHETHER BASED IN CONTRACT, TORT, OR OTHERWISE.

Some states do not allow the exclusion or limitation of incidental or consequential damages or limitations on how long an implied warranty lasts, so the above exclusion or limitation may not apply to you. This warranty gives you specific legal rights and you may also have other rights that vary from state to state.

THIS LIMITED WARRANTY DOES NOT COVER:

- Service trips to deliver, pick up, or install or repair the product; instruction to the customer on operation of the product; repair or replacement of fuses or correction of wiring or plumbing, or correction of unauthorized repairs/installation.
- Failure of the product to perform during power failures and interrupted or inadequate electrical service.
- Damage caused by leaky or broken water pipes, frozen water pipes, restricted drain lines, inadequate or interrupted water supply or inadequate supply of air.
- Damage resulting from operating the product in a corrosive atmosphere or contrary to the instructions outlined in the product’s owner’s manual.
- Damage to the product caused by accidents, pests and vermin, lightning, wind, fire, floods, or acts of God.
- Damage or failure caused by unauthorized modification or alteration, or if it is used for other than the intended purpose, or any water leakage where the unit was not properly installed.

- Damage or failure caused by incorrect electrical current, voltage, or plumbing codes, commercial or industrial use, or use of accessories, components, or consumable cleaning products that are not approved by LG.
- Damage caused by transportation and handling, including scratches, dents, chips, and/or other damage to the finish of your product, unless such damage results from defects in materials or workmanship and is reported within one (1) week of delivery.
- Damage or missing items to any display, open box, discounted, or refurbished product.
- Products with original serial numbers that have been removed, altered, or cannot be readily determined. Model and serial numbers, along with original retail sales receipts, are required for warranty validation.
- Increases in utility costs and additional utility expenses.
- Repairs when your product is used for other than normal and usual household use (e.g. commercial use, in offices and recreational facilities) or contrary to the instructions outlined in the product's owner's manual.
- Costs associated with removal of your product from your home for repairs.

Poor wash results caused by debris remaining in the filter.	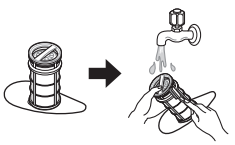	• Clean the filter regularly.
Poor wash results caused by improper loading or over stacking: wash arm won't rotate or soap dispenser is held closed.	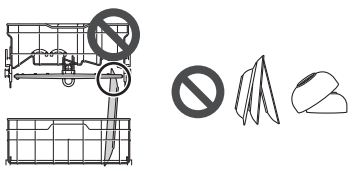	• Make certain that no dishes or utensils are in the path of the spray arms. • Do not place one dish on top of another.
Poor drying results caused by lack of rinse aid.	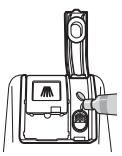	• Use rinse aid or combination detergent.
Water is not supplied because the water tap is not turned on. IE error		• Check and turn on the water tap.
Water is not supplied because the inlet hose is kinked. IE error		• Reinstall the inlet hose.
Not draining because drain hose is kinked. OE error	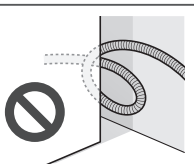	• Reinstall the drain hose.

The knockout plug in the garbage disposal is not removed. OE error	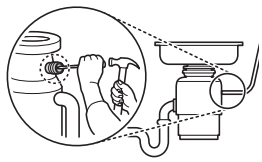	• Remove the plug on the disposal.
The disposal or air gap is blocked by debris. OE error	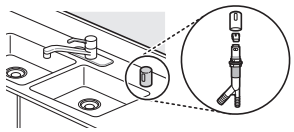	• Clean the disposal or the air gap.
Inlet valve and drain hose connection problem caused by improper installation. External leakage	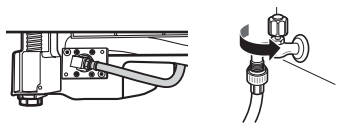	• Reinstall the hose.
Door movement or closing compromised by incorrect leveling.	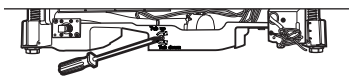	• Adjust the lower front leveling legs to the required height.
No power due to loose connection of power supply line or electrical outlet problem.		• Reconnect the power supply line or repair the electrical outlet.
Pick-up, electrical wiring, plumbing. Installation		• You will be charged for the installation.

The cost of repair or replacement under these excluded circumstances shall be borne by the consumer.

TO OBTAIN WARRANTY SERVICE AND ADDITIONAL INFORMATION

For additional product information, visit the LG website at http://www.lg.com

For assistance using this product or to schedule service, contact LG Electronics at 1-800-243-0000.

For further assistance, write: LG Electronics, 201 James Record Road, Huntsville, Alabama 35813

LG
Life's Good

LG Customer Information Center
For inquiries or comments, visit **www.lg.com** or call: 1-800-243-0000 U.S.A. 1-888-542-2623 CANADA
Register your product Online!
www.lg.com