ENGLISH

OWNER'S MANUAL

MICROWAVE OVEN

Read this owner's manual thoroughly before operating the appliance and keep it handy for reference at all times.

LMC2075**

MFL69962301_00

www.lg.com

Copyright © 2017 LG Electronics Inc. All Rights Reserved.

Thank you for purchasing an LG microwave oven.

Please record the model number and serial number of this unit for future reference. We also suggest you record the details of your contact with LG Electronics U.S.A., Inc. concerning this unit.

Model No: _____

Serial No: _____

Dealer: _____

_____

_____

Dealer Phone No: _____

Staple your receipt here for proof of purchase.

Customer Relations
LG Electronics U.S.A., Inc.
Service Division Bldg. #3
201 James Record Rd.
Huntsville, AL 35824-0126

PRECAUTIONS TO AVOID POSSIBLE EXPOSURE TO EXCESSIVE MICROWAVE ENERGY...

- Do not attempt to operate this oven with the door open since open-door operation can result in harmful exposure to microwave energy. It is important not to defeat or tamper with the safety interlocks.
- Do not place any object between the oven front face and the door or allow soil or cleaner residue to accumulate on sealing surfaces.
- Do not operate the oven if it is damaged.
  It is particularly important that the oven door closes properly and that there is no damage to the:
  (1) door (bent),
  (2) hinges and latches (broken or loosened),
  (3) door seals and sealing surfaces.
- The oven should not be adjusted or repaired by anyone except properly qualified service personnel.

ENGLISH

TABLE OF CONTENTS

4 IMPORTANT SAFETY INSTRUCTIONS

8 PRODUCT OVERVIEW

8 Location of Model Number
8 Electrical Requirements
8 Voltage Warning
8 Placement of the Oven
8 Do Not Block Air Vents
8 Grounding Instructions
9 Radio / TV / Wireless Equipment Interference
9 Oven Specifications
10 Microwave Oven Features
10 Accessories
11 Control Panel Overview

12 MICROWAVE COOKING TIPS

12 Microwave Cookware Guide
13 Microwave-Safe Cookware
14 Microwave Cooking Tips
15 Precautions

16 OPERATION

16 Audible Signals
16 Clock
16 Interrupting Cooking
16 Child Lock
17 Kitchen Timer
17 Quick Start
17 Energy Saving
18 Setting Manual Cooking Times
18 Microwave Power Levels
19 Sensor Operation Instructions
19 Sensor Cooking Guide
19 Sensor Cook
19 Sensor Reheat
19 Sensor Popcorn
20 Sensor Cook Table
21 Sensor Reheat Table
21 Popcorn Table
22 Defrost
22 Defrost Table
23 Defrosting Tips
23 Weight Conversion Table
23 Operating Tips

24 SMART DIAGNOSIS™

24 Using the Smart Diagnosis™ Function

25 MAINTENANCE

25 Caring for the Microwave Oven

26 TROUBLESHOOTING

26 Frequently Asked Questions
27 Before Calling for Service

28 WARRANTY

IMPORTANT SAFETY INSTRUCTIONS

Read and follow all instructions when using the microwave oven to prevent the risk of fire, electric shock, personal injury, or damage. This guide does not cover all possible conditions that may occur. Always contact your service agent or manufacturer about problems that you do not understand.

Download this owner's manual at: http://www.lg.com

This is the safety alert symbol. This symbol alerts you to potential hazards that can result in property damage and/or serious bodily harm or death.
All safety messages will follow the safety alert symbol and either the word WARNING or CAUTION. These words mean:

WARNING - Indicates a hazardous situation which, if not avoided, could result in death or serious injury.

CAUTION - Indicates a hazardous situation which, if not avoided, could result in minor or moderate injury.

The safety instructions below will tell you how to use your oven and avoid harm to yourself or damage to your oven.

WARNING

- To reduce the risk of burns, electric shock, fire, injury to persons or exposure to excessive microwave energy when using the microwave oven, follow basic safety precautions, including the following.
- **Read all the instructions before using the oven.**
- **As with any appliance, close supervision is necessary when used by children.**
- Read and follow the specific **PRECAUTIONS TO AVOID POSSIBLE EXPOSURE TO EXCESSIVE MICROWAVE ENERGY** found on page 2.
- Use this appliance only for its intended use as described in the manual.
  Do not use corrosive chemicals or vapors, such as sulfide and chloride, in this appliance. This type of oven is specifically designed to heat, cook, or dry food. It is not designed for industrial or laboratory use.
- **Do not store** this appliance outdoors. Do not use this product near water - for example, near a kitchen sink, in a wet basement, near a swimming pool, or similar location.
- **Do not use this oven for commercial purposes.** It is made for household use only.
- **When cleaning surfaces of door and oven that come together on closing the door, use only mild, nonabrasive soaps, or detergents applied with a sponge or soft cloth.**
- **If your oven is dropped or damaged,** have it thoroughly checked by a qualified service technician before using it again.

WARNING

- **To reduce the risk of fire in the oven cavity:**
  - **Do not overcook food.** Carefully attend to the microwave oven when paper, plastic or other combustible materials are placed inside the oven to facilitate cooking.
  - **Do not use the cavity for storage purposes.**
    Do not leave paper products, cooking utensils or food in the cavity when not in use.
  - Remove wire twist-ties from paper or plastic bags before placing bags in oven.
- **If materials inside the oven ignite:**
  - **Keep oven door closed**
  - **Turn the oven off**
  - **Disconnect the power cord or shut off power at the fuse or circuit breaker panel.**
- **To avoid electric shock:**
  - **This appliance must be grounded.** Connect only to a properly grounded outlet. See the electrical **GROUNDING INSTRUCTIONS** on page 8.
  - **Do not operate this appliance if it has a damaged cord or plug,** if it is not working properly or if it has been damaged or dropped.
  - **Do not immerse the electrical cord or plug in water.**
  - **Keep cord away from heated surfaces.**
  - **Do not let cord hang over edge of table or counter.**
- **Take care when the door is opened to avoid injury.**
- **To avoid improperly cooking some foods:**
  - **Do not heat any type of baby bottle or baby food.** Uneven heating may occur and possibly cause personal injury.
  - **Do not heat small-necked containers,** such as syrup bottles.
  - **Do not deep-fat fry in the microwave oven.**
  - **Do not attempt home canning in the microwave oven.**
  - **Some products such as whole eggs and sealed containers – for example, closed glass jars – are able to explode and should not be heated in this oven.**
- Do not cover or block any openings on the appliance.
- Do not run the oven empty.
- Install or locate this appliance only in accordance with the provided installation instructions.
- This appliance should be serviced only by qualified service personnel. Contact the nearest authorized service facility for examination, repair, or adjustment.
- Liquids, such as water, coffee, or tea can be overheated beyond the boiling point without appearing to be boiling due to surface tension of the liquid. Visible bubbling or boiling when the container is removed from the microwave oven is not always present.

THIS COULD RESULT IN VERY HOT LIQUIDS SUDDENLY BOILING OVER WHEN THE CONTAINER IS DISTURBED OR A SPOON OR OTHER UTENSIL IS INSERTED INTO THE LIQUID.

- To reduce the risk of injury to persons;
  - Do not overheat the liquid.
  - Stir the liquid both before and halfway through heating it.
  - Do not use straight-sided containers with narrow necks.
  - After heating, allow the container to stand in the microwave oven for a short time before removing the container.
  - Use extreme care when inserting a spoon or other utensil into the container.

WARNING

- Do not use the oven for the purpose of dehumidification (for example, operating the microwave oven with wet newspapers, clothes, toys, electric devices, plants, soil, pets or any other living matter inside it). The oven must only be used for heating or cooking food.
  - The results of misuse can include safety risks such as fire, burns, or death due to electric shock.
- This appliance is not intended for use by persons (Including children) with reduced physical, sensory or mental capabilities, or lack of experience and knowledge, unless they have been given supervision or instruction concerning use of the appliance by a person responsible for their safety. Children should be supervised to ensure that they do not play with the appliance.
  - Improper use may cause damage such as a fire, electric shock or burn.
- Accessible parts may become hot during use. Young children should be kept away.
  - They may be burned.
- Children must not be allowed to play with accessories or hang down from the door or any part of the oven.
  - Doing so can cause serious injury and damage.
- If the door or door seals are damaged, the oven must not be operated until it has been repaired by a competent person.
- The appliance and its accessible parts become hot during use. Care should be taken to avoid touching heating elements. Children shall be kept away unless continuously supervised.
- During use the appliance becomes hot. Care should be taken to avoid touching heating elements inside the oven.
- Do not use recycled paper products.
  - They may contain impurities which may cause sparks and/or fires when used in cooking.
- Do not rinse trays and racks by placing them in water just after cooking. This may cause breakage or damage.
  - Improper use could result in damage to the oven.
- The oven should be cleaned regularly and any food deposits should be removed.
  - Failure to maintain the oven in a clean condition could lead to deterioration of the surface that could adversely affect the life of the appliance and possibly result in a hazardous situation.
- The door or the outer surface may get hot when the appliance is operating.
- Liquids heated in certain shaped containers (especially cylindrical-shaped containers) may become overheated. The liquid may splash out with a loud noise during or after heating or when adding ingredients (instant coffee. etc.), resulting in harm to the oven and possible injury. In all containers, for best results, stir the liquid several times before heating. Always stir liquid several times between reheatings.

FEDERAL COMMUNICATIONS COMMISSION RADIO FREQUENCY INTERFERENCE STATEMENT (U.S.A. ONLY)

This equipment generates and uses ISM frequency energy and if not installed and used properly, that is in strict accordance with the manufacturer's instructions, may cause interference to radio and television reception. It has been type tested and found to comply with limits for ISM Equipment pursuant to part 18 of FCC Rules, which are designed to provide reasonable protection against such interference in a residential installation.

However, there is no guarantee that interference will not occur in a particular installation. If this equipment does cause interference to radio or television reception, which can be determined by turning the equipment off and on, the user is encouraged to try to correct the interference by one or more of the following:

- Reorient the receiving antenna of the radio or television.
- Relocate the Microwave Oven with respect to the receiver.
- Move the microwave oven away from the receiver.
- Plug the microwave oven into a different outlet so that the microwave oven and the receiver are on different branch circuits.

The manufacturer is not responsible for any radio or TV interference caused by unauthorized modification to this microwave oven. It is the responsibility of the user to correct such interference.

WARNING

This product contains chemicals known to the State of California to cause cancer and birth defects or other reproductive harm. ***Wash hands after handling.***

Read all instructions before using the appliance.

SAVE THESE INSTRUCTIONS

PRODUCT OVERVIEW

Location of Model Number

To request service information or replacement parts, the service center requires the complete model number of your microwave oven. The model number is on the oven back as shown in the illustration below.

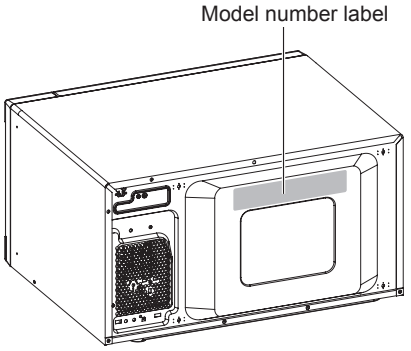

Electrical Requirements

The oven is designed to operate on a Standard 120 V/60 Hz household outlet. Be sure the circuit is at least 15 A or 20 A and the microwave oven is the only appliance on the circuit. It is not designed for 50 Hz or any circuit other than a 120 V/60 Hz circuit.
No other electrical appliances or lighting circuits should be on this line. If in doubt, consult a licensed electrician.

Voltage Warning

The voltage used at the wall receptacle must be the same as specified on the oven name plate located on the back or on the side of the control panel of the oven. Use of a higher voltage is dangerous and may result in a fire or other type of accident causing oven damage. Low voltage will cause slow cooking. If the microwave oven does not perform normally in spite of proper voltage, remove and reinsert the plug.

Placement of the Oven

The microwave oven can be placed easily in your kitchen, family room, or anywhere else in your home. Place the oven on a flat surface such as a kitchen countertop or a specially designed microwave oven cart. Do not place oven above a gas or electric range. Free airflow around the oven is important. Allow at least 4 inches of space at the top, sides, and back of the oven for proper ventilation.

Do Not Block Air Vents

All air vents should be kept clear during cooking. If air vents are covered during oven operation the oven may overheat. If this happens, a sensitive thermal safety device automatically turns the oven off. The oven will be inoperable until it has cooled sufficiently.

Grounding Instructions

This appliance must be grounded. In the event of an electrical short circuit, grounding reduces the risk of electric shock by providing an escape wire for the electric current. This appliance is equipped with a cord having a grounding wire with a grounding plug. The plug must be plugged into an outlet that is properly installed and grounded.

WARNING

- **Improper use of grounding can result in a risk of electric shock.**

Consult a qualified electrician or service person if the grounding instructions are not completely understood, or if doubt exists as to whether the appliance is properly grounded.

1. Use of an extension cord is not recommended. If the power supply cord is too short, have a qualified electrician or service person install an outlet near the appliance.
2. If it is necessary to use an extension cord, use only a 3-wire extension cord that has a 3-blade grounding plug, and a 3-slot receptacle that will accept the plug on the appliance. The marked rating of the extension cord must be equal to or greater than the electrical rating of the appliance.

NOTE

- A short power supply cord is provided to reduce the risks resulting from becoming entangled in or tripping over a longer cord.
- Longer cord sets or extension cords are available and may be used if care is exercised in their use.
- If a long cord or extension cord is used, (1) the marked electrical rating of the cord set or extension cord must be at least as great as the electrical rating of the appliance, (2) the extension cord must be a grounding-type 3-wire cord, and (3) the longer cord should not be draped over a counter or table where children could pull on it, or located where it could present a trip hazard.

See the separate Installation Instructions for directions on placing the cord properly.

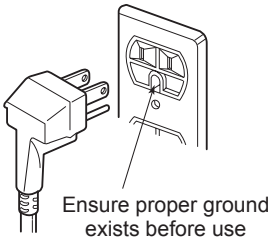

Keep the electrical power cord dry and do not pinch or crush it in any way.

Radio / TV / Wireless Equipment Interference

Operating the microwave oven near equipment—such as a radio, TV, wireless LAN, Bluetooth devices, medical equipment, or wireless equipment—which uses the same frequency, may cause interference. This interference is not an indication of a defect in the product or its operation. The product is safe to use.

WARNING

- Do not use medical equipment near the microwave oven, as the interference could affect the medical equipment's operation.

When there is interference, it may be reduced or eliminated by taking the following measures:

a. Clean the door and the sealing surfaces of the oven.

b. Reorient the receiving antenna of the radio, TV, Bluetooth, or other equipment.

c. Relocate the microwave oven in relation to the radio, TV, Bluetooth, or other equipment.

d. Move the microwave oven away from the receiver.

e. Plug the microwave oven into a different outlet so that microwave oven and receiver are on different branch circuits.

Oven Specifications

Model	LMC2075**
Power Supply	120 V AC, 60 Hz
Rated Power Consumption	1200 W
Microwave Output	Max. 1200 W*
Frequency	2450 MHz
Rated Current	10.0 A
Overall Dimensions (W x H x D)	23 7/8" x 13 9/16" x 19 13/16" (60.6 cm x 34.4 cm x 50.3 cm)
Oven Cavity Dimensions (W x H x D)	16 11/16" x 11 1/4" x 18 1/16" (42.4 cm x 28.6 cm x 45.9 cm)
Capacity of Oven Cavity	2.0 cu.ft. (0.06 m³)

*IEC 60705 RATING STANDARD
Specifications subject to change without prior notice.

Microwave Oven Features

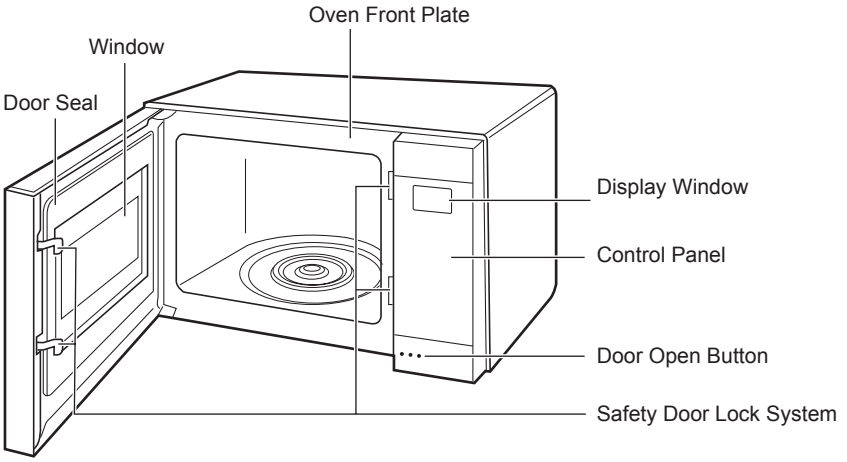

NOTE

To open the door, push the door open button, shown above.

Accessories

Your oven comes with the following accessories.

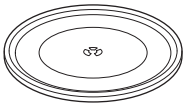

Glass Tray

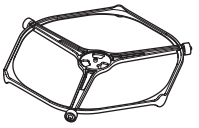

Rotating ring

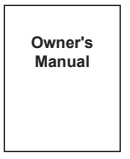

Owner's Manual

NOTE

This microwave oven is designed for household use only. It is not recommended for commercial use.

Control Panel Overview

Use the control panel to select the desired cooking function quickly and easily. Simply touch a command key to select the desired function. **For more information on these features, see the OPERATION** section.

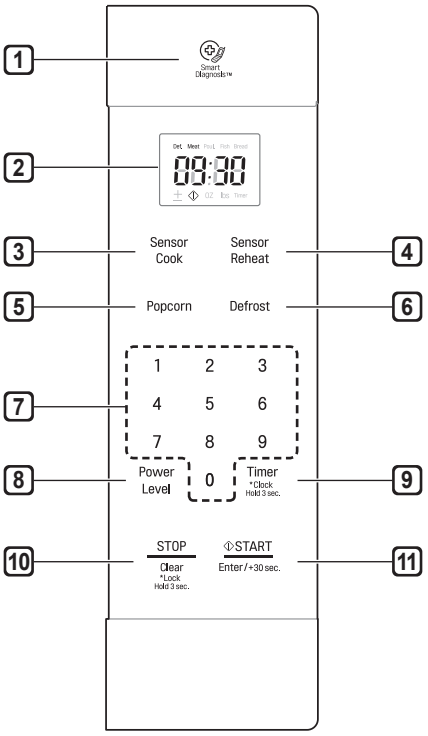

1 Smart Diagnosis

Hold the mouthpiece of a phone up to this icon when directed to by service center personnel, to help diagnosis problems with the oven when calling for service.

2 Display

The display includes a clock and shows the time of day, cooking time settings, and selected cooking functions.

3 Sensor Cook

Touch this key to cook potatoes, frozen vegetables, fresh vegetables, frozen entrées, bacon, oatmeal, and rice without having to select cooking times and power levels.

4 Sensor Reheat

Touch this key to reheat beverages, casseroles, pizza, dinner plates, and pies without having to select cooking times and power levels.

5 Popcorn

Touch this key to pop popcorn without having to select cooking times and power levels.

6 Defrost

Touch this key to defrost meat, poultry, fish, and bread.

7 Number Keys

Touch number keys to enter cooking time, power level, quantities, or weights.

8 Power Level

Touch this key to set a cooking power.

9 Timer / Clock

- Touch this key to use your microwave oven as a kitchen timer.
- Press and hold this key for 3 seconds to set the time of day.

10 Stop / Clear / Lock

- Touch this key to stop the oven or clear all entries.
- Press and hold this key for 3 seconds to lock the control panel.

11 START/Enter/+30 sec.

- Touch this key to start the oven or enter amounts.
- Touch this key to cook at 100% cook power for 30 seconds.
- Touch this key during cooking to increase cook time by 30 seconds. Touch repeatedly to add up to 99 minutes 59 seconds.

MICROWAVE COOKING TIPS

Microwave Cookware Guide

Use	Do Not Use
OVENPROOF GLASS (treated for high intensity heat): utility dishes, loaf dishes, pie plates, cake plates, liquid measuring cups, casseroles and bowls without metallic trim.	**METAL CONTAINERS:** Metal shields the food from microwave energy and produces uneven cooking. Also avoid metal skewers, thermometers, or foil trays. Metal containers can cause arcing, which can damage the microwave oven.
CHINA: bowls, cups, serving plates, and platters without metallic rim.	**METAL DECORATION:** Metal-rimmed or metal-banded dinnerware, casserole dishes, etc. The metal rim interferes with normal cooking and may damage the oven.
PLASTIC: Plastic wrap (as a cover)- lay the plastic wrap loosely over the dish and press it to the sides. Vent plastic wrap by turning back one edge slightly to allow excess steam to escape. The dish should be deep enough so that the plastic wrap will not touch the food. As the food heats it may melt the plastic wrap wherever the wrap touches the food. Use plastic dishes, cups, semi-rigid freezer containers and plastic bags only for short cooking times. **Use these with care because the plastic may soften from the heat of the food.**	**ALUMINUM FOIL:** Avoid large sheets of aluminum foil because they hinder cooking and may cause harmful arcing. Use small pieces of foil to shield poultry legs and wings. Keep ALL aluminum foil at least 1 inch from the side walls and door of the oven. **WOOD:** Wooden bowls and boards will dry out and may split or crack when you use them in the microwave oven. Baskets react in the same way. **TIGHTLY COVERED COOKWARE:** Be sure to leave openings for steam to escape from covered containers. Pierce plastic pouches of vegetables or other food items before cooking. Tightly closed pouches could explode.
PAPER: Paper towels, waxed paper, paper napkins, and paper plates with no metallic trim or design. Look for the manufacturer's label for use in the microwave oven.	**BROWN PAPER:** Avoid using brown paper bags. They absorb too much heat and could burn.
Note: Do not use recycled paper products in the microwave oven. They sometimes contain impurities that cause arcing and sparking.	**FLAWED OR CHIPPED COOKWARE:** Any container that is cracked, flawed, or chipped may break in the oven. **METAL TWIST TIES:** Remove metal twist ties from plastic or paper bags. They become hot and could cause a fire.

Microwave-Safe Cookware

Never use metal or metal-rimmed cookware in the microwave oven.

Microwaves cannot penetrate metal. They will bounce off any metal object in the oven and cause arcing, an alarming phenomenon that resembles lightning. Most heat resistant non-metallic cookware is safe for use in your oven. However, some may contain materials that render it unsuitable as microwave cookware. If you have any doubts about a particular container, there's a simple way to find out if it can be used in the microwave.

Testing Cookware before Use

Place the container in question next to a glass bowl filled with water inside the oven. Microwave at HIGH power for 1 minute. If the water heats up but the container remains cool to the touch, the container is microwave-safe.

However, if the water does not change temperature but the container becomes warm, microwaves are being absorbed by the container and it is not safe for use in the microwave oven. See the following list for tips on using common items when microwave cooking.

Tableware

Many dishes are microwave-safe. If in doubt consult the manufacturer's literature or perform the microwave test. Do not put plates with painted decoration in the oven, as the paint may contain metal and cause arcing.

Glassware

Glassware that is heat-resistant is microwave-safe. This includes all brands of oven tempered glass cookware.

Do not use delicate glassware, such as tumblers or wine glasses, as these might shatter when heated.

Plastic Storage Containers

Use these only for quick reheating of food. Do not use them when cooking food for long periods or at high power levels, as the hot food will eventually warp or melt the plastic.

Paper

Paper plates and containers are convenient and safe to use in the microwave oven, provided that the cooking time is short and foods to be cooked are low in fat and moisture. Paper towels are also very useful for wrapping foods and for lining baking trays in which greasy foods such as bacon are cooked. In general, avoid colored paper products as the color may run. Some recycled paper products may contain impurities which could cause arcing or fires when used in the microwave.

Plastic Cooking Bags

Provided they are made specially for cooking, cooking bags are microwave safe. Remember to make a slit in the bag so that steam can escape. Never use ordinary plastic bags for cooking in the microwave oven, as they will melt and rupture.

Plastic Microwave Cookware

A variety of shapes and sizes of microwave cookware are available. You may be able to use items you already have on hand rather than investing in new kitchen equipment.

Pottery, Stoneware, and Ceramic

Many containers made of these materials are microwave-safe, but test them before use.

CAUTION

- Some items with high lead or iron content are not suitable for microwave cooking.
- Cookware should be checked to ensure that it is suitable for use in the microwave.

Microwave Cooking Tips

Keeping an Eye on Things

Always watch your food while it cooks. The light inside the microwave oven turns on automatically when the oven is cooking so you can monitor the cooking process. Directions given in recipes to elevate, stir, and the like should be thought of as the minimum steps recommended. If the food seems to be cooking unevenly, simply make the necessary adjustments you think appropriate to correct the problem.

Factors Affecting Microwave Cooking Times

Many factors affect cooking times. The temperature of ingredients used in a recipe makes a big difference in cooking times. For example, a cake made with ice-cold butter, milk, and eggs will take considerably longer to bake than one made with ingredients that are at room temperature. Some recipes, particularly those for bread, cake, and custards, recommend that food be removed from the oven when they are slightly undercooked.

This is not a mistake. When allowed to stand, usually covered, these foods will continue to cook outside of the oven as the heat trapped within the outer portions of the food gradually travels inward. If the food is left in the oven until it is cooked all the way through, the outer portions will become overcooked or even burnt. Practice will improve your ability to estimate both cooking and standing times for various foods.

Density of Food

Light, porous food such as cakes and breads cook more quickly than heavy, dense foods such as roasts and casseroles. You must take care when microwaving porous food so that the outer edges do not become dry and brittle.

Height of Food

The upper portion of tall foods, particularly roasts, will cook more quickly than the lower portion.

Therefore, it is wise to turn tall food several times during cooking.

Moisture Content of Food

Because the heat generated from microwaves causes moisture to evaporate, relatively dry food such as roasts and some vegetables should either be sprinkled with water prior to cooking or covered to retain moisture.

Bone and Fat Content of Food

Bones conduct heat and fat cooks more quickly than meat. Care must be taken when cooking bony or fatty cuts of meat in order to prevent unevenly cooked or overcooked meat.

Quantity of Food

The number of microwaves in your oven remains constant regardless of how much food is being cooked. Therefore, the more food you place in the oven, the longer the required cooking time. Remember to decrease cooking times by at least one third when halving a recipe.

Shape of Food

Microwaves penetrate only about 3/4 of an inch (2 cm) into food. The interior portion of thick foods is cooked as the heat generated on the outside travels inward. Only the outer edge of food is cooked by microwave energy; the rest is cooked by conduction. The worst possible shape for a food that is to be microwaved is a thick square.

The corners will burn long before the center is even warm. Round thin foods and ring-shaped foods cook most successfully in the microwave.

Covering

A cover traps heat and steam which causes food to cook more quickly. Use a lid or microwave cling film with a corner folded back to prevent splitting.

Covering with Parchment Paper

Parchment paper (not waxed paper) is microwave safe. Because it makes a looser cover than a lid or clingfilm, greaseproof paper allows the food to dry out slightly.

Stirring

Stirring is one of the most important of all microwaving techniques. In conventional cooking, food is stirred for the purpose of blending. Microwaved food, however, is stirred in order to spread and redistribute heat. Always stir from the outside towards the centre as the outside of the food heats first.

Placing Thicker Portions Facing Outward

Place thicker cuts or portions of meat, poultry, and fish toward the outer edge of the baking dish so they absorb the most microwave energy and the food cooks more evenly.

Shielding

Strips of aluminium foil (which block microwaves) can be placed over the corners or edges of square and rectangular foods to prevent those portions from overcooking. Never use too much foil and make sure the foil is secured to the dish or it may cause arcing in the oven especially if the foil passes too closely to the walls of the oven during rotation.

Elevating

Thick or dense foods can be elevated so that microwaves can be absorbed by the underside and center of the foods.

Piercing

Foods enclosed in a shell, skin or membrane are likely to burst in the oven unless they are pierced prior to cooking. Such foods include yolks and whites of eggs, clams, oysters, potatoes, and other whole vegetables and fruits.

Testing if Cooked

Microwaves cook food quickly, so test food for doneness frequently. Some foods are left in the microwave until completely cooked, but most foods, including meats and poultry, should be removed from the oven while still slightly undercooked and allowed to finish cooking during standing time. The internal temperature of foods will rise between 5 °F (3 °C) and 15 °F (8 °C) during standing time.

Standing Time

Foods are often allowed to stand for 3 to 10 minutes after being removed from the oven. Usually the foods are covered during standing time to retain heat unless they are supposed to be dry in texture. Standing allows foods to finish cooking and also helps flavors blend and develop.

Precautions

- Place the front surface of the door three inches or more from the countertop edge to avoid accidental tipping of the microwave oven during normal use.
- To program the oven, make sure you touch the center of each pad firmly since the areas between the pads will not activate the oven. A tone will sound each time a pad is touched correctly. Don’t touch several pads at once.
- Do not strike the control panel with silverware, utensils, etc. Breakage may occur.
- Always use caution when taking cookware out of the oven. Some dishes absorb heat from the cooked food and may be hot. See Cookware Guide earlier in this section for more information.
- Do not rinse containers by placing them in water immediately after cooking. This may cause breakage. Also, always allow the turntable to cool before removing it from the oven.
- Never operate the oven when it is empty. Food or water should always be in the oven during operation to absorb the microwave energy.
- Do not use the oven to dry newspapers or clothes. They may catch fire.
- Use thermometers that have been approved for microwave oven cooking.
- The turntable must always be in place when you operate the oven.
- Do not use your microwave oven to cook eggs in the shell. Pressure can build up inside the shell, causing it to burst.
- There are several precautions to follow when microwaving popcorn:
  - Do not pop popcorn, except in a microwave-safe container or commercial packages designed for microwave ovens.
  - Never try to pop popcorn in a paper bag that is not microwave-approved.
  - Overcooking may result in smoke and fire.
  - Do not repop unpopped kernels.
  - Do not reuse popcorn bags.
  - Listen while corn pops. Stop oven when popping slows to 2-3 seconds between pops.
  - Do not leave microwave unattended while popping corn.
  - Follow directions on bag.

OPERATION

This section introduces you to the basics you need to know to operate the microwave oven. Please read this information before using the oven.

CAUTION

To avoid risk of personal injury or property damage, do not use stoneware, metal cookware, or metal rimmed cookware in the oven.

Audible Signals

Audible signals are available to guide you when setting and using the oven:

- A tone will sound each time you touch a key.
- A melody signals the end of a Timer countdown.
- A melody signals the end of a cooking cycle.

CAUTION

To avoid risk of personal injury or property damage, do not run oven while it is empty.

Clock

When the oven is plugged in for the first time or when power resumes after a power interruption, the clock defaults to the 12-hour clock mode and 12H appears in the display. You can set the time or switch to the 24-hour clock mode.

Setting the Clock for 10:30 AM

1. Touch **STOP/Clear**.
2. Touch and hold **Timer/Clock** until **12H** appears in the display (approximately 3 seconds).
3. Touch **START/Enter/+30 sec.**
4. Touch the Number keys to set the time (1, 0, 3, and 0).
5. Touch **START/Enter/+30 sec**.

NOTE

- You can switch between a 12-hour and 24-hour clock mode by touching **Timer/Clock** after step 2.
- **To reset the clock mode, you must unplug and reconnect the power cord.**
- If you don't want the time of day to appear in the display, press the **STOP/Clear** button, after plugging in the oven.

Interrupting Cooking

Stop the oven during a cycle by opening the door. The oven stops heating and the fan stops, but the light stays on. To restart cooking, close the door and touch **START/Enter/+30 sec.**

To stop cooking and clear the remaining cook time, open the door and touch STOP/Clear.

Child Lock

Use this safety feature to lock the control panel and prevent the oven from being turned on when cleaning the oven or prevent children from unsupervised use of the oven.

Setting Child Lock to ON

1. Touch **STOP/Clear**.
2. Touch **STOP/Clear** and hold until Loc appears in the display (approximately 3 seconds).

Cancelling Child Lock

1. Touch **STOP/Clear** and hold until Loc disappears in the display (approximately 3 seconds).

NOTE

- If set, the time of day reappears in the display after 1 second.
- If the oven is locked, Loc appears in the display when any key is touched.
- Unlock the oven to resume normal use.

Kitchen Timer

The Timer function serves as an extra kitchen timer. It chimes when the set time runs out. It does not start or stop cooking.

Setting Timer for 3 Minutes

1 Touch **Timer/Clock**.

2 Touch the Number keys to set the time (3, 0, and 0).

3 Touch **START/Enter/+30 sec**. Time counts down in display.

Cancelling the Timer

1 Touch **Timer/Clock**.

NOTE

- When the time is over a melody sounds and End displays. Press **Clear**.

Quick Start

The Quick Start feature allows you to set 30-second intervals of High power cooking with each touch of the **START/Clear/+30 sec.** button.

Cooking for 2 Minutes on High Power

1 Touch **STOP/Clear**.

2 Touch **START/Enter/+30 sec**. four times. The oven starts cooking and the time counts down in the display.

NOTE

- The oven will immediately start cooking for 30 seconds on high power.
- Press **START/Enter/+30 sec.** repeatedly to extend the cook time by 30 seconds every time the button is pressed.
- The cook time can be extended to 99 minutes and 59 seconds.

Energy Saving

When the oven is not in use, the display turns off to save energy, **unless the time of day is set to show in the display.**

Setting Manual Cooking Times

When not using the auto cooking functions, the cooking time and power level are set manually.

Cooking for 5 Minutes, 30 Seconds at 80% Power

1 Touch **STOP/Clear**.

2 Touch the Number keys to set the time (5:30).

3 Touch **Power Level**.

4 Touch the number 8 key to select power level 8.

5 Touch **START/Enter/+30 sec**.

- When cooking is complete, a chime sounds and "End" appears in the display window. "End" remains in the display and the chime repeats every minute until the door is opened, or any button is pressed.

NOTE

- If a power level is not selected, the oven defaults to 100% power.

Microwave Power Levels

This microwave oven is equipped with 11 power levels to give you maximum flexibility and control over cooking. See the table for suggested power levels for various foods.

Microwave Power Level Chart

Power Level	Use
P-HI (100 %)	• Boiling water. • Browning ground beef. • Making candy. • Cooking poultry pieces, fish, & vegetables. • Cooking tender cuts of meat.
P-90	• Reheating rice, pasta, & vegetables.
P-80	• Reheating prepared foods quickly. • Reheating sandwiches.
P-70	• Cooking egg, milk and cheese dishes. • Melting chocolate.
P-60	• Cooking veal. • Cooking whole fish. • Cooking puddings and custard.
P-50	• Cooking ham, whole poultry and lamb. • Cooking rib roast and sirloin tip.
P-40	• Thawing meat, poultry and seafood.
P-30	• Cooking less tender cuts of meat. • Cooking pork chops and roasts.
P-20	• Taking chill out of fruit. • Softening butter.
P-10	• Keeping casseroles and main dishes warm. • Softening butter and cream cheese.
P-00	• Standing time.

Sensor Operation Instructions

This microwave oven has sensor cooking features for convenient microwave cooking. It guides you, step by step, to reheat or cook popular food items automatically using preprogrammed settings.

Categories :

1. Sensor Cook
2. Sensor Reheat
3. Popcorn

- The Sensor system works by detecting built up steam.
- Make sure the door remains closed.
- Opening the door or touching the **STOP/Clear** key before the steam is detected will stop the process and the oven.
- Before using sensor cooking, make sure the exterior of the reheating container and the interior of the oven are dry, to assure the best results.

Sensor Cooking Guide

Appropriate containers and coverings help assure good sensor cooking results.

- Always use microwavable containers and cover them with lids or vented plastic wrap.
- Never use tight-sealing plastic covers. They can prevent steam from escaping and cause food to overcook.
- Match the amount to the size of the container. Fill containers at least half full for best results.
- Be sure the outside of the cooking container and the inside of the microwave oven are dry before placing food in the oven. Beads of moisture turning into steam can mislead the sensor.

Sensor Cook

SENSOR COOK allows you to cook some of your favorite foods without having to select cooking times and power levels. The oven automatically adjusts cooking times for many food items.

Cooking a Potato

1. Touch **STOP/Clear**.
2. Touch **Sensor Cook** repeatedly until **Sc-6** (for cooking potatoes) appears in the display.
3. Touch **START/Enter/+30 sec**. The oven will start automatically.

Sensor Reheat

This feature reheats single servings of previously cooked foods or a plate of leftovers. Preprogrammed items include:

1. Beverage
2. Casserole
3. Dinner Plate
4. Pie
5. Pizza

Reheating a Casserole

1. Touch **STOP/Clear**.
2. Touch **Sensor Reheat** twice to select **Sr-2** (casserole).
3. Touch **START/Enter/+30 sec**. The oven will start automatically.

Sensor Popcorn

Prepare microwave popcorn simply and easily... **one bag at a time**.

Sensor Popcorn only uses HI (100%) power.
The popping time counts down in the display.
When the countdown ends, a melody sounds and "End" appears in the display. The oven turns off automatically.

Place one bag only (50–100g) of prepackaged microwave popcorn on a microwave-safe / oven-safe dish on the turntable. The package should be at room temperature.

1. Touch **STOP/Clear**.
2. Touch **Popcorn**.
3. Touch **START/Enter/+30 sec**. The oven will start automatically.

Sensor Cook Table

<table>
<tr><th>Code</th><th>Category</th><th>Recommended Amounts</th><th>Directions</th></tr>
<tr><td>Sc-1</td><td>Bacon</td><td>2 - 4 slices</td><td>Place bacon slices on a microwave bacon rack for best results.
(Use dinner plate lined with paper towels if rack is not available.)</td></tr>
<tr><td>Sc-2</td><td>Fresh Vegetable</td><td>1 - 4 cups</td><td>Place in a microwaveable bowl or casserole. Add water according to the quantity.
• 1-2 cups : add 2 tbsp water.
• 3-4 cups : add 4 tbsp water.
Cover with vented plastic wrap.
Let stand 3 minutes after cooking.</td></tr>
<tr><td>Sc-3</td><td>Frozen Entree</td><td>10 - 40 oz.</td><td>Remove from outer display package. Slit cover. If not in microwave-safe container, place on a microwaveable plate and cover with vented plastic wrap. After cooking, let stand in microwave oven 3 minutes.</td></tr>
<tr><td>Sc-4</td><td>Frozen Vegetable</td><td>1 - 4 cups</td><td>Place in a microwaveable bowl or casserole.
• 1-2 cups : add 2 tbsp water.
• 3-4 cups : add 4 tbsp water.
Cover with vented plastic wrap.
Let stand 3 minutes after cooking.</td></tr>
<tr><td>Sc-5</td><td>Oatmeal</td><td>1 - 2 servings</td><td><table><tr><th></th><th>1 serving</th><th>2 servings</th></tr><tr><td>Oats</td><td>½ cup (40 g)</td><td>1 cup (80 g)</td></tr><tr><td>Water or Milk</td><td>1 cup (230 g)</td><td>1 ½ cup (345 g)</td></tr><tr><td>Salt (optional)</td><td>Dash</td><td>1/8 tsp.</td></tr></table>Combine water or milk, salt and oats in large microwave-safe bowl.
Cover with vented plastic wrap.
Let stand 3 minutes after cooking.</td></tr>
<tr><td>Sc-6</td><td>Potato</td><td>1 - 4 ea</td><td>Pierce skin with a fork and place on paper towel. Do not cover.
Let stand 5 minutes after cooking.</td></tr>
<tr><td>Sc-7</td><td>Rice</td><td>½ - 2 cups</td><td><table><tr><th></th><th>½ cup</th><th>1 cup</th><th>1 ½ cup</th><th>2 cups</th></tr><tr><td>Rice</td><td>½ cup (96 g)</td><td>1 cup (192 g)</td><td>1 ½ cup (288 g)</td><td>2 cups (384 g)</td></tr><tr><td>Water</td><td>1 cup (230 g)</td><td>2 cups (460 g)</td><td>3 cups (690 g)</td><td>4 cups (920 g)</td></tr></table>Add rice and water in a deep and large microwave-safe bowl (3 qt./3 L).
Cover with vented plastic wrap.
Let stand 5-10 minutes after cooking.</td></tr>
</table>

Sensor Reheat Table

Code	Category	Recommended Amounts	Directions
Sr-1	**Beverage**	1 - 2 cups (240 ml per cup)	Use a mug or microwave-safe cup. Do not cover. Stir after reheating. (Be careful! The beverage will be very hot. Sometimes liquids heated in cylindrical containers will splash out unexpectedly when the cup is moved.)
Sr-2	**Casserole**	10 - 20 oz	Place in a microwaveable bowl or casserole. Cover with vented plastic wrap. Let stand 3 minutes after heating.
Sr-3	**Dinner plate**	1	Place food on a plate. Cover with vented plastic wrap. Let stand 3 minutes after heating.
Sr-4	**Pie**	10 - 20 oz	Cut leftover pie into pieces. Place food on a microwave-safe dish. Place food in the oven. Choose the menu and weight, press Start.
Sr-5	**Pizza**	1 - 3 slices	This is a reheat function for leftover pizza. Do not use to cook pizza. Place on paper towel on a microwave safe plate.

NOTE

- Do not use recycled paper products in the microwave oven.
  They sometimes contain impurities that cause arcing and sparking.

Popcorn Table

Code	Category	Recommended Amounts	Directions
Pop	**Popcorn**	3.5 oz.	Pop only one package at a time. For best results, use a fresh bag of popcorn. Place a bag of prepackaged microwave popcorn on the center of the glass tray.

NOTE

- If popcorn bag size is not known, follow manufacturers' instructions and do not use this feature.
- Do not use POPCORN key pad in combination with any other feature key pads.
- Do not attempt to reheat or cook any unpopped kernels.
- Do not reuse bag. Overcooking can result in an oven fire.
- Prepare only one bag at a time.
- Do not use popcorn popping devices in microwave oven with this feature.
- Do not leave microwave unattended while cooking popcorn.

CAUTION

Never use a brown paper bag for popping corn.

When popping prepackaged popcorn, place the bag carefully in the oven so it does not touch the walls as it rotates. Fold the ends of the bag up and toward the center of the bag as shown.

Defrost

The oven has 4 preset defrost cycles.
The defrost feature provides the best defrosting method for frozen foods. The Defrost Table shows the suggested defrost cycle for various foods.

The Defrost function conveniently chimes partway through the defrost cycle to remind you to check, turn over, separate, or rearrange the food for best results.

1 MEAT

2 POULTRY

3 FISH

4 BREAD

Defrosting 1.2 Lb of Ground Beef

1. Touch **STOP/Clear**.
2. Touch **Defrost** once to select Meat.
3. Touch **START/Enter/+30 sec**.
4. Touch the Number keys to set the weight (1 and 2 for 1.2 lbs).
5. Touch **START/Enter/+30 sec**. The time counts down in the display.

NOTE

- The countdown appears in the display after **START/Enter/+30 sec.** is pressed. The oven chimes once, partway through the defrost cycle.
- At the chime, open the oven door and turn the food over. Remove any food that has thawed. Return the still frozen items to the oven and press **START/Enter/+30 sec.** to complete the defrost cycle.

Defrost Table

Category	Food to be Defrosted
MEAT (dEF1) 0.1 - 6.0 lbs	**Beef** Ground beef, round steak, stew cubes, tenderloin steak, pot roast, rib roast, rump roast, chuck roast, hamburger patties **Lamb** Chops, rolled roast **Pork** Chops, hotdogs, spareribs, country-style ribs, rolled roast, sausage **Veal** Cutlets (1 lb, ½ inch thick) Turn food over at beep. After defrosting, let stand for 5 - 15 minutes.
POULTRY (dEF2) 0.1 - 6.0 lbs	**Poultry** Whole, cut-up, breast (boneless). Rinse chicken cavity with tap water and let stand for 60 minutes after cooking for better results. **Cornish Hens** Whole **Turkey** Breast Turn food over at beep. After defrosting , let stand for 60 minutes.
FISH (dEF3) 0.1 - 4.0 lbs	**Fish** Fillets, whole steaks **Shellfish** Crab meat, lobster tails, shrimp, scallops Turn food over at beep. After defrosting, let stand for 5 - 10 minutes.
BREAD (dEF4) 0.1 - 2.0 lbs	Sliced bread, buns, baguettes, etc. Separate slices and place between paper towels or on flat plate. Turn food over at beep. After defrosting, let stand for 1 - 2 minutes.

Defrosting Tips

- **When using** Auto Defrost, the weight to be entered is the net weight in pounds and tenths of pounds (the weight of the food minus the container).
- **Before starting**, remove the metal twist-ties which often come with frozen food bags, and replace them with strings or elastic bands.
- **Open containers** such as cartons before they are placed in the oven.
- **Always slit** or pierce plastic pouches or packaging.
- **If food is foil wrapped**, remove foil and place the food in a suitable container.
- **Slit** the skins, if any, of frozen food such as sausage.
- **Bend** plastic pouches of food to ensure even defrosting.
- **Always underestimate** defrosting time. If defrosted food is still icy in the center, return it to the microwave oven for more defrosting.
- **The length** of defrosting time varies according to how solidly the food is frozen.
- **The shape of the package** affects how quickly food will defrost. Shallow packages will defrost more quickly than a deep block.
- **As food begins to defrost**, separate the pieces Separated pieces defrost more easily.
- **Use small pieces of aluminum foil** to shield parts of food such as chicken wings, leg tips, fish tails, or areas that start to get warm. Make sure the foil does not touch the sides, top, or bottom of the oven. The foil can damage the oven lining.
- **For better results,** let food stand after defrosting. (For more information on standing time, see the **Microwave Cooking Tips** section.)
- **Turn over** food during defrosting or standing time Break apart and remove food as required.

Weight Conversion Table

Most food weights are given in pounds and ounces. If using pounds, food weights must be entered into Auto Defrost in pounds and tenths of pounds (decimals).
Use the following table if necessary to convert food weights to decimals.

Equivalent Weight		
OUNCES	**DECIMAL WEIGHT**	
1.6	.10	
3.2	.20	
4.8	.30	
6.4	.40	
8.0	.50	One-Half Pound
9.6	.60	
11.2	.70	
12.8	.80	
14.4	.90	
16.0	1.00	One Pound

Operating Tips

- Remove fish, shellfish, meat, and poultry from its original wrapping paper or plastic package. Otherwise, the wrap will hold steam and juice close to the foods, which can cause the outer surface of the foods to cook.
- Place foods in a shallow container or in a microwave roasting dish to catch the drippings.
- Food should still be somewhat icy in the center when removed from the oven.
- The length of defrosting time varies according to how solidly the food is frozen.
- The shape of the package affects how quickly food will defrost. Shallow packages will defrost more quickly than a deep block.
- Depending on the shape of the food, some areas may defrost more quickly than others.
- For best results, shape ground meat into the form of a doughnut before freezing. When defrosting, scrape off thawed meat when the beep sounds and continue defrosting.

SMART DIAGNOSIS™

Using the Smart Diagnosis™ Function

Should you experience any problems with the oven, it has the capability of transmitting data via your telephone to the LG Customer Information Center.

1 Call the LG Customer Information Center at 1-800-243-0000 (U.S.) or 1-888-542-2623 (Canada).

2 When instructed to do so by the call center agent, hold the mouthpiece of your phone over the Smart Diagnosis™ logo on the control panel.

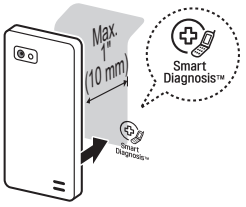

NOTE

- Do not touch any other buttons.

3 Open the oven door. Press and hold the Clear button for 8 seconds, until "5" appears in the display. Release the button and audible transmission tones start sounding.

4 Keep the phone in place until the tone transmission has finished. The display will count down the time.

5 Once the countdown is over and the tones have stopped, resume your conversation with the call center agent, who will then be able to assist you in using the information transmitted for analysis.

NOTE

- For best results, do not move the phone while the tones are being transmitted.
- If the call center agent is not able to get an accurate recording of the data, you may be asked to try again.

MAINTENANCE

Caring for the Microwave Oven

Interior

Food spatters or spilled liquids stick to oven walls and between the seal and door surfaces. Although the oven interior has an antibacterial coating, it is best to wipe up spillovers with a damp cloth right away. Crumbs and spillovers will absorb microwave energy and lengthen cooking times and may even damage the oven. Use a damp cloth to wipe out crumbs that fall between the door and the frame. It is important to keep this area clean to assure a tight seal. Remove greasy spatters with a soapy cloth then rinse and dry. Do not use harsh detergent or abrasive cleaners. Anti-bacterial claim based on internal testing with e-coli and Staphylococcus bacteria, showing coating prevents 99.99 % of bacterial growth on the surface of the cavity of NeoChef.

Exterior

Disconnect the plug from the power outlet before cleaning the oven to eliminate the possibility of electric shock. Clean the outside of your oven with soap and water then with clean water and dry with a soft cloth or paper towel. To prevent damage to the operating parts inside the oven, the water should not be allowed to seep into the ventilation openings. To clean control panel, open the door to prevent the oven from accidentally starting, and wipe with a damp cloth followed immediately by a dry cloth. Press **STOP/Clear** after cleaning.

If steam accumulates inside or around the outside of the oven door, wipe the panels with a soft cloth. Steam or condensation buildup inside the door is normal if foods are heated for a long period on higher power levels. This is not a malfunction. The condensation will eventually evaporate. Try covering the food or varying the heating levels and time to reduce any condensation forming in the door. This may also occur when the oven is operated under high humidity conditions and in no way indicates a malfunction of the unit.

The door and door seals should be kept clean. Use only warm, soapy water, rinse then dry thoroughly. DO NOT USE ABRASIVE MATERIALS, SUCH AS CLEANING POWDERS OR STEEL AND PLASTIC PADS.
Metal parts will be easier to maintain if wiped frequently with a damp cloth.

NOTE

- **Abrasive cleansers, steel wool pads, gritty wash cloths, some paper towels**, etc., can damage the control panel and the interior and exterior oven surfaces.

To clean the glass tray and rotating ring, wash in mild, sudsy water.
For heavily soiled areas use a mild cleanser and scouring sponge.
The glass tray and rotating ring are dishwasher safe.

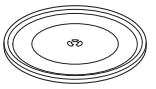

Glass Tray

Rotating Ring

TROUBLESHOOTING

Frequently Asked Questions

Operation

Why is the oven light not on during cooking?

Make sure the cooking time has been set and the **START/Enter/+30 sec.** button has been pressed.

Why does steam come out of the air exhaust vent?

Steam is normally produced during cooking. The microwave oven has been designed to vent this steam.

Will the microwave oven be damaged if it operates empty?

Yes. Never operate the oven empty or without the glass tray.

Does microwave energy pass through the viewing screen in the door?

No. The metal screen bounces the energy back to the oven cavity. The holes (or ports) allow only light to pass through. They do not let microwave energy pass through.

Why does a tone sound when a pad on the control panel is touched?

The tone tells you that the setting has been entered.

Can my microwave oven be damaged if food is cooked for too long?

Like any other cooking appliance, it is possible to overcook food to the point that the food creates smoke and even possibly fire, and damage to the inside of the oven. It is always best to be near the oven while you are cooking.

I've plugged the oven in and it does not work properly. What is wrong?

The microcomputer controlling your oven may temporarily become scrambled and fail to function as programmed when you plug the oven in for the first time or when power resumes after a power interruption. Unplug the oven from the 120 V household outlet and then plug it back in to reset the microcomputer.

Why do I see light reflection around the outer case?

This light is from the oven light which is located between the oven cavity and the outer wall of the oven.

What are the various sounds I hear when the microwave oven is operating?

The clicking sound is caused by a mechanical switch turning the microwave oven's magnetron ON and OFF.
The heavy hum and clunk is from the change in power the magnetron draws as it is turned ON and OFF by a mechanical switch. The change in blower speed is from the change in line voltage caused by the magnetron being turned ON and OFF.

Food

Is it possible to pop popcorn in a microwave oven?

Yes, if using one of the two methods described below:

(1) microwave-popping devices designed specifically for microwave cooking

(2) prepackaged commercial microwave popcorn that specifies the cook time and power output needed.

Follow exact directions given by each manufacturer for its popcorn popping product and do not leave the oven unattended while the corn is being popped. If corn fails to pop after the suggested time, discontinue cooking. Overcooking could result in an oven fire.

CAUTION

Never use a brown paper bag for popping corn or attempt to pop leftover kernels.

Why is a standing time recommended after microwave cooking time is over?

Standing time allows foods to continue cooking evenly for a few minutes after the actual microwave oven cooking cycle. The amount of standing time depends upon the density of the foods.

Why is additional time required for cooking food stored in the refrigerator?

As in conventional cooking, the initial temperature of food affects total cooking time. You need more time to cook food taken out of a refrigerator than for food at room temperature.

Before Calling for Service

You can often correct operating problems yourself. If your microwave oven fails to work properly, locate the operating problem in the list below and try the solutions listed for each problem.
If the microwave oven still does not work properly, contact the nearest LG Authorized Service Center. LG Authorized Service Centers are fully equipped to handle your service requirements.

Symptoms	Possible Causes / Solutions
Oven does not start	• Plug in power cord. • Close oven door. • Set cooking time.
Arcing or Sparking	• Cookware is not microwave safe. When in doubt, test cookware before use. • Do not operate oven while empty.
Incorrect time of day	• Possible power interruption. See Clock section to reset time of day.
Unevenly Cooked Foods	• Test cookware to make sure it is microwave safe. • Do not cook without the glass tray. • Turn or stir food while cooking. • Defrost food completely before cooking. • Use correct cook time and power level.
Overcooked Foods	• Change cook time or power level.
Undercooked Foods	• Test that cookware is microwave safe. • Defrost food completely before cooking. • Change cook time or power level. • Make sure ventilation ports are not blocked.
Improper Defrosting	• Test that cookware is microwave safe. • Change defrost time or weight. • Turn or stir food during defrost cycle.

WARRANTY (USA)

WARRANTY: Should your LG Microwave fail due to a defect in materials or workmanship under normal home use, during the warranty period set forth below, LG will at its option repair or replace the product. This limited warranty is valid only to the original retail purchaser of the product and applies only when purchased and used within the United States including U.S. Territories. Proof of original retail purchase is required to obtain warranty service under this limited warranty.

Warranty Period	HOW SERVICE IS HANDLED
LABOR: One Year from the Date of Purchase*. **PARTS** (except as listed below): One Year from the Date of Purchase*. **MAGNETRON:** Ten Years from the Date of Purchase*. Replacement Units and Repair Parts are warranted for the remaining portion of the original unit's warranty period. * Retain your sales receipt to prove the date of purchase. A copy of your sales receipt must be submitted at the time warranty service is provided.	**Please call 1-800-243-0000 and choose the appropriate option.** (Phones are answered 24 hours a day, 365 days per year.) Please have the product type (Microwave) and your ZIP code ready. Or visit our website at: www.lg.com

THIS WARRANTY IS IN LIEU OF ANY OTHER WARRANTY, EXPRESS OR IMPLIED, INCLUDING WITHOUT LIMITATION, ANY WARRANTY OF MERCHANTABILITY OR FITNESS FOR A PARTICULAR PURPOSE. TO THE EXTENT ANY IMPLIED WARRANTY IS REQUIRED BY LAW, IT IS LIMITED IN DURATION TO THE EXPRESS WARRANTY PERIOD ABOVE. SIGNATURE KITCHEN SUITE WILL NOT BE LIABLE FOR ANY INCIDENTAL, CONSEQUENTIAL, INDIRECT, SPECIAL, OR PUNITIVE DAMAGES OF ANY NATURE, INCLUDING WITHOUT LIMITATION, LOST REVENUES OR PROFITS, OR ANY OTHER DAMAGE WHETHER BASED IN CONTRACT, TORT, OR OTHERWISE.

Some states do not allow the exclusion or limitation of incidental or consequential damages or limitations on how long an implied warranty lasts, so the above exclusion or limitation may not apply to you. This warranty gives you specific legal rights and you may also have other rights that vary from state to state.

THIS LIMITED WARRANTY DOES NOT APPLY TO:

- Service trips to deliver, pick up, or install or repair the product; instruction to the customer on operation of Service trips to your home to deliver, pick up, and/or install the product, instruct, or replace house fuses or correct wiring, or correction of unauthorized repairs.
- Damages or operating problems that result from misuse, abuse, operation outside environmental specifications or contrary to the requirements of precautions in the Operating Guide, accident, vermin, fire, flood, improper installation, acts of God, unauthorized modification or alteration, incorrect electrical current or voltage, or commercial use, or use for other than intended purpose.

The cost of repair or replacement under these excluded circumstances shall be borne by the consumer.

For complete warranty details and customer assistance, please call or visit our website:

Call 1-800-243-0000 (24 hours a day, 365 days a year) and select the appropriate option from the menu, or visit our website at http://www.lg.com

Write your warranty information below

Product Registration Information: _____

Model: _____

Serial Number: _____

Date of Purchase: _____

WARRANTY (CANADA)

WARRANTY: Should your LG Microwave (“Product”) fail due to a defect in material or workmanship under normal home use during the warranty period set forth below, LG Canada will at its option repair or replace the Product upon receipt of proof of original retail purchase. This warranty is valid only to the original retail purchaser of the product and applies only to a product distributed in Canada by LG Canada or an authorized Canadian distributor thereof. The warranty only applies to products located and used within Canada. In home warranty repair will be provided within 150 km of an authorized service center (ASC). Repairs outside the 150 km radius will need to be delivered to the ASC at the customer's expense.

WARRANTY PERIOD: (Note: If the original date of purchase cannot be verified, the warranty will begin sixty (60) days from the date of manufacture).

Over-the-Range / All Convection / Microwaves in Built-in application / All other Microwave Oven	Extended Component Warranty (Parts Only)	
One (1) year from the date of original retail purchase	Five (5) years from the date of original retail purchase	Ten (10) years from the date of original retail purchase
Parts and Labor (In-Home ; OTR & Convection) (internal/functional parts only)	Magnetron Only	Inverter Magnetron Only

- Replacement products and parts are warranted for the remaining portion of the original warranty period or ninety (90) days, whichever is greater.
- Replacement products and parts may be new or remanufactured.
- LG Authorized Service Center warranties their repair work for thirty (30) days.

LG CANADA’S SOLE LIABILITY IS LIMITED TO THE WARRANTY SET OUT ABOVE. EXCEPT AS EXPRESSLY PROVIDED ABOVE, LG CANADA MAKES NO AND HEREBY DISCLAIMS ALL OTHER WARRANTIES AND CONDITIONS RESPECTING THE PRODUCT, WHETHER EXPRESS OR IMPLIED, INCLUDING, BUT NOT LIMITED TO, ANY IMPLIED WARRANTY OR CONDITION OF MERCHANTABILITY OR FITNESS FOR A PARTICULAR PURPOSE, AND NO REPRESENTATIONS SHALL BE BINDING ON LG CANADA. LG CANADA DOES NOT AUTHORIZE ANY PERSON TO CREATE OR ASSUME FOR IT ANY OTHER WARRANTY OBLIGATION OR LIABILITY IN CONNECTION WITH THE PRODUCT. TO THE EXTENT THAT ANY WARRANTY OR CONDITION IS IMPLIED BY LAW, IT IS LIMITED TO THE EXPRESS WARRANTY PERIOD ABOVE. LG CANADA, THE MANUFACTURER OR DISTRIBUTOR SHALL NOT BE LIABLE FOR ANY INCIDENTAL, CONSEQUENTIAL, SPECIAL, DIRECT OR INDIRECT DAMAGES, LOSS OF GOODWILL, LOST PROFITS, PUNITIVE OR EXEMPLARY DAMAGES OR ANY OTHER DAMAGE, WHETHER ARISING DIRECTLY OR INDIRECTLY FROM ANY CONTRACTUAL BREACH, FUNDAMENTAL OR OTHERWISE, OR FROM ANY ACTS OR OMISSIONS, TORT, OR OTHERWISE.

This warranty gives you specific legal rights. You may have other rights which may vary from province to province depending on applicable provincial laws. Any term of this warranty that negates or varies any implied condition or warranty under provincial law is severable where it conflicts with provincial law without affecting the remainder of this warranty’s terms.

THIS LIMITED WARRANTY DOES NOT COVER:

- Service trips to deliver, pick up, or install the product; instructing a customer on operation of the product; repair or replacement of fuses or correction of wiring , or correction of unauthorized repairs/installation.
- Failure of the product to perform during power failures and interruptions or inadequate electrical service.
- Damage caused by leaky or broken water pipes, frozen water pipes, restricted drain lines, inadequate or interrupted water supply or inadequate supply of air.
- Damage resulting from operating the product in a corrosive atmosphere or contrary to the instructions outlined in the product owner’s manual.
- Damage to the product caused by accidents, pests and vermin, lightning, wind, fire, floods, or acts of God.
- Damage resulting from the misuse, abuse, improper installation, repair, or maintenance of the product. Improper repair includes use of parts not approved or specified by LG Canada.

- Damage or product failure caused by unauthorized modification or alteration, or use for other than its intended purpose, or resulting from any water leakage due to improper installation.
- Damage or product failure caused by incorrect electrical current, voltage, commercial or industrial use, or use of accessories, components, or cleaning products that are not approved by LG Canada.
- Damage caused by transportation and handling, including scratches, dents, chips, and/or other damage to the finish of your product, unless such damage results from defects in materials or workmanship and is reported within one (1) week of delivery.
- Damage or missing items to any display, open box, discounted, or refurbished product.
- Products with original serial numbers that have been removed, altered, or cannot be readily determined. Model and Serial numbers, along with original retail sales receipt, are required for warranty validation.
- Increases in utility costs and additional utility expenses.
- Replacement of light bulbs, filters, or any consumable parts.
- Repairs when your product is used in other than normal and usual household use (including, without limitation, commercial use, in offices or recreational facilities)or contrary to the instructions outlined in the product owner's manual.
- Costs associated with removal of the product from your home for repairs.
- The removal and reinstallation of the product if it is installed in an inaccessible location or is not installed in accordance with published installation instructions, including the product owner's and installation manuals.
- Accessories to the product such as door bins, drawers, handles, shelves, etc. Also excluded are parts besides those that were originally included with the product.

All costs associated with the above excluded circumstances shall be borne by the consumer.

For complete warranty details and customer assistance, please call or visit our website:

Call 1-888-542-2623 (24 hours a day, 365 days a year) and select the appropriate option from the menu, or visit our website at http://www.lg.ca

Write your warranty information below

Product Registration Information: _____

Model: _____

Serial Number: _____

Date of Purchase: _____

LG
Life's Good

LG Customer Information Center	
1-800-243-0000	USA
1-888-542-2623	CANADA
Register your product Online!	
www.lg.com	

Printed in China