Use & Care Guide

For best results, a low-sudsing, HE High Efficiency Detergent made for high efficiency washers must be used.

SMART CONTROL

Model: 796.3143*

Kenmore Elite®
Top-Loading
Automatic Washer

* = color number

MFL68267037

Sears Brands Management Corporation
Hoffman Estates, IL 60179 U.S.A.

www.kenmore.com

TABLE OF CONTENTS

IMPORTANT SAFETY INSTRUCTIONS 3-5
GROUNDING REQUIREMENTS 5
FEATURES AND BENEFITS
Key Parts and Components 6
Optional Accessories 6
Included Accessories 6
INSTALLATION REQUIREMENTS
Key Dimensions and Specifications 7
Choose the Proper Location 7
Flooring 7
Clearances 7
INSTALLATION INSTRUCTIONS
Unpacking and Removing Shipping Material 8
Connecting the Water Lines 9
Connecting the Drain Hose 10
Connect to the Power Supply 10
Leveling the Washer 11
HOW TO USE
Control Panel Features 12
Operating the Washer 13
Cycle Guide 14-15
Sorting Wash Loads 16-17
About the Dispensers 18
Detergent and Dispenser Use 19
Time and Status Display 20
Cycle Modifier Buttons 21
Option Buttons 22-24
Accela Wash 22
Stain Boost 22
Extra Rinse 22
Deep Fill 22
Add a Garment 22
Chime 22
Fabric Softener 23
Soak 23
Delay Wash 23
Rinse & Spin 23
Control Lock 23
Special Drain Feature 23
Smart Features 23-26
FCC Notice 27
Open Source Software Notice 27
CARE AND CLEANING
Regular Cleaning 28
Maintenance 29
Cleaning the Washer 30
DIAGNOSTICS 31
Using Diagnostics 31
TROUBLESHOOTING GUIDE
Normal Sounds You May Hear 32
Before Calling for Service 33-37
Error Codes 36-37
WARRANTY 38
SERVICE ..... Back Cover

PRODUCT RECORD

In the space below, record the date of purchase, model, and serial number of your product. You will find the model and serial number printed on an identification plate located inside the washer lid. Have these items of information available whenever you contact Sears concerning your product.

Model No. _____

Date of Purchase _____

Serial No. _____

Save these instructions and your sales receipt for future reference.

SAFETY MESSAGES

There are many important safety messages in this manual and on your appliance. Always read and obey all safety messages.

This is the safety alert symbol. This symbol alerts you to potential hazards that can result in property damage and/or serious bodily harm or death.

All safety messages will follow the safety alert symbol and either the word DANGER, WARNING or CAUTION. These words mean:

⚠ DANGER Indicates a hazardous situation which, if not avoided, will result in death or serious injury.

⚠ WARNING Indicates a hazardous situation which, if not avoided, could result in death or serious injury.

⚠ CAUTION Indicates a hazardous situation which, if not avoided, could result in minor or moderate injury.

All safety messages will tell you what the potential hazard is, tell you how to reduce the chance of injury, and tell you what can happen if the instructions are not followed.

IMPORTANT SAFETY INSTRUCTIONS

⚠ WARNING

To reduce the risk of fire, electric shock, or injury to persons when using this appliance, follow basic precautions, including the following.

- Use this appliance only for its intended purpose as described in this Use & Care Guide.
- Before use, the washer must be properly installed as described in this manual.
- Do not wash articles that have been previously cleaned in, washed in, soaked in, or spotted with gasoline, dry cleaning solvents, or other flammable or explosive substances, as they give off vapors that could ignite or explode.
- Do not add gasoline, dry cleaning solvents, or other flammable or explosive substances to the wash water. These substances give off vapors that could ignite or explode.
- Under certain conditions, hydrogen gas may be produced in a hot water system that has not been used for two weeks or more. HYDROGEN GAS IS EXPLOSIVE. If the hot water system has not been used for such a period, before using the washer, turn ON all hot water faucets and let the water flow from each for several minutes. This will release any accumulated hydrogen gas. As the gas is flammable, do not smoke or use an open flame during this time.
- Do not allow children to play on or in the washer. Close supervision of children is necessary when the washer is used near children.
- Before your washer is removed from service or discarded, remove the lid to the washing compartment to avoid the danger of children or small animals getting trapped inside. Failure to do so can result in serious personal injury or death.
- Do not install or store the washer where it will be exposed to the weather or freezing temperatures.
- Do not tamper with controls.
- Keep the area underneath and around your appliance free of combustible materials (lint, paper, rags, etc.), gasoline, chemicals and other flammable vapors and liquids.
- Do not repair or replace any part of the washer or attempt any servicing other than as described in this manual. We strongly recommend that any service be performed by a qualified technician.
- See Installation Instructions for grounding requirements.
- ALWAYS follow the fabric care instructions supplied by the garment manufacturer.
- Do not place items exposed to cooking oil in your washer. Items contaminated with cooking oils may contribute to a chemical reaction that could cause a load to catch fire.
- Use fabric softeners or products to eliminate static only as recommended by the manufacturer.
- This washer is not designed for maritime use or for mobile installations such as in RVs, aircraft, etc.
- Turn OFF the water faucets and unplug the washer if the machine is to be left for an extended period of time, such as during vacations.
- Packaging material can be dangerous for children. **There is a risk of suffocation.** Keep all packaging from children.
- Always check the inside of the washer for foreign objects before loading laundry. Keep the lid closed when not in use.

⚠ WARNING

To reduce the risk of fire, electric shock, or injury to persons when using this appliance, follow basic precautions, including the following.

- **Unplug the washer before cleaning** to avoid the risk of electric shock.
- **Never use harsh chemicals, abrasive cleaners, or solvents to clean the washer.** They will damage the finish.
- **Do not put oily or greasy rags or clothing on top of the washer.** These substances give off vapors that could ignite the materials.
- **Do not wash items that are soiled with vegetable or cooking oil.** These items may contain some oil after laundering and may catch fire.
- **Disconnect this appliance from the power supply before attempting any user maintenance. Turning the controls to the OFF position does not disconnect this appliance from the power supply.** Failure to follow this warning can cause serious injury, fire, electric shock, or death.
- **Do not combine detergents, fabric softeners, and/or other laundry products from different manufacturers for use in a load, unless specified on the label.**
- **Do not mix chlorine bleach with ammonia or acids such as vinegar. Follow package directions when using laundry products.** Incorrect usage can produce poisonous gas, resulting in serious injury or death.
- **Do not reach into the washer while parts are moving. Before loading, unloading, or adding items, push in the cycle selector knob and allow the tub to coast to a complete stop before reaching inside.** Failure to follow this warning can cause serious injury, fire, electric shock or death.
- **Refer to INSTALLATION INSTRUCTIONS for detailed grounding procedures.** Installation instructions are packed in the washer for the installer's reference. If the washer is moved to a new location, have it checked and reinstalled by a qualified service technician. Failure to follow this warning can cause serious injury, fire, electric shock, or death.
- **Do not, under any circumstances, cut or remove the third (ground) prong from the power cord.** Failure to follow this warning can cause serious injury, fire, electric shock, or death.
- **For personal safety, this appliance must be properly grounded.** Failure to follow this warning can cause serious injury, fire, electric shock, or death.
- **The power cord of this appliance is equipped with a 3-prong (grounding) plug which mates with a standard 3-prong (grounding) wall outlet** to minimize the possibility of electric shock hazard from this appliance.
- **This washer must be plugged into a 120VAC, 60Hz grounded outlet.** Failure to follow this warning can cause serious injury, fire, electric shock, or death.
- **Have the wall outlet and circuit checked by a qualified electrician to make sure the outlet is properly grounded.** Failure to follow this warning can cause serious injury, fire, electric shock, or death.
- **Where a standard 2-prong wall outlet is encountered, it is your personal responsibility and obligation to have it replaced with a properly grounded 3-prong wall outlet.** Failure to follow this warning can cause serious injury, fire, electric shock, or death.
- **Do not install on carpet. Install the washer on a solid floor.** Failure to follow this warning can cause serious leak damage.
- **Do not remove grounding prong. Do not use an adapter or extension cord. Plug into a grounded 3-prong outlet.** Failure to follow these warnings can cause serious injury, fire, electric shock, or death.
- **Do not, under any circumstances, cut or remove the third (ground) prong from the power cord.** Failure to follow this warning can cause serious injury, fire, electric shock, or death.
- **The washer should always be plugged into its own individual electrical outlet which has a voltage rating that matches the rating plate. This provides the best performance and also prevents overloading house wiring circuits which could cause a fire hazard from overheated wires.**
- **Never unplug your washer by pulling on the power cord. Always grip plug firmly and pull straight out from the outlet. Failure to follow this warning can cause serious injury, fire, electric shock, or death.**
- **Immediately repair or replace all power cords that have become frayed or otherwise damaged. Do not use a cord that shows cracks or abrasion damage along its length or at either end. Consult with a qualified service technician. Failure to follow this warning can cause serious injury, fire, electric shock, or death.**
- **When installing or moving the washer, be careful not to pinch, crush, or damage the power cord. Failure to follow this warning can cause serious injury, fire, electric shock, or death.**
- **The washer must be installed and electrically grounded by a qualified service technician in accordance with local codes to prevent shock hazard and assure stability during operation.**
- **The washer is heavy. Two or more people will be needed to install and move the appliance. Failure to do so can result in damage to property or serious bodily injury.**
- **Store and install the washer where it will not be exposed to temperatures below freezing or exposed to outdoor weather conditions. Failure to follow this warning can cause serious leak damage.**
- **To reduce the risk of electric shock, do not install the washer in humid spaces. Failure to follow this warning can cause serious injury, fire, electric shock, or death.**
- **To reduce the risk of personal injury, adhere to all industry recommended safety procedures including the use of long sleeved gloves and safety glasses. Failure to follow all of the safety warnings in this manual could result in property damage, personal injury or death.**
- **Never attempt to operate this appliance if it is damaged, malfunctioning, partially disassembled or has missing or broken parts, including a damaged cord or plug.**
- **To minimize the possibility of electric shock, unplug this appliance from the power supply or disconnect the washer at the household distribution panel by removing the fuse or switching off the circuit breaker before attempting any maintenance or cleaning.**
- **To reduce the risk of electric shock, do not touch the power plug with wet hands.**

⚠ WARNING: RISK TO CHILDREN

- Do not allow children to play on or in the washer. Close supervision of children is necessary when the washer is used near children. As children grow, teach them the proper, safe use of all appliances. Failure to comply with these warnings could result in serious personal injury.
- Destroy the carton, plastic bag, and other packing materials after the washer is unpacked. Children might use them for play. Cartons covered with rugs, bedspreads, or plastic sheets can become airtight chambers. Failure to comply with these warnings could result in serious personal injury.
- Keep laundry products out of children's reach. To prevent personal injury, observe all warnings on product labels. Failure to comply with these warnings could result in serious personal injury.
- Before your washer is removed from service or discarded, remove the lid to the washing compartment to avoid the danger of children or small animals getting trapped inside. Failure to do so can result in serious personal injury or death.

GROUNDING REQUIREMENTS

IMPORTANT: Please read carefully. TO CONNECT ELECTRICITY

⚠ WARNING

Improper connection of the equipment-grounding conductor can result in risk of electric shock. Check with a qualified electrician or service technician if you are in doubt as to whether the appliance is properly grounded. Do not modify the plug provided with the appliance. If it does not fit the outlet, have a proper outlet installed by a qualified electrician. Failure to follow these warnings can cause serious injury, fire, electric shock, or death.

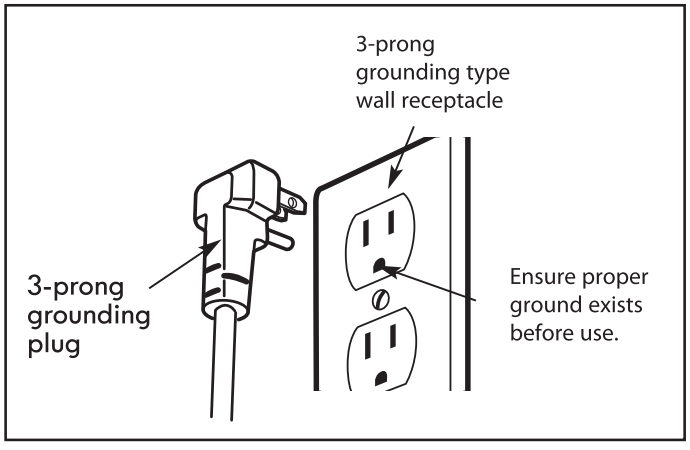

GROUNDING INSTRUCTIONS

This appliance must be grounded. In the event of malfunction or breakdown, grounding will reduce the risk of electric shock by providing a path of least resistance for electric current. This appliance is equipped with a cord having an equipment-grounding conductor and grounding plug. The plug must be plugged into an appropriate outlet that is properly installed and grounded in accordance with all local codes and ordinances.

WARNING

Certain internal parts are intentionally not grounded and may present a risk of electric shock only during servicing. Service personnel-do not contact the following parts while the appliance is energized : pump, motor, noise filter cover, and heater (on applicable models).

KEY PARTS AND COMPONENTS

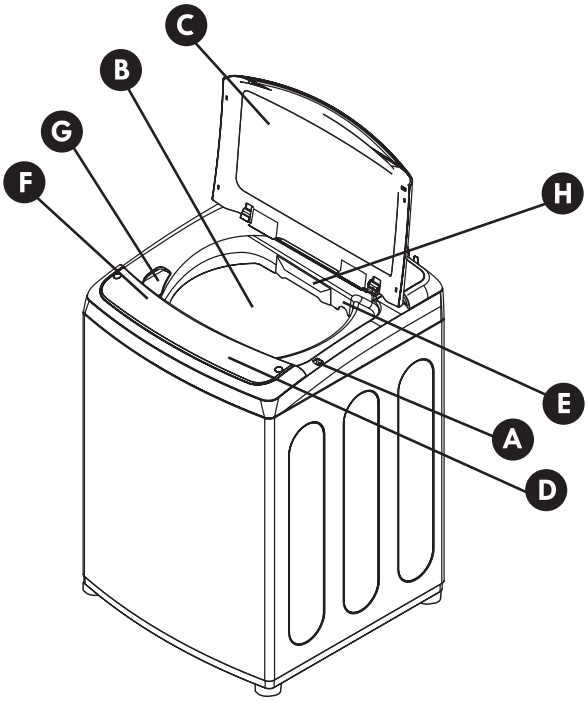

A LID LOCK
The washer lid is locked during operation. The lid can be unlocked by pressing the START/ PAUSE button to stop the washer.

B ULTRA-CAPACITY STAINLESS STEEL TUB
The ultra-large stainless steel tub offers extreme durability.

C SOFT CLOSE, TEMPERED GLASS LID
The soft close hinges allow the lid to close gently and quietly. The tempered glass is durable and makes it easy to observe the washer.

D FRONT TOUCH PANEL
The front touch panel is specially designed to be water resistant and provides easy access to controls, eliminating the need to reach for rear controls. The soft-surface touch buttons add a premium touch.

E SMARTRINSE
This washer is designed to save rinse water by using a jet spray rinse system in NORMAL and HEAVY DUTY cycles.

F KENMORE CONNECT™
Should you experience any problems with your washing machine, it has the capability of transmitting data via your telephone to the Kenmore Connect Team. This gives you the capability of speaking directly to our specially trained technicians. The technician records the data transmitted from your machine and uses it to analyze the issue, providing a fast and effective diagnosis.

G BLEACH DISPENSER
The Bleach Dispenser compartment holds liquid bleach, that is dispensed automatically at the proper time during the wash cycle.

H DISPENSER DRAWER
Add detergent or softener to the main wash compartment of the dispenser drawer. Cleaning products are dispensed automatically at the proper time during the wash cycle.

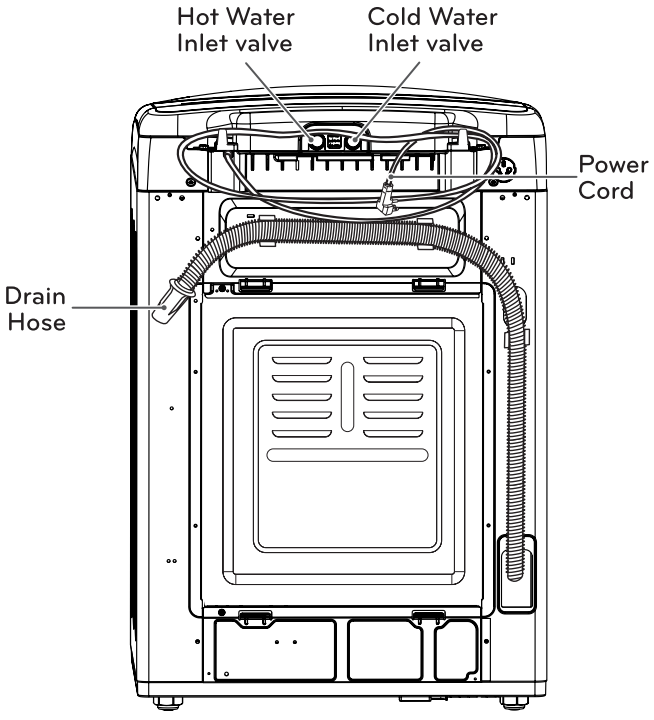

Required Accessory (sold separately)
Hot and cold water hoses*
(with 2 seals per hose, 1 at each end)
Part No. 26-59025

Included Accessory
Cable tie (for securing drain hose)

* **at Sears.com**

KEY DIMENSIONS AND SPECIFICATIONS

Description	Top-Loading Washer
Rated Voltage/Frequency	120VAC, 60Hz
Dimensions	27"(W) X 28 3/8"(D) X 41 3/10"(H), 55 3/8"(H with lid open) 68.6 cm (W) X 72.1 cm (D) X 105.0 cm (H), 140.6 cm (H with lid open)
Net Weight	137.8 lbs. (62.5kg)

CHOOSE THE PROPER LOCATION

⚠ WARNING

- **Washer is heavy. Two or more people are required when moving and unpacking the washer.** Failure to do so may result in damage to property or serious bodily harm.
- **Store and install the washer where it will not be exposed to temperatures below freezing or exposed to outdoor weather conditions.** Failure to follow this warning can cause serious injury, fire, electric shock, or death.
- **Properly ground washer to conform with all electric governing codes and ordinances.** Failure to follow this warning can cause serious injury, fire, electric shock, or death.
- **To reduce the risk of electric shock, do not install the washer in humid spaces.** Failure to follow this warning can cause serious injury, fire, electric shock, or death.
- **To ensure proper air flow, do not block the large opening on the bottom of the washer with carpeting or other materials.**
- **Do not remove ground prong. Do not use an adapter or extension cord. Plug into a grounded 3-prong outlet.** Failure to follow this warning can cause serious injury, fire, electric shock, or death.

NOTE: Installing the washer in a humid space, or installing or storing the washer where it will be exposed to the weather or freezing temperatures, may result in rust or other damage that is not covered by the product warranty.

Power Outlet

- The power outlet must be within 60 in. (1.5 m) of either side of the washer.
- The appliance and outlet must be positioned so that the plug is easily accessible.
- Do not overload the outlet with more than one appliance.
- The outlet must be grounded in accordance with current wiring electric codes and regulations.
- Time-delay fuse or circuit breaker is recommended.

NOTE: It is the personal responsibility and obligation of the product owner to have a proper outlet installed by a qualified service technician.

FLOORING

- To minimize noise and vibration, the washer MUST be installed on a solidly constructed floor. See the NOTE to your right.
- Allowable slope under the entire washer is a maximum 1 in. difference from side to side or from front to back.
- Installing on carpeting and soft tile surfaces is not recommended.
- Never install the washer on a platform or weakly supported structure.

CLEARANCES

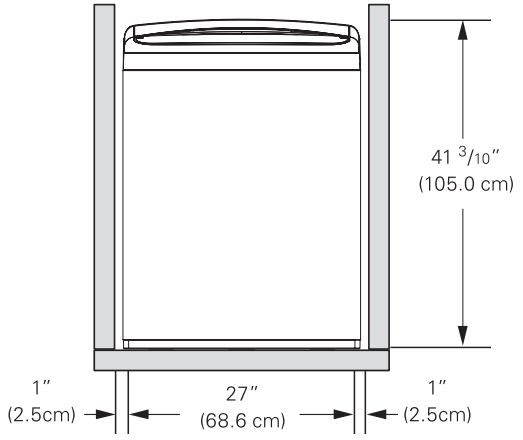

To ensure sufficient clearance for water lines and airflow, allow minimum clearances of at least 1 in. (2.5 cm) at the sides and 4 in. (10 cm) behind the unit. Be sure to allow for wall, door, or floor moldings that may increase the required clearances.

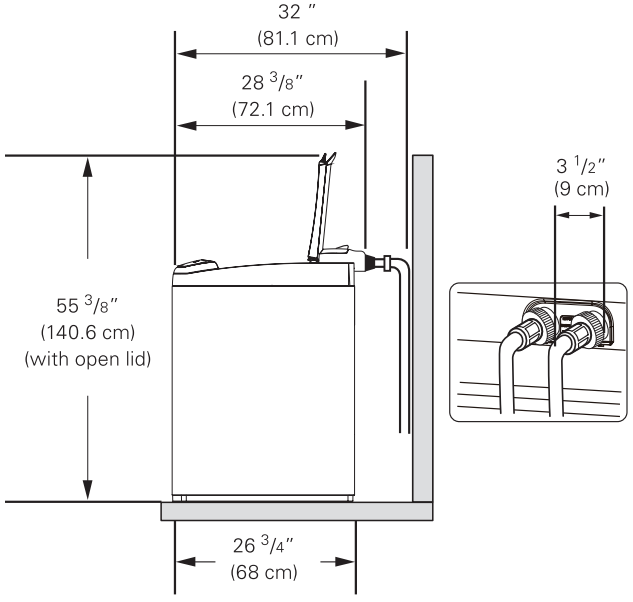

Minimum vertical space from floor to overhead shelves, cabinets, ceilings, etc., is 56 in.

NOTE: The washer must be installed on firm flooring to minimize vibration during the spin cycle. Concrete flooring is best, but a wood floor is sufficient, provided it is built to FHA standards. The washer should not be installed on rugs or exposed to weather.

UNPACKING AND REMOVING SHIPPING MATERIAL

When removing the washer from the carton base, be sure the plastic tub support comes off with the base.

If you must lay the washer down to remove the base packaging materials, always protect the side of the washer and lay it carefully on its side. **DO NOT** lay the washer on its front or back.

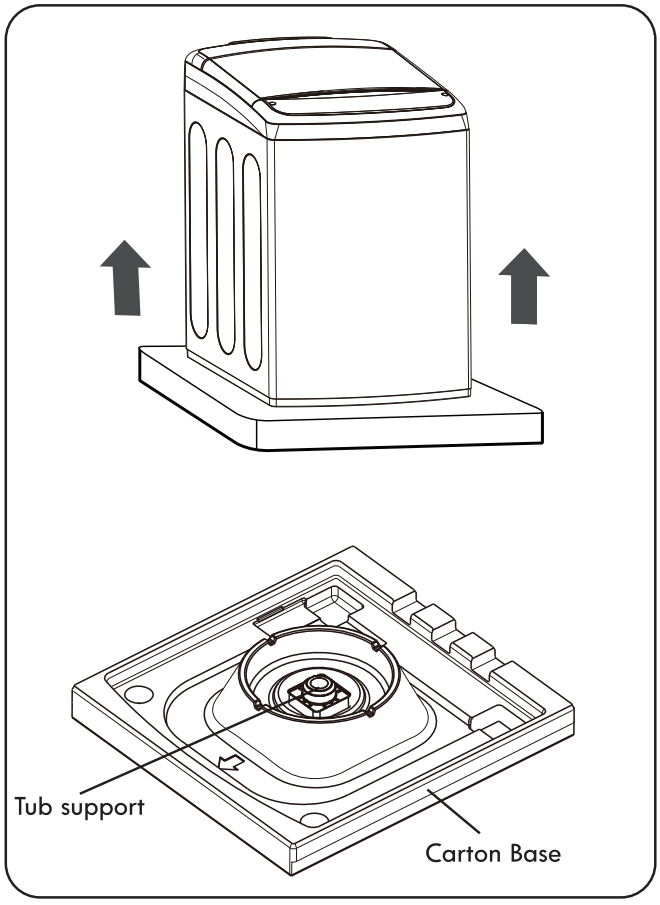

1. After removing the carton and shipping material, lift the washer off the foam base. Make sure the plastic tub support comes off with the base and is not stuck to the bottom of the washer.

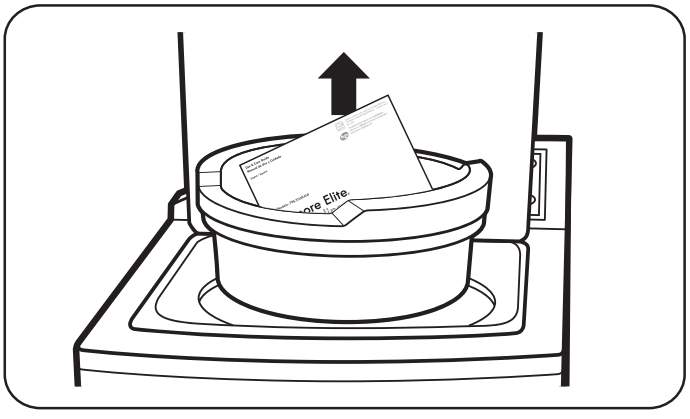

2. Save the foam block for future use. If the washer must be moved in the future, this will help prevent damage to the washer during transportation.

NOTE: To prevent damage, do not remove the foam block until the washer is at the final location.

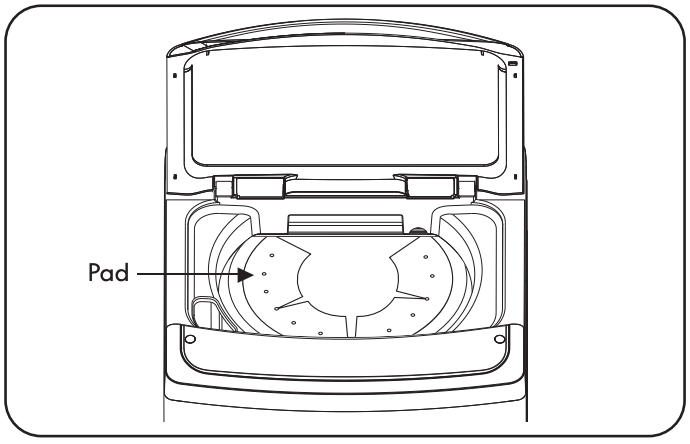

3. Carefully remove the two foam pads which cover the top sides of the tub guide, making sure not to leave behind any pieces of the foam.

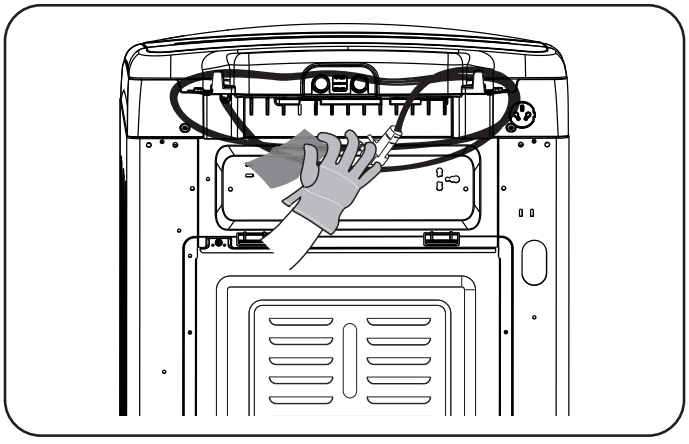

4. Unfasten the power cord from the back of the washer.

TOOLS YOU WILL NEED

- Adjustable Pliers

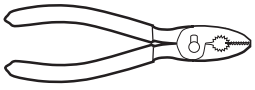

- Carpenter's Level

CONNECTING THE WATER LINES

- **IMPORTANT:** Use new hoses when installing the washer. Do NOT reuse old hoses.
- **IMPORTANT:** Use ONLY the inlet hoses provided by Kenmore. Aftermarket hoses are not guaranteed to fit or function correctly. Other hoses may not tighten correctly and could cause leaks. Subsequent damage to product or property will not be covered under the terms of the product warranty.
- Water supply pressure must be between 14.5 psi and 116 psi (100~800 kPa). If the water supply pressure is more than 116 psi, a pressure reducing valve must be installed.
- Periodically check the hose for cracks, leaks, and wear, and replace the hose if necessary.
- Make sure that the water lines are not stretched, pinched, crushed, or kinked.
- The washer should never be installed or stored in a location subject to freezing temperatures. Damage to the water lines and internal mechanisms of the washer can result. If the washer was exposed to freezing temperatures prior to installation, allow it to stand at room temperature for several hours before use and check for leaks prior to operation.

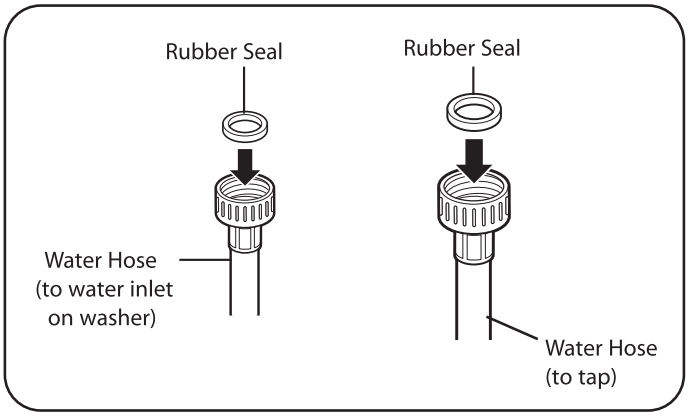

1. Inspect the threaded fitting on each hose and make sure there is a rubber seal in place in both ends.

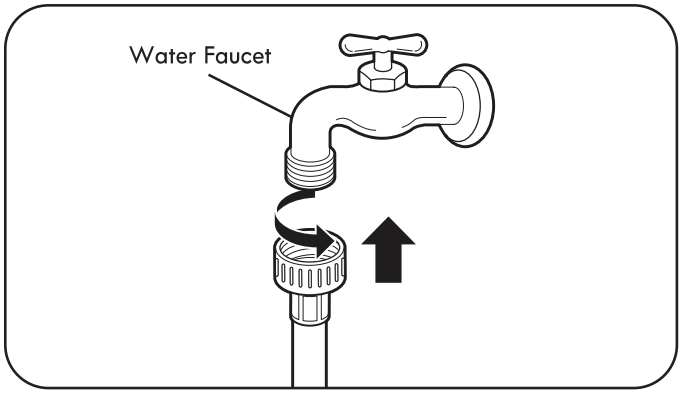

2. Connect the water supply hoses to the HOT and COLD water faucets tightly by hand and then tighten another ⅔ turn with pliers.

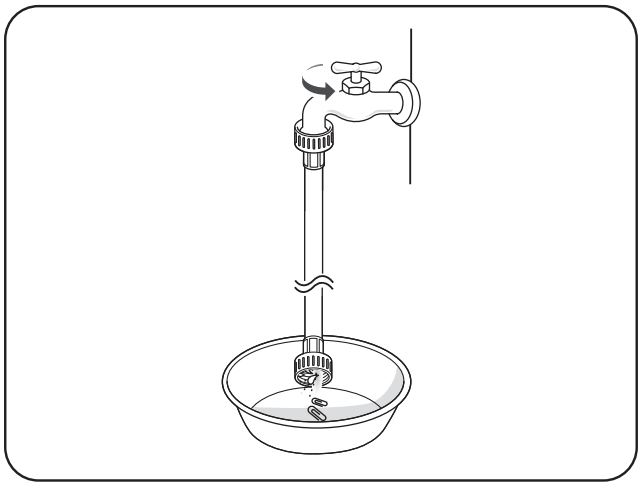

3. Always run a gallon or two of water through each inlet hose to flush dirt, scale and other debris out of the water lines. Doing so will help prevent future problems with clogged filter screens, and will also allow you to verify which hose is hot and which is cold.

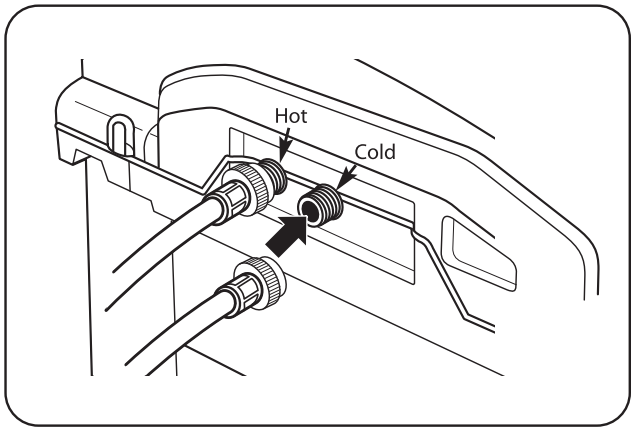

4. Attach the (red) hot water line to the hot water inlet on the back of the washer. Attach the (blue) cold water line to the cold water inlet on the back of the washer. Tighten the fittings securely. Turn ON both faucets all the way and check for leaks at both ends of the hoses.

   NOTE: Be careful not to cross-thread the hose fittings. This will damage the valve and could result in property damage from leaks.

CONNECTING THE DRAIN HOSE

- The drain hose should always be properly secured. Failure to properly secure the drain hose can result in flooding and property damage.
- The drain must be installed in accordance with any applicable local codes and regulations.
- Make sure that the drain hose is not stretched, pinched, crushed, or kinked.

Option 1: Standpipe

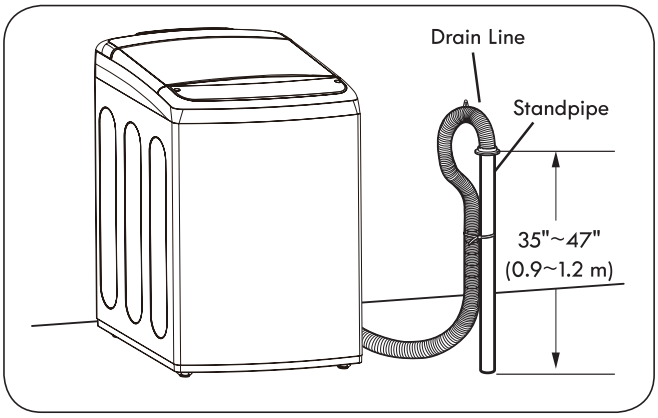

Bend the outlet end of the drain hose to form a U shape. Insert the end of the drain hose into the drain. If the drain is large enough for the flange on the hose to fit inside, then do not insert the flange more than 1-2 inches into the drain. Use the tie strap included with the installation materials in the foam block in the tub to secure the drain hose to the drain.

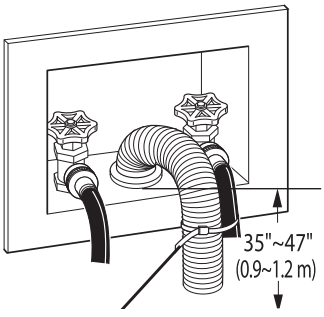

If the water valves and drain are built into the wall, fasten the drain hose to one of the water hoses with the cable tie (ribbed side on inside).

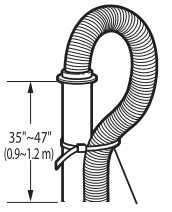

If your drain is a standpipe, fasten the drain hose to the standpipe with the cable tie provided.

NOTE:

- Normal height of the end of the hose should be approximately 35”~47” (0.9~1.2 m) from the floor.
- Do not install the end of the drain hose lower than 29 in. (0.7 m) or higher than 96 in. (243.8 cm) above the bottom of the washer or more than 60 in. (152.4 cm) away from the washer.
- Never seal the drain hose to the drain. If no air gap is present, water can be siphoned out of the tub resulting in poor wash/rinse performance or clothing damage.

Option 2: Laundry Tub

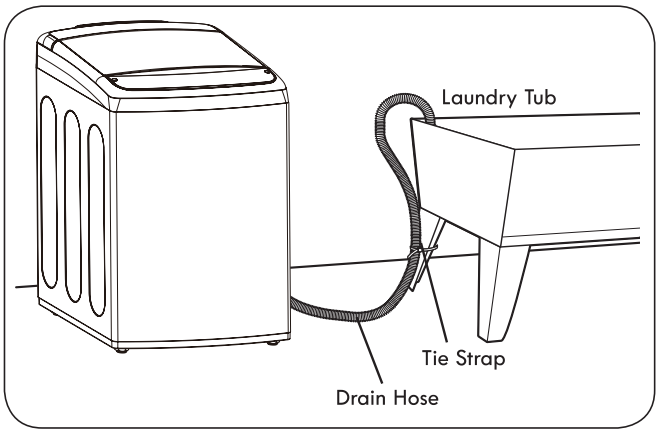

Bend the end of the drain hose to the desired shape and support it on the edge of the laundry tub. Use a tie strap to secure the drain hose in place.

CONNECT TO THE POWER SUPPLY

Washer should be plugged into a 120-VAC, 60-Hz grounded 3-prong outlet. Plug in the washer.

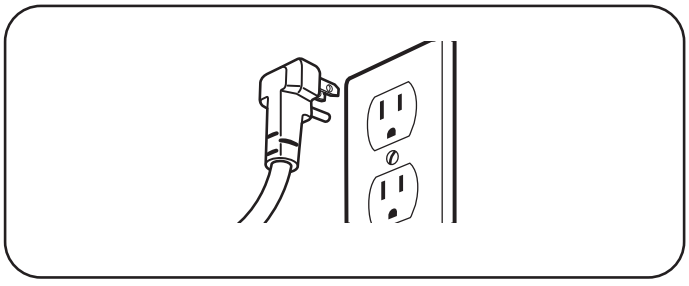

⚠ WARNING

Improper connection of the equipment-grounding conductor can result in risk of electric shock. Check with a qualified electrician or service technician if you are in doubt as to whether the appliance is properly grounded. Do not modify the plug provided with the appliance. If it does not fit the outlet, have a proper outlet installed by a qualified electrician. Failure to follow these warnings can cause serious injury, fire, electrical shock, or death.

LEVELING THE WASHER

The tub of your new washer spins at very high speeds. To minimize vibration, noise, and unwanted movement, the floor must be a level, solid surface.

NOTE: Adjust the leveling feet only as far as necessary to level the washer. Extending the leveling feet more than necessary can cause the washer to vibrate.

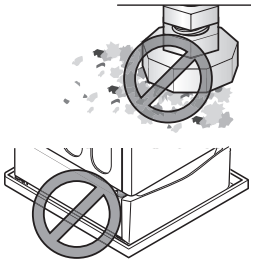

NOTE: Before installing the washer, make sure that the floor is clean, dry and free of dust, dirt, water and oil so the washer feet cannot slide easily. Leveling feet that move or slide on the floor can contribute to excess vibration and noise due to poor contact with the floor.

All four leveling feet must rest solidly on the floor. Attempt to rock the washer from corner to corner to make sure that all four leveling feet are in firm contact with the floor.

1. Position the washer in its final location, taking special care not to pinch, strain, or crush the water and drain lines. Place a level across the top of the washer.

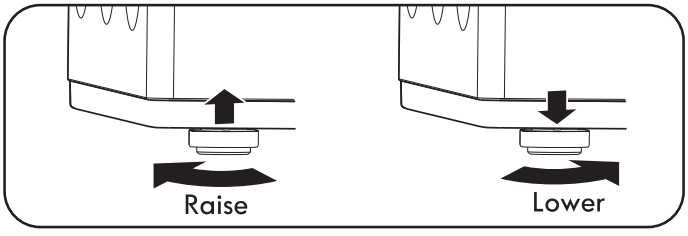

2. Adjust the leveling feet. Turn clockwise to raise the washer or counterclockwise to lower it.

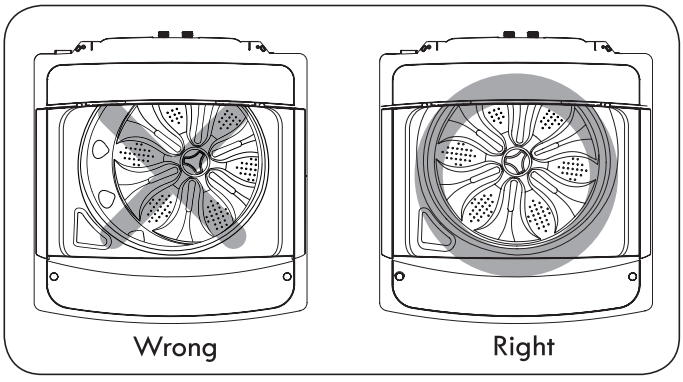

3. To make sure that the washer is properly level, open the lid and look from above to see if the tub is centered. If the tub is NOT centered (as shown in the drawing on the left), readjust the feet. If you have a level, check your washer with the level.

- To check if the washer is level from side to side, place a level on the back edge of the lid.
- To check if the washer is level front to back, place a level at the side of the washer on the edge where the cabinet side meets the top cover. Do not place the level on the top or the lid. Using these surfaces will result in the washer being unlevel.

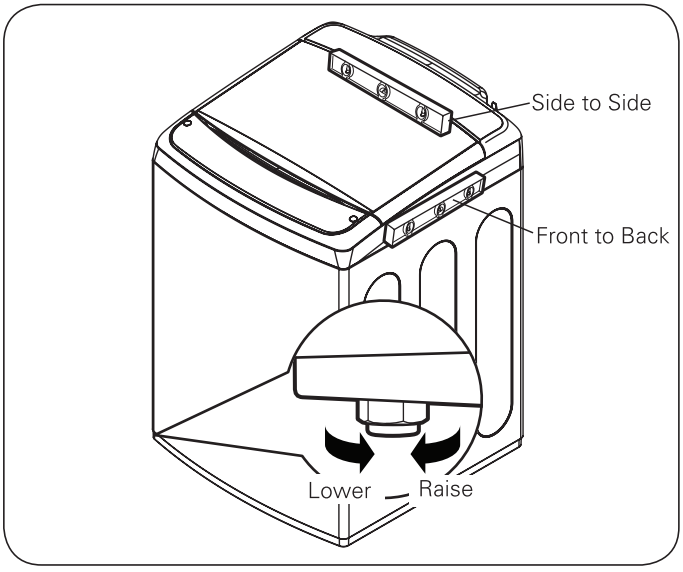

WARNING: To reduce the risk of fire, electric shock, or injury to persons, read and follow this entire Use & Care Guide, including the Important Safety Instructions, before operating this washer.

CONTROL PANEL FEATURES

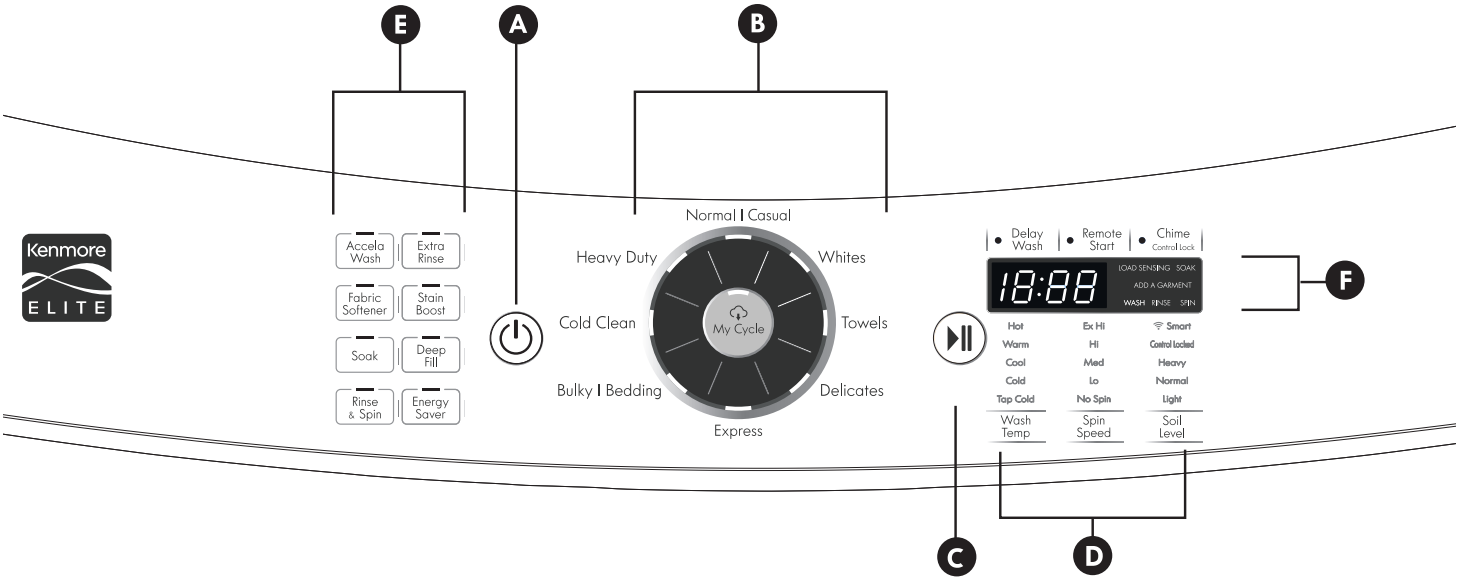

A POWER (ON/OFF) BUTTON

Press to turn the washer ON. Press again to turn the washer OFF. Pressing the POWER button during a cycle will cancel that cycle and any load settings will be lost. The lid will unlock after a brief pause.

NOTE: If the washer remains idle for four minutes after turning the washer off, any water left in the tub will automatically be drained. An alarm will sound one minute prior to draining, and 'dr' will appear on the display. You may restart the washer at this time. However, once the washer initiates draining, all functions will be suspended and cycle settings lost, and 'dr' will be displayed until draining is complete.

B CYCLE SELECTOR BUTTON

Press the cycle button to select the desired cycle. Press the Specialties button repeatedly to cycle through the specialty cycles. Once the desired cycle has been selected, the standard presets will appear in the display. These settings can be adjusted using the cycle setting buttons any time before starting the cycle.

C START/PAUSE BUTTON

Press this button to start the selected cycle. If the washer is running, use this button to pause the cycle without losing the current settings.

NOTE: If you do not press the START/PAUSE button within 60 minutes of selecting a cycle, the washer automatically turns OFF. If the washer is paused during a cycle for more than 4 minutes, the cycle will be cancelled and any water remaining in the tub will be drained. An alarm will sound at 3 minutes to warn you that the tub is about to drain.

D CYCLE MODIFIER BUTTONS

Use these buttons to adjust the settings for the selected cycle. The settings light up above the buttons to show the current selection.

E SPECIAL CYCLE AND OPTION BUTTONS

These buttons allow you to select special cycles or options.

F TIME AND STATUS DISPLAY

The display shows the cycle status and estimated time remaining.

NOTE: To protect your clothing, not all settings are available on all cycle selections.

OPERATING THE WASHER

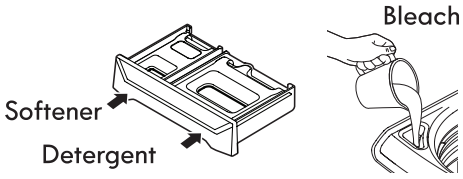

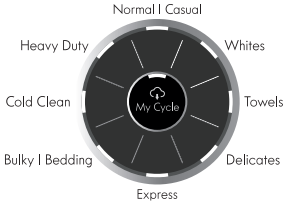

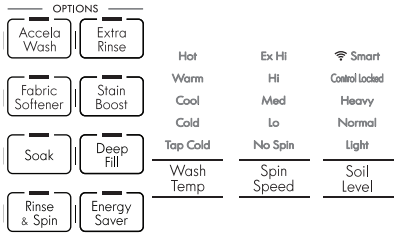

1 SORT LAUNDRY AND LOAD WASHER

Sort laundry by fabric type, soil level, color and load size, as needed. Open the door and load the items into the washer.

2 ADD CLEANING PRODUCT

Add High-Efficiency (HE) detergent to the detergent dispenser drawer. For proper wash performance, always measure the detergent using the measuring device provided by the detergent manufacturer.

3 TURN ON THE WASHER

Press the POWER button to turn ON the washer. The lights above the cycle buttons will illuminate and a chime will sound.

4 SELECT A CYCLE

Press the cycle button directly or the Specialties button repeatedly to select the desired cycle.
The preset Wash Temp, Spin Speed, Soil Level, and Option settings for that cycle will be shown.

5 SELECT CYCLE MODIFIERS & OPTIONS (optional)

Default settings for the selected cycle can now be changed if desired. Use the cycle modifier buttons.

NOTE: To protect your fabrics, not all modifiers are available on all cycles. A different chime will sound and the LED will not come on if the selection is not allowed. Cycle options can also be added by using the option buttons.

6 BEGIN CYCLE

Press the START/PAUSE button to begin the cycle. The door will lock, and the washer will briefly tumble the load without water to measure its weight. Once the weight of the load is measured, the washer will begin the selected wash cycle.

7 ADD A GARMENT LIGHT

The ADD A GARMENT light will illuminate near the beginning of the wash cycle to indicate when it is safe to add items to the load. Press the START/PAUSE button to pause the cycle and add any additional items to the load.

NOTE: It is not recommended to add items unless the ADD A GARMENT light is illuminated, as this could result in poor performance.

8 RESUME CYCLE

Press the START/PAUSE button to resume the wash cycle.

⚠ CAUTION

Do not stand on top of the appliance or place objects (such as laundry, lighted candles, lighted cigarettes, dishes, chemicals, metal objects, etc.) on the appliance.
Failure to follow these cautions can cause fire, electric shock, problems with the product, or injury.

CYCLE GUIDE

The cycle guide below shows the default settings, available options and recommended fabric types for each cycle. Allowable modifier adjustments are shown below the default setting for each cycle.

● = Available Option
= Default Setting

Cycle	Wash Temperature	Spin Speed	Soil Level	Accela Wash	Stain Boost	Extra Rinse	Soak	Fabric Softener	Deep Fill	Energy Saver
Normal/ Casual	Warm	Hi	Normal	●	●	●	●	●	●	●
	Hot Cool Cold Tap Cold	Ex Hi Med No Spin	Heavy Light							
Whites	Hot	Med	Heavy	●		●	●	●	●	
	Warm Cool	Ex Hi Hi Lo No Spin	Normal Light							
Heavy Duty	Warm	Hi	Heavy	●	●	●	●	●	●	
	Hot Cool Cold Tap Cold	Ex Hi Med Lo No Spin	Normal Light							
Bulky/ Bedding	Warm	Lo	Normal			●	●	●		●
	Hot Cool Cold Tap Cold	Med No Spin	Heavy Light							

NOTE:

To protect your garments, not every wash temperature, spin speed, soil level, or option is available with every cycle. A chime will sound and the LED will not light if the selection is not allowed.

When a cycle is selected, the default time for that cycle is displayed. This time will change as modifiers or options are selected. Once the START/PAUSE button is pressed, the washer will measure the size of the load. The estimated time may change once the load size has been measured. The washer automatically adjusts the wash time for the amount of laundry, water pressure, water and other operating conditions.

The Deep Fill option adds water to the wash cycle and raises the water temperature for efficient wash performance.

These cycles use various wash motions to enhance cleaning and/or fabric care performance. The wash motions may sound different at different stages of the wash cycle. This is normal.

The cycle guide below shows the default settings, available options and recommended fabric types for each cycle. Allowable modifier adjustments are shown below the default setting for each cycle.

● = Available Option
= Default Setting

Cycle	Wash Temperature	Spin Speed	Soil Level	Accela Wash	Stain Boost	Extra Rinse	Soak	Fabric Softener	Deep Fill	Energy Saver
Express	Warm	Hi	Light	●		●	●		●	
	Cool Cold Tap Cold	Ex Hi Med Lo No Spin	Heavy Normal							
Cold Clean	Tap Cold	Hi	Normal			●	●	●	●	
		Ex Hi Med Lo No Spin	Heavy Light							
Towel	Warm	Hi	Normal	●	●	●	●	●	●	●
	Hot Cool Cold Tap Cold	Ex Hi Med Lo No Spin	Heavy Light							
Delicates	Tap Cold	Lo	Light			●	●	●	●	
	Warm Cool Cold	No Spin	Heavy Normal							

NOTE:

To protect your garments, not every wash temperature, spin speed, soil level, or option is available with every cycle. A chime will sound and the LED will not light if the selection is not allowed.
When a cycle is selected, the default time for that cycle is displayed. This time will change as modifiers or options are selected. Once the START/PAUSE button is pressed, the washer will measure the size of the load. The estimated time may change once the load size has been measured. The washer automatically adjusts the wash time for the amount of laundry, water pressure, water and other operating conditions.
The Deep Fill option adds water to the wash cycle and raises the water temperature for efficient wash performance.
These cycles use various wash motions to enhance cleaning and/or fabric care performance. The wash motions may sound different at different stages of the wash cycle. This is normal.

SORTING WASH LOADS

⚠ CAUTION

- Do not load items higher than the top edge of the tub. Failure to follow this caution can result in leakage or damage to fabrics.
- Use the BULKY/BEDDING cycle for buoyant or nonabsorbent items such as pillows or comforters. Failure to follow this caution can result in leakage.
- If possible, do not wash any water-resistant items. If you must, please select the Bulky/Bedding cycle.
  - Examples of water-proof or water-resistant items include certain mattress pads, mattress covers, rain gear, camping gear, skiing apparel, outdoor gear and similar items.

Grouping Similar Items

For the best washing results, and to reduce the possibility of damage to clothing, care should be taken to sort the clothing into loads that are made up of similar items. Mixing different fabric types and/or soil levels can result in poor wash performance, color transfer or discoloration, fabric damage or linting. Fabrics should be sorted into groups as described below.

Colors
Sort articles by color. Wash dark clothes together in aseparate load from light colors or whites. Mixing dark clothes with light clothes can result in dye transfer or discoloration of the lighter clothes.

Soil Level
Wash heavily soiled clothing together. Washing lightly soiled clothing in the same load with heavily soiled clothing could result in poor wash performance for the lightly soiled clothing.

Fabric Type
Delicate articles should not be mixed with heavier or sturdier fabric types. Washing delicates in a load with heavy fabrics can result in damage to the more delicate fabrics. Washing heavier fabrics in a delicate load can result in poor wash performance for the heavier fabrics and possible damage to the delicates.

Lint Type
Some fabrics attract and bind lint to them while others give off lint in the laundry process. Avoid mixing these lint collectors and lint producers in the same load. Mixing these fabrics will result in pilling and linting on the lint collectors. (For example, lint collector – knit sweater; lint producer – terrycloth towels.)

Sort Laundry...

by Colors	by Soil	by Fabric	by Lint
Whites	Heavy	Delicates	Lint Producer
Lights	Normal	Easy Care	Lint Collector
Darks	Light	Sturdy	

Fabric Care Labels

Many articles of clothing include a fabric care label. Using the chart below, adjust the cycle and option selections to care for your clothing according to the manufacturer's recommendations.

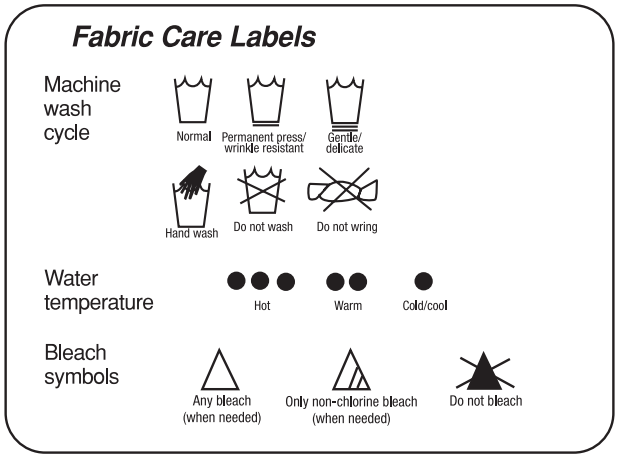

Loading the Washer

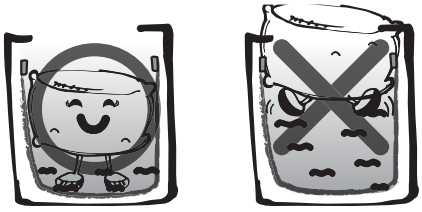

- Check all pockets to make sure that they are empty. Items such as clips, matches, pens, coins, and keys can damage both your washer and your clothes.
- Close zippers, hooks, and drawstrings to prevent these items from snagging or tangling on other clothes.
- Pretreat heavily stained areas for best results.
- Combine large and small items in a load. Load large items first.
- Large items should not be more than half of the total wash load.
- The washer can be fully loaded, but the tub should not be tightly packed with items. The lid of the washer should close easily.
- To prevent an out-of-balance load, do not wash sin gle items. Add one or two similar items to the load. Large, bulky items, such as a blanket, comforter, or bedspread, should be washed individually.
- Waterproof items do wash or spin Waterproof cycle. (i.e. Water resistant clothing, mattress covers, out door clothes, plastic mats etc.)
- The washer will not fill or operate with the lid open.

NOTE: Use the Bedding cycle for large or bulky items such as poly-filled jackets, comforters, pillows, etc. These items may not be as absorbent as other laundry items and should be sorted into a separate wash load for optimal results.

Bulky items should be placed as far down in the tub as possible for optimal results. Always place buoyant items at the bottom of the tub. The washer will auto mati-cally detect the load size. Because of the high efficiency wash system, the water level may not com pletely cover the load.

1. For best performance, load clothes as shown.

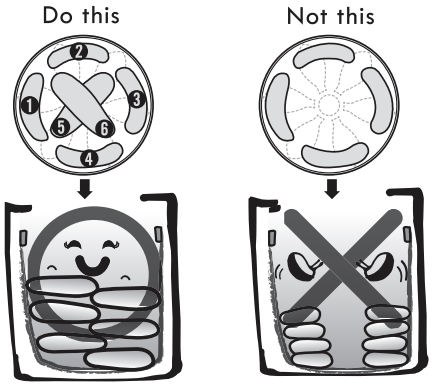

2. Load clothes loosely, and do not load clothes over the maximum guideline on the tub. Clothes need room to circulate in order to get clean.

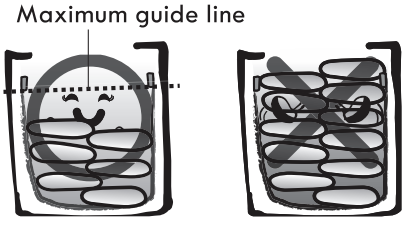

ABOUT THE DISPENSERS

The automatic dispenser consists of two compartments which hold:

- Liquid fabric softener.
- Liquid or powdered detergent for main wash.

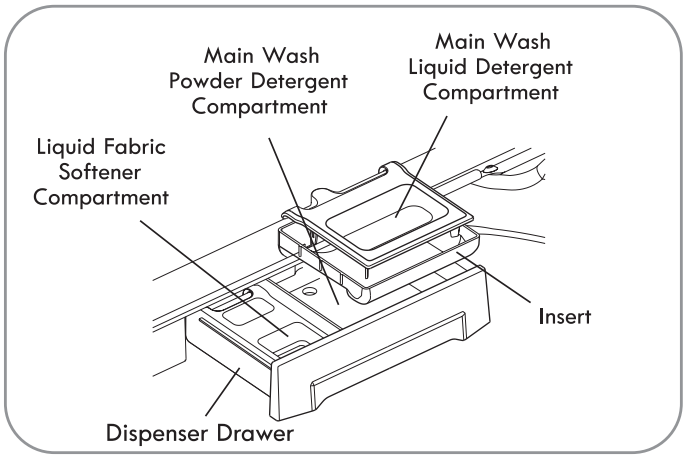

Detergent Pods

Do not place liquid or powered detergent pods in the dispensr drawer. Place the pod in the tub before loading laundry.

Main Wash Detergent Compartment

This compartment holds laundry detergent for the main wash cycle. The detergent is added to the load at the beginning of the cycle. Always use High-Efficiency (HE) detergent with your washing machine. Either powdered or liquid detergent may be used.

Never exceed the manufacturer's recommendations when adding detergent. Using too much detergent can result in detergent buildup in clothing and the washer. When using liquid detergent, make sure the liquid detergent cup and insert are in place. Do not exceed the maximum fill line.
When using powdered detergent, remove the liquid detergent cup from the compartment. Powdered detergent will not dispense with the liquid detergent cup in place.

Fabric Softener Compartment

This compartment holds liquid fabric softener, which is automatically dispensed during the final rinse cycle. Never exceed the manufacturer's recommendations when adding softener. Using too much fabric softener can result in buildup in clothing and the washer.

- Always follow the manufacturer's recommendations when adding fabric softener. Do not exceed the maximum fill line. Using too much fabric softener may stain clothes.
- Dilute concentrated fabric softeners with warm water. Do not exceed the maximum fill line.
- Never pour fabric softener directly onto the load or into the tub.

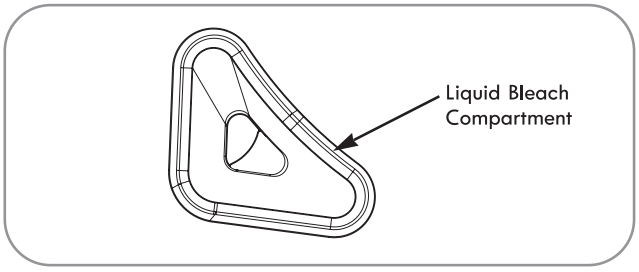

Liquid Bleach Compartment

The bleach dispenser is a separate compartment at the left front of the tub opening. This compartment holds liquid bleach, which is dispensed automatically at the proper time during the wash cycle. Any liquid remaining in the dispenser at the end of the cycle is water, not bleach.

- Do not add powdered bleach to this compartment. The bleach compartment is designed to dispense liquid bleach only. Powdered or liquid color-safe bleach will not dispense properly.
- Always follow the manufacturer's recommendations when adding bleach. Never add more than one cup and do not exceed the maximum fill line since this can cause the bleach to be dispensed immediately, resulting in damage to fabrics. Using too much bleach can damage fabrics.
- Never pour undiluted liquid chlorine bleach directly onto the load or into the tub. Fabric damage can occur.
- Do not use color-safe bleach or Oxi products in the same cycle with liquid chlorine bleach.

⚠ DANGER

Do NOT mix chlorine bleach with ammonia or acids, such as vinegar or rust/scale remover. Mixing chemicals like these can produce a lethal gas, resulting in severe injury or death.

DETERGENT AND DISPENSER USE

A Word About Detergents

High-Efficiency (HE) detergents produce fewer suds, dissolve more efficiently to improve washing and rinsing performance, and help to keep the interior of your washer clean. Using detergent that is not HE may cause oversudsing and unsatisfactory performance which could result in error codes, cycle failure, and machine damage.

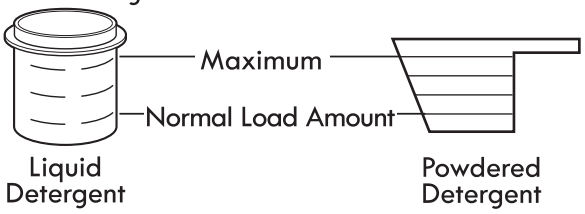

For proper wash performance, always measure the detergent using the measurements provided by the detergent manufacturer.

The normal amount of HE detergent needed, for average loads, is less than ½ of the recommended maximum. **Use less detergent** for soft water, light soil or smaller loads. **Never** use more than the maximum amount recommended by the detergent manufacturer.

Designed to use only High-Efficiency (HE) detergent

IMPORTANT: Your washing machine is designed for use with only High-Efficiency (HE) detergents. HE detergents are formulated specifically for High-Efficiency washers and contain suds-reducing agents. Always look for the HE symbol when purchasing detergent.

IMPORTANT: Not all detergents are the same. Pay careful attention to the amount of detergent used to avoid overusing, poor rinsing and detergent buildup in clothing, and residue buildup that can contribute to odors in the machine. NEVER use a cup or scoop other than the one supplied by the manufacturer of the detergent you are using. Never use more than the maximum amount of detergent recommended by the manufacturer.

Always measure the detergent amount. While HE detergents are designed for this type of washing machine, be careful when measuring the detergent. For most normal loads, no more than ¼ to ½ of cap or scoop of HE detergent should be used.

NOTE: Extra care must be exercised when using **2X** and **3X** concentrated detergents because even a little bit extra can contribute to the problems mentioned above.

NOTE: Detergents designated as HE compatible may not provide optimal results.

Using the Softener and Detergent Dispenser

To add detergent, bleach, and fabric softener to the automatic dispenser:

1. Open the dispenser drawer.
2. Load the laundry products into the appropriate compartments.
3. Close the drawer before starting the cycle.

NOTE: It is normal for a small amount of water to remain in the bleach and softener compartments at the end of the cycle.

IMPORTANT: Do not place or store laundry products, such as detergent, bleach, or liquid fabric softener, on top of your washer or dryer. Wipe up any spills immediately. These products can damage the finish and controls.

Using the Liquid Bleach Dispenser

The bleach dispenser automatically dilutes and dispenses liquid bleach at the proper time in the wash cycle.

1. Check clothing care labels for special instructions.
2. Measure liquid bleach carefully, following instructions on the bottle. High-efficiency washers use less water, so less bleach is needed. One half cup is enough for most loads.
3. Carefully pour the pre-measured amount of bleach directly into the bleach dispenser. If you are using powdered bleach of any kind, pour it directly into the tub before adding the laundry. Never add powdered bleach to the liquid bleach dispenser.

- Never pour undiluted liquid chlorine bleach directly onto clothes or into the tub.
- Do not pour powdered bleach into bleach dispenser.
- Do not place laundry items on top of the bleach dispenser when loading and unloading the washer.
- Always measure and pour bleach carefully. Avoid overfilling or splashing when adding bleach to the dispenser. The maximum capacity of the bleach dispenser is one cup of bleach per wash cycle. Overfilling could result in bleach being dispensed immediately.

TIME AND STATUS DISPLAY

The time and status display shows the estimated time remaining and cycle progress.

A CYCLE STATUS INDICATOR

These LEDs will illuminate when a cycle is selected to indicate which stages will run. When a cycle is running, the LED will blink for the active stage. Once a stage is complete, the LED will turn off. If a cycle is paused, the active LED will stop blinking.

B ESTIMATED TIME REMAINING

When a cycle is selected, the default time for that cycle is displayed. This time will change as modifiers or options are selected. Once the START/PAUSE button is pressed, the washer will measure the size of the load. The estimated time may change once the load size has been measured.

NOTE: The time shown is only an estimate. This time is based on normal operating conditions. Several external factors (load size, room temperature, incoming water temperature, etc.) can affect the actual time.

CYCLE MODIFIER BUTTONS

Each cycle has default settings that are selected automatically. You may also customize these settings using the cycle modifier buttons. Press the button for the desired modifier until the indicator light for the desired setting is lit. The washer automatically adjusts the water level for the type and size of wash load for best results and maximum efficiency.
Due to the high-efficiency nature of this product, water levels may be much lower than expected. This is normal and cleaning/rinsing performance will not be compromised.

NOTE: To protect your garments, not every wash/rinse temperature, spin speed, soil level, or option is available with every cycle. A chime will sound and the LED will not light if a selection is not allowed.

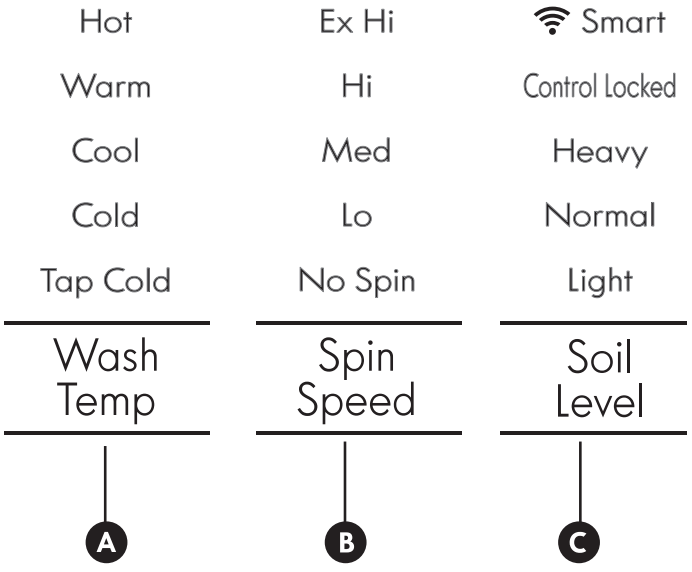

A WASH TEMP

WASH TEMP selects the wash and rinse temperature combination for the selected cycle. Press the WASH TEMP button until the indicator light for the desired setting is lit.

- Select the wash temperature suitable for the type of load you are washing. Follow the garment fabric care labels for best results.
- Cold rinses use less energy. The actual cold rinse temperature depends on the temperature of the cold water at the faucet.

B SPIN SPEED

Higher spin speeds extract more water from clothes, reducing drying time and saving energy.

Press the SPIN SPEED button until the desired speed is selected. Some fabrics, such as delicates, require a slower spin speed. To protect your clothing, not all spin speeds are available for all cycles.

C SOIL LEVEL

Adjusting the soil level setting will modify the cycle times and/or wash actions. Press the SOIL LEVEL button until the desired soil level is selected.

OPTION BUTTONS

Your washing machine features several additional cycle options that customize cycles to meet your individual needs.

1. Turn ON the washer and press the cycle button to select the desired cycle. If the cycle selection is changed after the options have been selected, all settings will be changed to the default settings for the new cycle.
2. Use the cycle modifier buttons to adjust the settings for that cycle.
3. Press the cycle option button(s) for the option(s) you would like to add. The button will light when that option is selected. If the selected option is not allowed for the selected cycle, the chime will sound twice to alert you and the LED will not illuminate.
4. Press the START/PAUSE button to start the cycle. After a brief delay, the lid will lock and the cycle will begin.

NOTE:
- To protect your garments, not every option is available with every cycle.
- If the START/PAUSE button is not pressed within 60 minutes to start the cycle, the control will shut off and all settings will be lost.

ACCELA WASH

Accela Wash

Adding this option reduces the cycle time while maintaining wash performance similar to the same cycle without ACCELA WASH.

STAIN BOOST

Stain Boost

Use this option for heavily soiled loads that need improved stain treatment. When Stain Boost is selected, the wash cycle will begin with warm water to help prevent the setting of certain types of stains. Then, as the cycle progresses, hot water will be added to gradually increase the water temperature to help remove stains that require treatment at higher temperatures

NOTE:
- Best results are obtained with smaller loads (less than 6 lb).
- If you select Stain Boost, the Energy Saver option is not available.

EXTRA RINSE

Extra Rinse

This option will add an extra rinse to the selected cycle. Use this option to help ensure the removal of detergent or bleach residue from fabrics. Liquid fabric softener, if used, is always dispensed in the final rinse.

DEEP FILL

Deep Fill

Use this option to add extra water to the wash cycle for better wash performance and stain treatment of large or bulky items.

NOTE:
- If the washing machine reaches its maximum water level, the DEEP FILL button will have no effect.
- The Deep Fill option can only be selected or deselected while the cycle is running
  Once the Deep Fill option has been added to a cycle, it is saved as a default option on that cycle until you deselect it.
- To deselect the option, press Deep Fill after starting the cycle.

Adding the Deep Fill Option to a Cycle

1. While the cycle is running, press START/PAUSE to pause the cycle.
2. Press DEEP FILL to add Deep Fill as a default option for that cycle.
3. Press START/PAUSE to resume the cycle.

ADD A GARMENT

The ADD A GARMENT light will illuminate during the early stage of the wash cycle to indicate that it is safe to pause the cycle to add more items.

ADD A GARMENT

Once the ADD A GARMENT light goes out, additional laundry should not be added to the load. Doing so may result in unsatisfactory performance because the washer will not compensate for the additional garments.

1. Press the START/PAUSE button to pause the washer.
2. Open the lid after it unlocks.
3. Add your additional items.
4. Close the lid.
5. Press the START/PAUSE button. The cycle will resume after the lid locks.

CHIME

Chime Control Lock

Press repeatedly to adjust the volume of the chime. The chime will sound at the new volume with each press of the button. When no chime is heard, the chime is off. The volume settings are LOW – HIGH – OFF.

FABRIC SOFTENER

Fabric Softener

Fabric softener is dispensed in the final rinse. This washer is designed to save rinse water by using a jet spray rinse system (SMARTRINSE) in NORMAL and HEAVY DUTY cycles. Press the FABRIC SOFTENER button to change the final rinse from spray rinse to regular rinse so that the fabric softener is most effective.

NOTE: Select the FABRIC SOFTENER option or EXTRA RINSE option if liquid fabric softener is used in NORMAL and HEAVY DUTY cycles. Failure to select one of these options will greatly reduce the effectiveness of the softener.

SOAK

Soak

This option provides a maximum 180-minute presoak prior to the start of the selected cycle. Use the SOAK option to presoak garments to help remove difficult spots or stains on fabrics. At the end of the presoak time, the selected cycle will begin with the same water used for the soak.

DELAY WASH

Delay Wash

Once you have selected the cycle and other settings, press this button to delay the start of the wash cycle. Each press of the button increases the delay time by one hour, for up to 19 hours. Once the desired delay time is set, press the START/PAUSE button to start the delay time.

NOTE: If the START/PAUSE button is not pressed to begin the delay time, the washer will automatically shut off after 60 minutes.

RINSE & SPIN

Rinse & Spin

Select this option to rinse and spin a load separately from a regular cycle. This can be helpful in preventing fresh stains from setting in fabrics. You can change the spin speed by pressing the SPIN SPEED button

1. Press the START/PAUSE button to turn on the washer.
2. Press the RINSE & SPIN button.
3. Press the SPIN SPEED button to select the desired spin speed. Selecting NO SPIN is not allowed.
4. Press the START/PAUSE button.

CONTROL LOCK

Chime Control Lock

Use this option to disable the controls. This feature can prevent children from changing cycles or operating the machine. Once the control lock is set, it must be deactivated before any controls, except the POWER button, can be used. Once the washer has shut off, the POWER button will allow the machine to be turned ON, but the controls will still be locked. When the controls are locked, CL will display alternately with the estimated time remaining. Press and hold the CONTROL LOCK button for three seconds to activate or deactivate Control Lock.

SPECIAL DRAIN FEATURE

This washer is equipped with a special feature that is designed to make your washer as safe as possible.
If the washer is paused or shut off while there is still water in the tub, the water will drain after several minutes. This helps keep children safe by reducing the possibility of water remaining in the tub. The washer can be restarted any time before the drain begins.

If no action is taken, the dr error code will display and the water will drain from the tub. Once the washer begins draining the water, the controls are disabled and the drain process cannot be interrupted. Once the water is completely drained, the washer will shut off.

NOTE: In the unlikely event that the washer experiences a problem that causes an error code to be displayed, the washer will still drain after several minutes. However, only the original error code will be displayed.

SMART FEATURES

GETTING CONNECTED

You need the following devices and applications to use the smart features of your appliance.

Required Devices: A wireless connection and a mobile device.

Required Application: Kenmore Smart app.

IMPORTANT: You must download the Kenmore Smart app to your mobile device, connect your Kenmore Elite Smart appliance to the internet, and register the appliance to your account by following the prompts.

Connecting the Washer

Refer to the Quick Start Guide that came with your smart appliance for detailed instructions on creating a Kenmore account and setting up the appliance for connected operation from your mobile device. For additional assistance, visit http://www.kenmore.com/smart

NOTE: When successfully connected to the internet, the SMART icon LED on the control panel will turn on.

REMOTE START

Remote Start

Use a smart phone to control your appliance remotely.

NOTE: You must first close the door and connect to the internet to use this function. The SMART icon LED should be illuminated.
Using Remote Start

1. Select a cycle and options.
2. Press REMOTE START. The Remote Start LED will turn on.
3. Start the washer from the application on your smart phone. (For more information, see the booklet shipped with your washer.) If you do not start the washer remotely, the washer will wait to start the cycle until the START button is pressed.

MY CYCLE

My Cycle

Use the My Cycle feature in the Kenmore Smart app to select and download additional specialized cycles to your washing machine. The default MY CYCLE on the washer is SMALL LOAD.

Cycle	Fabric & Load Type	Wash Tempera-ture	Spin Speed	Soil Level	Accela Wash	Stain Boost	Extra Rinse	Soak	Fabric Soft-ener	Deep Fill	Energy Saver
Small Load (Default)	For small loads of laundry (less than 3 lb)	Warm Hot Cool Cold Tap Cold	Med Ex Hi Hi No Spin	Light Heavy Normal	●	●	●	●	●	●	●
Single Item	Quickly washes a single item	Cold Warm Cool Tap Cold	Hi Ex Hi Med Lo No Spin	Light Heavy Normal	●		●	●		●	
Wrinkle Stop /Gentle Wave	Delicate wash motion to minimize wrinkles	Warm Cool Cold Tap Cold	Lo No Spin	Light Heavy Normal			●	●	●	●	
Rapid Clean	For lightly soiled and small loads	Tap Cold Warm Cool Cold	Hi Ex Hi Med Lo No Spin	Light Heavy Normal	●		●	●		●	
Sweat Stains	Removes sweat stains and odor	Warm Hot Cool Cold Tap Cold	Hi Ex Hi Med Lo No Spin	Normal Heavy Light	●	●	●	●	●	●	
Swimwear	Helps remove chlorine or salt from swimwear	Cold Warm Cool Cold Tap Cold	Lo No Spin	Light Heavy Normal			●	●	●	●	
Curtains	For lightly soiled curtains	Warm Hot Cool Cold Tap Cold	Med Lo No Spin	Light Heavy Normal			●	●	●		●

Cycle	Fabric & Load Type	Wash Tempera-ture	Spin Speed	Soil Level	Accela Wash	Stain Boost	Extra Rinse	Soak	Fabric Soft-ener	Deep Fill	Energy Saver
Dress Shirts	Designed specifically for dress shirts	Hot	Hi	Heavy	●	●	●	●	●	●	
		Warm Cool Cold Tap Cold	Ex Hi Med Lo No Spin	Normal Light							
Collar Stains	For removing collar stains	Warm	Hi	Heavy	●	●	●	●	●	●	
		Hot Cool Cold Tap Cold	Ex Hi Med Lo No Spin	Normal Light							
Pillow Covers	Designed specifically for pillow covers	Hot	Hi	Normal	●	●	●	●	●	●	●
		Warm Cool Cold Tap Cold	Ex Hi Med No Spin	Heavy Light							
Lingerie	Designed specifically for Lingerie	Warm	Lo	Light			●	●	●	●	
		Cool Cold Tap Cold	No Spin	Heavy Normal							
Baby Wear	Helps remove solid stains from baby wear with clean rise performance	Warm	Hi	Normal	●	●	●	●	●	●	●
		Hot Cool Cold Tap Cold	Ex Hi Med No Spin	Heavy Light							
Children's Wear	Helps remove heavy soil from kids' clothes	Warm	Hi	Heavy	●	●	●	●	●	●	
		Hot Cool Cold Tap Cold	Ex Hi Med No Spin	Normal Light							
Juice and Food Stains	Designed specifically for Juice and food stains	Hot	Hi	Heavy	●	●	●	●	●	●	
		Warm Cool Cold Tap Cold	Ex Hi Med Lo No Spin	Normal Light							

MY CYCLE (CONTINUED)

Cycle	Fabric & Load Type	Wash Temper-ature	Spin Speed	Soil Level	Accela Wash	Stain Boost	Extra Rinse	Soak	Fabric Softener	Deep Fill	Energy Saver
Baby Bibs	Designed specifically for baby clothes	Hot	Med	Normal	●	●	●	●	●	●	●
		Warm Cool Cold Tap Cold	Ex Hi Hi No Spin	Heavy Light							
Pet Hair and Odor	Removes pet hair and odor	Warm	Ex Hi	Light	●		●	●		●	
		Cool Cold Tap Cold	Hi Med Lo No Spin	Heavy Normal							
Collars and Cuffs	Helps remove stains from collars and cuffs	Hot	Med	Heavy	●	●	●	●	●	●	
		Warm Cool Cold Tap Cold	Ex Hi Hi Lo No Spin	Normal Light							

FCC NOTICE

(for transmitter module contained in this product)

This equipment has been tested and found to comply with the limits for a Class B digital device, pursuant to Part 15 of the FCC Rules. These limits are designed to provide reasonable protection against harmful interference in a residential installation. This equipment generates, uses, and can radiate radio frequency energy and, if not installed and used in accordance with the instructions, may cause harmful interference to radio communications. However, there is no guarantee that interference will not occur in a particular installation. If this equipment does cause harmful interference to radio or television reception, which can be determined by turning the equipment off and on, the user is encouraged to try to correct the interference by one or more of the following measures:

- Reorient or relocate the receiving antenna.
- Increase the separation between the equipment and receiver.
- Connect the equipment to an outlet on a circuit different from that to which the receiver is connected.
- Consult the dealer or an experienced radio/TV technician for help.

This device complies with part 15 of the FCC rules. Operation is subject to the following two conditions:

(1) this device may not cause harmful interference, and

(2) this device must accept any interference received, including interference that may cause undesired operation of the device.

Any changes or modifications in construction of this device which are not expressly approved by the party responsible for compliance could void the user's authority to operate the equipment.

FCC RF Radiation Exposure Statement
This equipment complies with FCC radiation exposure limits set forth for an uncontrolled environment. This transmitter must not be co-located or operating in conjunction with any other antenna or transmitter.

This equipment should be installed and operated with a minimum distance of 20 cm (7.8 inches) between the antenna and your body. Users must follow the specific operating instructions for satisfying RF exposure compliance.

Labeling

This device includes the following module.

Contains FCC ID: 2AHU4-KMTD17

Wireless LAN module Specifications

Model	2AHU4-KMTD17
Frequency Range	2412 MHz - 2462 MHz
Frequency Range	IEEE 802.11b: 18.26 dBm
	IEEE 802.11g: 20.10 dBm
	IEEE 802.11n: 20.07 dBm

OPEN SOURCE SOFTWARE NOTICE

To obtain the source code that is contained in this product under GPL and other open source licenses, visit http://kenmore.com/opensource. In addition to the source code, all referred license terms, warranty disclaimers, and copyright notices are available for download.

WARNING: To reduce the risk of fire, electric shock, or injury to persons, read and follow this entire Use & Care Guide, including the Important Safety Instructions, before operating this washer.

- **Unplug the washer before cleaning to avoid the risk of electric shock.** Failure to follow this warning can cause serious injury, fire, electric shock, or death.
- **Never use harsh chemicals, abrasive cleaners, or solvents to clean the washer.** They will damage the finish.

REGULAR CLEANING

Cleaning the Exterior

Proper care of your washer can extend its life. The outside of the machine can be cleaned with warm water and a mild, nonabrasive household detergent.
Immediately wipe off any spills with a soft, damp cloth.

IMPORTANT: Do not use solvents, cleaning alcohols, or similar products. Never use steel wool or abrasive cleaners because they can damage the surface.

Care and Cleaning of the Interior
Use a towel or soft cloth to wipe around the washer lid opening and lid glass.
Always remove items from the washer as soon as the cycle is complete. Leaving damp items in the washer can cause wrinkling, color transfer, and odor.

Storing the Washer

If the washer will not be used for an extended period of time and is in an area that could be exposed to freezing temperatures, perform the following steps to protect the washer from damage.

1. Turn OFF the water supply.
2. Disconnect hoses from water supply and drain water from hoses.
3. Plug the power cord into a properly grounded electrical outlet.
4. Add 1 gallon of nontoxic recreational vehicle (RV) antifreeze to the empty tub and close the lid. NEVER use automotive antifreeze.
5. Press the POWER button, then press the RINSE & SPIN button. Press the START/PAUSE button to activate the drain pump. Allow the drain pump to run for one minute, then press the POWER button to shut off the washer. This will expel some of the antifreeze, leaving enough to protect the washer from damage.
6. Unplug the power cord, dry the tub interior with a soft cloth, and close the lid.
7. Remove the inserts from the dispenser. Drain any water in the compartments and let them dry.
8. Store the washer in an upright position.
9. To remove the antifreeze from the washer after storage, run a complete EXPRESS WASH cycle using detergent. Do not add laundry to this cycle.

Removing Mineral Buildup

If you live in an area with hard water, mineral scale can form on internal components of the washer. Use of a water softener is recommended in areas with hard water.

Use a descaler, such as Washer Magic®, to remove visible mineral buildup. After descaling, always run an Express Wash cycle with detergent before washing clothing.

Mineral scale and other spots may be removed from the stainless steel tub using a stainless steel cleaner. Do NOT use steel wool or abrasive cleaners.

Leave the Lid Open

If the washer will not be used for several days, leave the lid open overnight to allow the tub to dry.

MAINTENANCE

Cleaning the Water Inlet Filters

If the washer does not fill properly, an error message will show on the display. The inlet valve filter screens could be plugged by hard water scale, sediment in the water supply, or other debris.

NOTE: The inlet screens protect the delicate parts of the inlet valve from being damaged by particles that could enter the valves with the water supply. Operating the washer with these filters removed could cause a valve to stick open resulting in flooding and/or property damage.

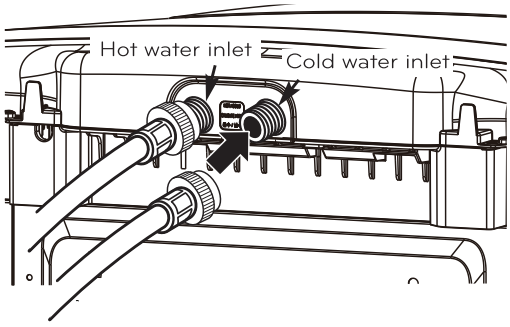

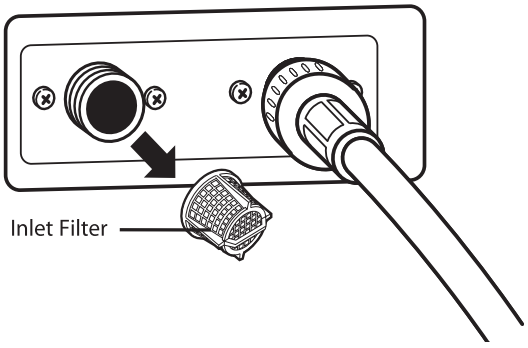

1. Turn OFF both water faucets completely. Unscrew the hot and cold water lines from the back of the washer.

IMPORTANT: Only use inlet hoses provided by KENMORE. Aftermarket hoses are not guaranteed to fit or function correctly. Other hoses may not tighten correctly and could cause leaks. Subsequent damage to product or property will not be covered under the terms of the product warranty. Hoses can be ordered by calling 1-844-553-6667.

2. Carefully remove the filters from the water valves and soak them in white vinegar or a lime scale remover, following the manufacturer's instructions. Be careful not to damage the filters while cleaning.
3. Rinse thoroughly before reinstalling. Press the filters back into place.
4. Before reattaching the hoses, flush the hoses and water lines by running several gallons of water into a bucket or drain.

CLEANING THE WASHER

Proper Use of Detergent

Using too much detergent is a common cause of laundry problems. Today's detergents are formulated to be effective without visible sudsing. Be sure to carefully read and follow manufacturer's recommendations for how much detergent to use in your wash. You can use less detergent if you have soft water, a smaller load, or a lightly soiled load.

NOTE: Use only low-sudsing, high-efficiency detergent. These detergents can be identified by the HE logo.

Care and Cleaning of the Washer

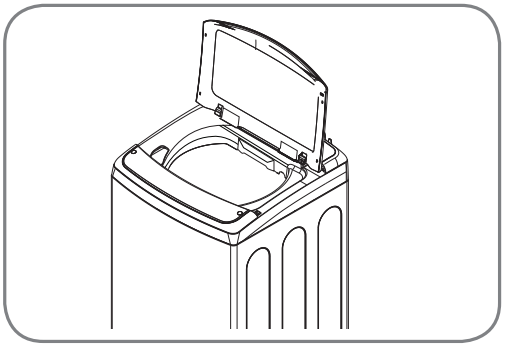

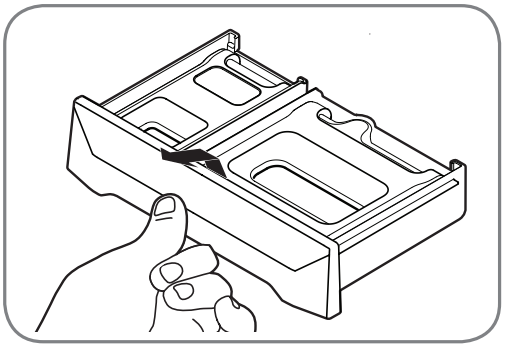

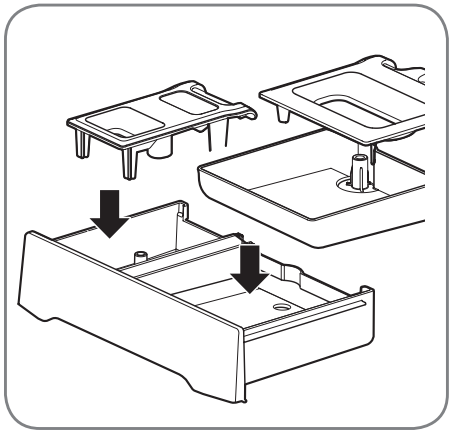

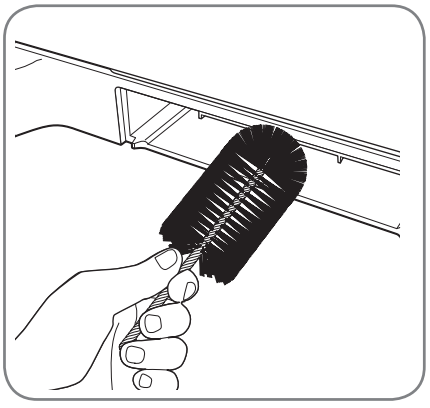

Lid: Wash with a damp cloth on the outside and inside and then dry with a soft cloth.

Exterior: Immediately wipe off any spills. Wipe with damp cloth. Do not touch the surface or the display with sharp objects.

Moving and Storage: Contact a service technician to remove water from the drain pump and hoses. Reinstall the foam tub block to protect the washer from damage while moving. Do not store the washer where it will be exposed to outdoor weather conditions.

Long Vacations: Be sure water supply is shut off at the faucets. Follow the instructions if the washer will be exposed to freezing temperatures.

Dispenser Drawer: Detergent and fabric softener may build up in the dispenser drawer. Remove the drawer and inserts and check for buildup once or twice a month.

1. Remove the drawer by pulling it straight out until it stops. Lift up on the front of the drawer and pull it completely out.

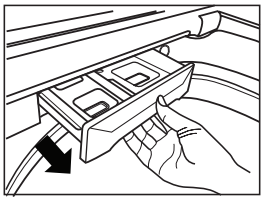

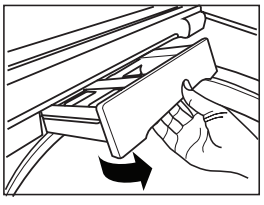

2. Remove the inserts from the two compartments. Rinse the inserts and the drawer with warm water to remove buildup from laundry products.
3. To clean the drawer opening, use a small, non-metal brush to clean the recess. Remove all residue from the upper and lower parts of the recess.
4. Return the inserts to the proper compartments and replace the drawer. Set the drawer into the opening at an angle as shown above, then lower it and slide it into place.

Should you experience any problems with your washing machine, it has the capability of transmitting data via your telephone to the Diagnostics Team. This gives you the capability of speaking directly to our specially trained technicians. The technician records the data transmitted from your machine and uses it to analyze the issue, providing a fast and effective diagnosis.

If you experience problems with your washer, call 1-844-553-6667. Only use the Diagnostics feature when instructed to do so by the Diagnostics Team. The transmission sounds that you will hear are normal and sound similar to a fax machine.

Diagnostics cannot be activated unless your washing machine is turned on by pressing the POWER button. If your washing machine is unable to turn on, then troubleshooting must be done without using Diagnostics.

Using DIAGNOSTICS

First, call 1-844-553-6667. If the number of the phone you are using is on file and is associated with your washer, you will be quickly relayed to a Diagnostics team agent. Follow the technician's instructions and perform the following steps only when requested to by the Diagnostics Team agent.

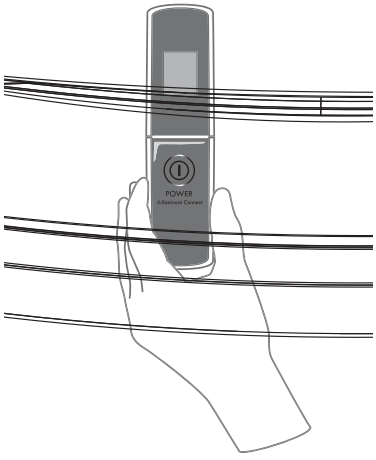

HOLD the mouthpiece of your phone over the POWER button, when instructed to do so by the call center, no more than one inch from (but not touching) the machine.

NOTE: Do not press any other buttons or turn the cycle selector knob.

PUSH and hold the WASH TEMP button while continuing to hold your phone to the POWER button.

LISTEN for three beeps. After you hear the three beeps, release the WASH TEMP button. Keep the phone in place until the tone transmission has finished. This takes about 6 seconds, and the display will count down the time. Once the countdown is over and the tones have stopped, resume your conversation with the technician, who will then be able to assist you in using the information transmitted for analysis.

NOTE:

- For best results, do not move the phone while the tones are being transmitted.
- If the call center agent is not able to get an accurate recording of the data, you may be asked to try again.

NORMAL SOUNDS YOU MAY HEAR

The following sounds may be heard while the washer is operating. They are normal.

Clicking:
Lid lock relay when the lid locks and unlocks.

Spraying or hissing:
Water spraying or circulating during the cycle.

Humming or gurgling:
Drain pump is pumping water from the washer at times during a cycle.

BEFORE CALLING FOR SERVICE

Your washing machine is equipped with an automatic error-monitoring system to detect and diagnose problems at an early stage. If your washer does not function properly or does not function at all, check the following before you call for service:

Problem	Possible Cause	Solutions
Rattling and clanking noise	Foreign objects, such as keys, coins, or safety pins, may be in tub or pump.	Stop washer, check tub and drain filter for foreign objects. If noise continues after washer is restarted, call for service.
Thumping sound	Heavy wash loads may produce a thumping sound.	This is normal. If sound continues, washer is probably out of balance. Stop and redistribute wash load.
	Washer load may be out of balance.	Pause the cycle and redistribute the load after the lid unlocks.
Vibrating noise	Packaging materials were not removed.	See the UNPACKING AND REMOVING SHIPPING MATERIAL section in the installation requirements.
	Wash load may be unevenly distributed in the tub.	Pause the cycle and redistribute the load after the lid unlocks.
	Not all leveling feet are resting firmly and evenly on the floor.	See Leveling the Washer in the Installation Instructions.
	Floor not rigid enough.	Make sure that the floor is solid and does not flex. See Flooring in the Installation Requirements.
Water leaking	Inlet hose connection is loose at faucet or washer.	Check hoses for leaks, cracks and splits.
		Check and tighten hose connections.
	House drain pipes are clogged.	The washer pumps out water very rapidly. Check for water backing up out of the drain pipe during drain. If water is seen coming out of the drain, check for proper drain hose installation and check for restrictions in the drain. Contact a plumber to repair drain pipe.
	Drain hose has come out of drain or is not inserted far enough.	Tie drain hose to inlet hose or standpipe to prevent it from coming out during drain. For smaller drain pipes, insert the drain hose into the pipe as far as the drain hose flange. For larger drain pipes, insert the drain hose into the pipe 1-2 inches past the flange.
	A large item such as a pillow or blanket is above the top of the tub.	Use the BULKY/BEDDING cycle for large or bulky items Use extra care and never wash more than half a load of items that float such as pillows.
		Stop the washer and check the load. Make sure the load does not crest above the top edge of the tub.
Wrinkling	Washer not unloaded promptly.	Always remove items from the washer as soon as the cycle is complete.
	Washer overloaded.	The washer can be fully loaded, but the tub should not be tightly packed with items. The lid of the washer should close easily.
	Hot and cold water inlet hoses are reversed.	Hot water rinse can set wrinkles in garments. Check the inlet hose connections

BEFORE CALLING FOR SERVICE (continued)

Problem	Possible Cause	Solutions
Excessive sudsing	Too much detergent or incorrect detergent.	HE detergents are formulated specifically for High-Efficiency washers and contain suds-reducing agents. Only use detergent with the High-Efficiency (HE) logo. For detergent quantities refer to the How to Use section.
Staining	Bleach or softener dispensed too soon.	Dispenser compartment is overfilled causing bleach or softener to dispense immediately. ALWAYS measure bleach to prevent overfilling - one cup maximum. Dispenser drawer closed too quickly causing softener to dispense immediately.
	Bleach or softener was added directly to the wash load in the tub.	Always use the dispensers to ensure that laundry products are properly dispensed at the right time in the cycle.
	Washer was not unloaded promptly.	Always remove items from the washer as soon as possible after the cycle is complete.
	Clothes were not properly sorted.	Always wash dark colors separately from light colors and whites to prevent discoloration. Never wash heavily soiled items washed with lightly soiled items.
Washer will not turn ON **NOTE:** If the washer stopped during a cycle due to a loss of power, the washer will resume the cycle where it stopped when the power is restored.	Power cord is not properly plugged in.	Make sure that the plug is plugged securely into a grounded, 3-prong, 120-VAC, 60-Hz outlet.
	House fuse is blown, circuit breaker has tripped, or power outage has occurred.	Reset circuit breaker or replace fuse. Do not increase fuse capacity. If the problem is a circuit overload, have it corrected by a qualified electrician.
	House fuse is blown, circuit breaker has tripped, due to multiple appliances on one outlet.	Reset circuit breaker or replace fuse. If more than one appliance is connected to the outlet, call an electrician to have an additional circuit installed.
Wash cycle time is longer than usual	The washer automatically adjusts the wash time for the amount of laundry, water pressure and other operating conditions.	This is normal. The washer adjusts cycle time automatically to provide optimal results for the selected cycle. The time remaining shown in the display is only an estimate. Actual time may vary.
Musty or mildewy odor in washer	Incorrect or too much detergent has been used.	Use only High-Efficiency (HE) detergent in accordance with the manufacturer's instructions.
	Inside of tub was not cleaned properly.	Run the CLEAN WASHER cycle regularly.
Water leaks	Oversudsing of detergent.	Oversudsing may create leaks, and may be caused by the type and amount of detergent used. High-Efficiency detergent is the only detergent recommended. Make sure that detergent and any additives are put into the correct dispenser compartments. The normal amount of detergent to use is ¼ to ½ of the maximum amount recommended by the detergent manufacturer. Always reduce the amount of detergent if the load is small or lightly soiled, or if your water is very soft. Never use more than the maximum amount recommended by the detergent manufacturer.

BEFORE CALLING FOR SERVICE (continued)

Problem	Possible Causes	Solutions
Washer will not operate	Control panel has powered off due to inactivity.	This is normal. Press the POWER button to turn the washer on.
	Washer is unplugged.	Make sure cord is plugged securely into a working outlet.
	Water supply is turned off.	Turn both hot and cold faucets fully on.
	Controls are not set properly.	Make sure the cycle was set correctly, close the lid and press the START/PAUSE button.
	Lid is open	The washer will not operate if the lid is open. Close the lid and make sure that nothing is caught under the lid preventing it from closing completely.
	Circuit breaker/fuse is tripped/blown.	Check house circuit breakers/fuses. Replace fuses or reset breaker. The washer should be on a dedicated branch circuit. The washer will resume the cycle where it stopped once power is restored.
	Control needs to be reset.	Press the POWER button, then re-select the desired cycle and press the START/PAUSE button.
	START/PAUSE was not pressed after a cycle was set.	Press the POWER button then re-select the desired cycle and press the START/PAUSE button. The washer will shut off if the START/PAUSE button is not pressed within four minutes.
	Extremely low water pressure.	Check another faucet in the house to make sure that household water pressure is adequate.
	Washer is too cold.	If the washer has been exposed to temperatures below freezing for an extended period of time, allow it to warm up before pressing the POWER button. Otherwise, the display will not come on.
Washer not filling properly	Filter clogged.	Make sure the inlet filters on the fill valves are not clogged. Refer to the filter cleaning instructions.
	Inlet hoses may be kinked	Check that inlet hoses are not kinked or clogged.
	Energy efficiency.	This is an energy-efficient washer. As a result, the temperature settings for this washer may be different than non-energy-efficient washers.
	Insufficient water supply.	Make sure that both hot and cold water faucets are turned on all the way.
	The washer lid is open.	The washer will not operate if the lid is open. Close the lid and make sure that nothing is caught under the lid preventing it from closing completely.
	Hot and cold inlet hoses are reversed.	Check inlet hose connections. Make sure the hot water supply is connected to the hot inlet valve, and the cold water supply is connected to the cold inlet valve.
	Water level is too low.	This is a high efficiency washer. The water will not normally cover the clothes. The fill level is optimized for the wash motion to achieve the best wash performance.

BEFORE CALLING FOR SERVICE (continued)

Problem	Possible Causes	Solutions
Washer will not drain water	Kinked drain hose.	Ensure that the drain hose is not kinked.
	Drain located higher than 96 in. above the floor.	Make sure that the drain hose is no higher than 8 ft. above the bottom of the washer and is no more than 5 ft. away from the washer.
Poor stain removal	Proper options not selected.	Heavier soils and tougher stains may require extra cleaning power. Select SOAK to boost the cleaning power of the selected cycle.
	Previously set stains.	Articles that have previously been washed may have stains that have been set. These stains may be difficult to remove and may require hand washing or pre-treating to aid in stain removal.
Bleach does not dispense	Bleach dispenser cover is not properly installed.	Make sure that the bleach cover is properly installed and snapped into place before the beginning of the cycle.
	Bleach dispenser is dirty or clogged.	Lift out the bleach dispenser cover and clean out the reservoir. Lint and other foreign debris that collects in the inside the dispenser may prevent proper dispensing of the bleach.
Premature dispensing of bleach	Bleach dispenser filled for future load.	You cannot store bleach in the dispenser for future use. The bleach will be dispensed every load.
	Overfilling the bleach dispenser.	Overfilling the bleach dispenser will cause the bleach to dispense immediately, which will damage items in the tub. ALWAYS measure bleach, but never fill above the MAX line on the dispenser. One cup of bleach is normal, but never add more than one cup.
Incomplete or no dispensing of detergent	Detergent compartments clogged from incorrect filling.	Make sure that detergent and additives are put into the correct dispenser compartments. If liquid detergent is used, make sure that the liquid detergent cup and insert are in the detergent compartment. If powdered detergent is used, make sure that the liquid detergent cup and insert are not used. For all detergent types, always make sure that the dispenser drawer is fully closed before the start of the cycle.
	Too much detergent used.	Make sure that the suggested amount of detergent is used per the manufacturer's recommendations. You may also dilute the detergent with water to the maximum fill line on the compartment to avoid clogging. Use only HE (High- Efficiency) detergent. **NOTE:** Always use as little detergent as possible. High-Efficiency washers need very little detergent to achieve optimum results. Using too much detergent will cause poor wash and rinse performance and may contribute to odors in washer.
	Insufficient water supply.	Make sure that both hot and cold water faucets are turned on all the way.
	Normal residue.	It is normal for a small amount of detergent to remain in the dispenser. If this residue builds up it can interfere with normal dispensing of products. Refer to the cleaning instructions.
Water leaks every load	Hoses not installed correctly.	Check all fill and drain hose connections to ensure that they are tight and secure.

BEFORE CALLING FOR SERVICE (continued)

Error Codes

Problem	Possible Cause	Solutions
The display shows: dE	The lid is not closed properly.	Make sure that the lid is closed properly and press the START/PAUSE button. After starting a cycle, it may take a few moments before the tub begins to turn or spin. The washer will not spin unless the lid is locked. If the lid is closed and the lid lock error message is displayed, call for service.
The display shows: dL	Lid lock switch error.	Make sure that the lid is closed properly and press the START/PAUSE button. The washer will not operate unless the lid is locked. Make sure that nothing is caught under the lid, including shipping material or clothing. Make sure that the latch mechanism is fully retracted. If the lid is closed and the lid lock error message is displayed, call for service.
The display shows: dr	Special Drain Feature.	If the washer is paused during a cycle for more than 4 minutes, the cycle will be cancelled and any water remaining in the tub will be drained. An alarm will sound at 3 minutes to warn you that the tub is about to drain.
Washer fills with water slowly or not at all, or the display shows: IE	Water supply faucets are not fully open.	Make sure that the water faucets are fully open.
	Water line hoses are kinked, pinched, or crushed.	Make sure the hoses are not kinked or pinched. Be careful when moving the washer during cleaning and maintenance.
	Water inlet filters are clogged.	Clean the inlet filters. See Maintenance in the Care and Cleaning section.
	Water supply pressure to faucet or house is too low.	Check another faucet in the house to make sure that household water pressure is adequate and flow is not restricted. Disconnect the inlet hose from the washer and run a few gallons of water through the hose to flush the water supply lines. If flow is too low, contact a plumber to have the water lines repaired.
	Water supply connected with leak-limiting hoses.	Hoses designed to limit leaks can trip falsely and prevent the washer from filling. The use of leak limiting hoses is not recommended.

NOTE: If an error message is displayed for four minutes, the water in the tub will automatically drain. An alarm will sound one minute prior to draining and the original error code will continue to be displayed.

BEFORE CALLING FOR SERVICE (continued)

Problem	Possible Cause	Solutions
Water in the washer drains slowly or not at all, or the display shows: OE	Drain hose is kinked, pinched, or clogged. Drain discharge is more than 96 inches above bottom of washer.	Make sure the drain hose is free of clogs, kinks, etc., and is not pinched behind or under the washer. Adjust or repair drain. Maximum drain height is 96 inches (8 ft.)
The display shows: ub	The washer has detected an out of balance load.	If the washer detects a load that is too far out of balance to spin, it will display this code while it is attempting to rebalance the load. The washer will add water and try to redistribute the load automatically. This display is for your information only, and no action is required.
The display shows: UE	If the ub rebalance (see above) is not successful, this error will be displayed. The load is too small. Heavy articles are mixed with lighter items. The load is out of balance.	The automatic attempt to rebalance the load was not successful. The cycle has been paused to allow the load to be manually adjusted. Small loads may need additional items to be added to allow the washer to balance the loads. The load may have heavy items loaded with lighter items. Always try to wash articles of somewhat similar weight to allow the washer to evenly distribute the weight of the load for spinning. Manually redistribute the load if articles have become tangled preventing the automatic distribution from working properly.
The display shows: tE	Control error.	Unplug the washer and wait 60 seconds. Reconnect power and try again. If the error reappears, call for service.
The display shows: FE	Water level is too high due to a faulty water valve.	Close the water faucets, unplug the washer, and call for service.
The display shows: PE	The water level sensor is not working correctly.	Close the water faucets, unplug the washer, and call for service.
The display shows: LE	A motor error has occurred.	Allow the washer to stand for 30 minutes and then restart the cycle. If the LE error code persists, call for service.
The display shows: E6	Clutch error.	Mechanical failure. Unplug the washer and call for service.
The display shows: LE1	Foreign objects, such as coins, pins, clips, etc., caught between the wash plate and the inner basket.	Turn off the washer and then press the Power button. Press the spin speed button without selecting a cycle to drain and spin the load. When the spin is complete, remove the clothes and then find and remove any objects caught in the wash plate. Always check pockets, etc., before washing to prevent error codes or damage to the washer or clothing.

KENMORE ELITE LIMITED WARRANTY

WITH PROOF OF SALE the following warranty coverage applies when this appliance is correctly installed, operated and maintained according to all supplied instructions.

One Year on Appliance

FOR ONE YEAR from the date of sale this appliance is warranted against defects in material or workmanship. A defective appliance will receive free repair. If the appliance cannot be repaired it will be replaced free of charge.

Lifetime on Washer Drive Motor

FOR AS LONG AS IT IS USED from the date of sale, a free replacement will be supplied for a defective washer drive motor.* If the defect appears within the first year, a new motor will be installed at no charge.
If the defect appears after the first year, a new motor will be supplied but not installed at no charge. This Lifetime warranty covers only the washer drive motor, and does not apply to any other related component or mechanism. You are responsible for the labor cost of motor installation after the first year from the date of sale.
*Defects must be verified by a Sears authorized service technician.

For warranty coverage details to obtain free repair, visit the web page:
www.kenmore.com/warranty

All warranty coverage applies for only 90 DAYS from the sale date if this appliance is ever used for other than private household purposes.

This warranty covers ONLY defects in material and workmanship, and will NOT pay for:

1. Expendable items that can wear out from normal use, including but not limited to filters, belts, bags or screw-in base light bulbs.
2. A service technician to clean or maintain this appliance, or to instruct the user in correct appliance installation, operation and maintenance.
3. Service calls to correct appliance installation not performed by Sears authorized service agents, or to repair problems with house fuses, circuit breakers, house wiring, and plumbing or gas supply systems resulting from such installation.
4. Damage to or failure of this appliance resulting from installation not performed by Sears authorized service agents, including installation that was not in accord with electrical, gas or plumbing codes.
5. Damage to or failure of this appliance, including discoloration or surface rust, if it is not correctly operated and maintained according to all supplied instructions.
6. Damage to or failure of this appliance, including discoloration or surface rust, resulting from accident, alteration, abuse, misuse or use for other than its intended purpose.
7. Damage to or failure of this appliance, including discoloration or surface rust, caused by the use of detergents, cleaners, chemicals or utensils other than those recommended in all instructions supplied with the product.
8. Damage to or failure of parts or systems resulting from unauthorized modifications made to this appliance.
9. Service to an appliance if the model and serial plate is missing, altered, or cannot easily be determined to have the appropriate certification logo.

Disclaimer of implied warranties; limitation of remedies

Customer's sole and exclusive remedy under this limited warranty shall be product repair or replacement as provided herein. Implied warranties, including warranties of merchantability or fitness for a particular purpose, are limited to one year on the appliance and for as long as used on the washer drive motor, or the shortest period allowed by law. Seller shall not be liable for incidental or consequential damages. Some states and provinces do not allow the exclusion or limitation of incidental or consequential damages, or limitation on the duration of implied warranties of merchantability or fitness, so these exclusions or limitations may not apply to you.

This warranty applies only while this appliance is used in the United States.

This warranty gives you specific legal rights, and you may also have other rights which vary from state to state.

Sears Brands Management Corporation, Hoffman Estates, IL 60179

Kenmore®

Customer Care Hotline

To schedule in-home repair service
or order replacement parts

Para pedir servicio de reparación
a domicilio, y ordenar piezas

1-844-553-6667

www.kenmore.com

Kenmore®