ENGLISH

INSTALLATION GUIDE

HOOD

Read these instructions thoroughly before installing and operating the hood.

LSHD3689BD	LSHD3089BD
LSHD3680ST	LSHD3080ST
HCED3615S	HCED3015S
HCED3615D	HCED3015D

MFL70208702_04

www.lg.com

Copyright © 2017 - 2020 LG Electronics Inc. All Rights Reserved.

TABLE OF CONTENTS

3 BEFORE YOU BEGIN

4 IMPORTANT SAFETY INSTRUCTIONS

7 PRODUCT SPECIFICATIONS

7 General Specifications
8 Dimensions

9 PRODUCT OVERVIEW

9 Parts
9 Accessories

10 PLANNING THE INSTALLATION

10 Cabinet Layout
11 Ducting Options
12 Ducting Calculation Sheet
13 Power Supply
13 Verify the Package Contents

14 INSTALLATION INSTRUCTIONS

14 Mounting the Range Hood

15 WIRING DIAGRAM

BEFORE YOU BEGIN

IMPORTANT:

- Installer: In the interest of safety and to minimize problems, read these installation instructions completely and carefully before you begin the installation process. Leave these installation instructions with the customer.
- Customer: Keep these installation instructions for future reference and the local electrical inspector’s use.

APPLIANCE DATA PLATE

- The appliance data plate contains the model and serial number information and the electrical requirements.
- It is located inside the hood behind the filters on the back side of the chassis. Remove the filters to view it.

All specifications subject to change without notice. LG assumes no liability for changes to specifications.

IMPORTANT SAFETY INSTRUCTIONS

Read and follow all instructions when using the range to prevent the risk of fire, electric shock, personal injury, or damage. This guide does not cover all possible conditions that may occur. Always contact your service agent or manufacturer about problems that you do not understand.

Download this owner's manual at: http://www.lg.com

This is the safety alert symbol. This symbol alerts you to potential hazards that can result in property damage and/or serious bodily harm or death.
All safety messages will follow the safety alert symbol and either the word WARNING or CAUTION. These words mean:

WARNING -Indicates a hazardous situation which, if not avoided, could result in death or serious injury.

CAUTION - Indicates a hazardous situation which, if not avoided, could result in minor or moderate injury.

WARNING

- To avoid the possibility of explosion or fire, do not store or use combustible, flammable or explosive vapors and liquids (such as gasoline) inside or in the vicinity of this or any other appliance. Also keep items that could explode, such as aerosol cans away from cooktop burners, ovens and range hoods. Do not store flammable or explosive materials in adjacent cabinets or areas.
- If the information in this manual is not followed exactly, a fire or explosion may result causing property damage, personal injury or death.
- **Do not use an additional speed control device with this unit.**
- **To avoid motor bearing damage and noisy and/or unbalanced impellers, keep drywall spray, construction dust, etc. off power unit.**
- **Your ventilator motor has a thermal overload which will automatically shut off the motor if it becomes overheated. The motor will restart when it cools down. If the motor continues to shut off and restart, have the product serviced.**
- **TO REDUCE THE RISK OF FIRE, ELECTRIC SHOCK, OR INJURY TO PERSONS, OBSERVE THE FOLLOWING:**
  - Use this unit only in the manner intended by the manufacturer. If you have questions, contact the manufacturer.
  - Before servicing or cleaning unit, switch power off at service panel and lock the electrical panel door to prevent power from being switched on accidentally. When the electrical panel door cannot be locked, securely fasten a prominent warning device, such as a tag, to the service panel.

WARNING

- **TO REDUCE THE RISK OF FIRE, ELECTRIC SHOCK, OR INJURY TO PERSONS, OBSERVE THE FOLLOWING:**
  - Installation work and electrical wiring must be done by qualified person(s) in accordance with all applicable codes and standards, including fire-rated construction.
  - Sufficient air is needed for proper combustion and exhausting of gases through the flue(chimney) of fuel burning equipment to prevent back drafting. Follow the heating equipment manufacturer’s guidelines and safety standards such as those published by the National Fire Protection Association (NFPA), and the American Society for Heating, Refrigeration and Air Conditioning Engineers (ASHRAE), and the local code authorities.
  - When cutting or drilling into wall or ceiling, do not damage electrical wiring and other hidden utilities.
  - Ducted fans must always be vented to the outdoors.

CAUTION

For general ventilating use only. Do not use to exhaust hazardous or explosive materials and vapors.

GENERAL SAFETY PRECAUTIONS

To reduce the risk of fire, electric shock, serious injury or death when using the appliance, follow basic safety precautions, including the following:

WARNING

- Do not install or operate this hood if it has been damaged, dropped, has damaged electrical wires or is not working properly. If the product is damaged when received, immediately contact the dealer or builder.
- This range hood must be installed and grounded by a qualified installer according to these installation instructions.
- Install or locate this appliance only in accordance with these installation instructions and the requirements specified by the manufacturer of the cooktop or range. Improper installation, adjustment, alteration, service or maintenance can cause serious personal injury or property damage.
- The customer should not install, repair or replace any part of the range hood unless specifically recommended in the literature accompanying it. A qualified service technician should perform all other service.
- Keep all packaging materials away from children. Plastic bags can cause suffocation.
- Do not use an extension cord or adapter plug with this appliance.
- The installer must show the customer the location of the fuse box or circuit breaker panel box so that the customer knows where and how to turn the power off.
- Before installing or servicing the range hood, switch power off at the fuse box circuit breaker and lock the electrical panel door to prevent power from being switched on accidentally. When the electrical panel cannot be locked, securely fasten a prominent warning device, such as a tag, to the electrical panel.
- Read the owner's manual completely before using the appliance. Clean the appliance only as instructed in the owner's manual. Use only the cleaners specified.
- Do not tamper with the controls.

⚠ WARNING

- Never allow the filter(s) to become blocked or clogged. Do not allow foreign objects, such as cigarettes or napkins, to be sucked into the hood.
- Clean the filter(s) and all grease-laden surfaces often to prevent grease fires and maintain performance.
- If the cooktop and range hood are near a window, use an appropriate window treatment. Avoid long drapes or other window coverings that could blow over the cooktop and hood, resulting in a fire hazard.
- Always run the fan(s) whenever the cooktop is operating.
- Never leave the range or cooktop unattended when a burner (or element) is in use. Boil-overs and greasy spills may smoke and/or ignite.
- Do not leave children alone or unattended in the area where the cooktop and range hood are in use. Never allow children to sit or stand on an appliance. Do not let children play with a range, cooktop or range hood. Do not store items of interest to children above or around the cooktop, range or range hood.
- The minimum vertical distance between the cooktop surface and the exterior part of the hood must be no less than 26" (66 cm). The vertical distance required may be longer for the range or cooktop being used. Consult the range or cooktop installation instructions for the minimum and maximum vertical distance from the appliance being used.
- TO REDUCE THE RISK OF FIRE, USE ONLY METAL DUCT WORK.

READ AND SAVE THESE INSTRUCTIONS

PRODUCT SPECIFICATIONS

General Specifications

All Models

Fan Speeds	5
Filters	Aluminum mesh filters
Total Connect Load	120 VAC, 60 Hz, 4 Amp.
Lights	120 VAC, 8 W LED light strip

Model Specific

Model Number	LSHD3689BD, LSHD3680ST, HCED3615S ,HCED3615D, LSHD3089BD, LSHD3080ST, HCED3015S, HCED3015D
Filters	2

Weight Specifications

Model Number	Weight
LSHD3689BD, LSHD3680ST, HCED3615S, HCED3615D	37 lb. (17 kg)
LSHD3089BD, LSHD3080ST, HCED3015S, HCED3015D	35 lb. (16 kg)

Dimensions

Tolerances: +1/16", -0 (1.6 mm, -0), unless otherwise stated.

NOTE

The exhaust duct(s) and electrical wiring can be connected from either the top or the back of the hood.

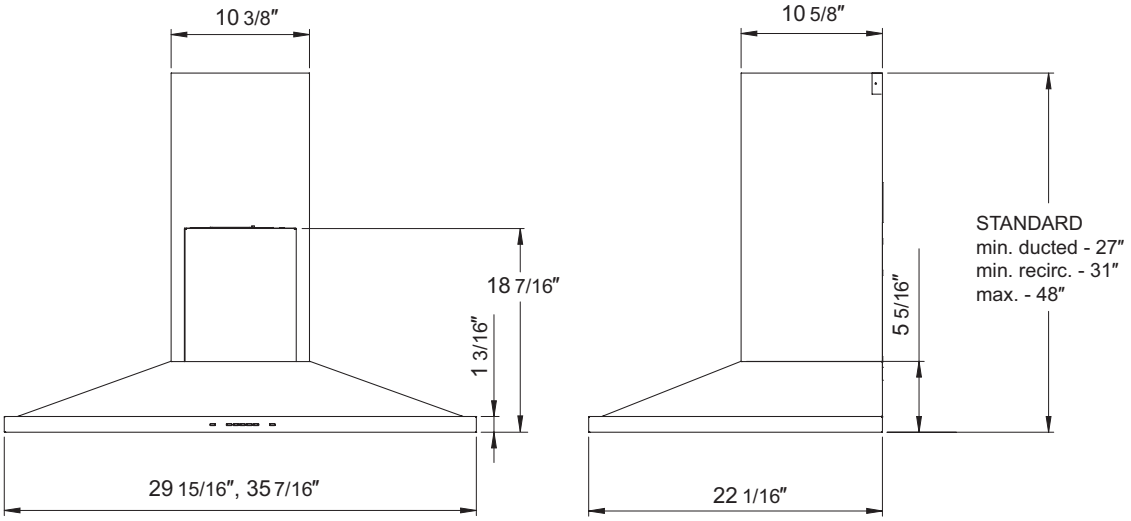

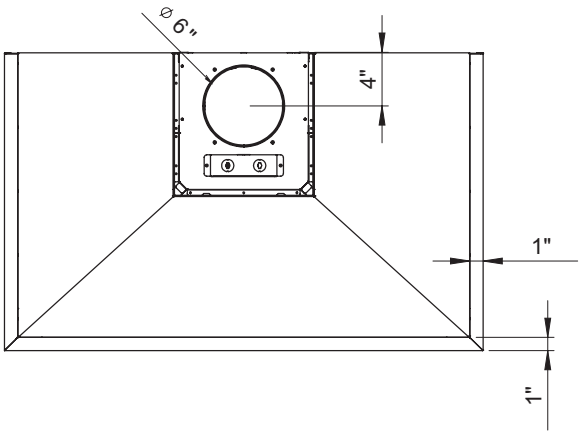

Overall Dimensions

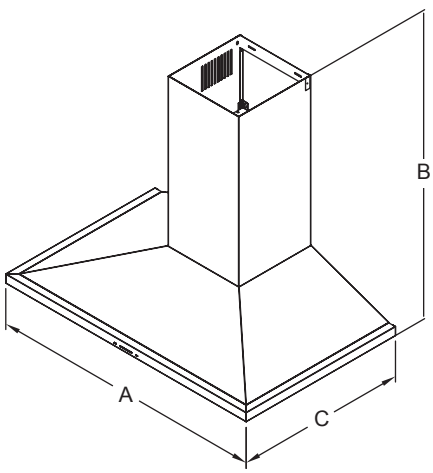

Model	A	B	C
LSHD3689BD, LSHD3680ST, HCED3615S, HCED3615D	36"	26 15/16"	22 1/16"
LSHD3089BD, LSHD3080ST, HCED3015S, HCED3015D	30"	26 15/16"	22 1/16"

PRODUCT OVERVIEW

Parts

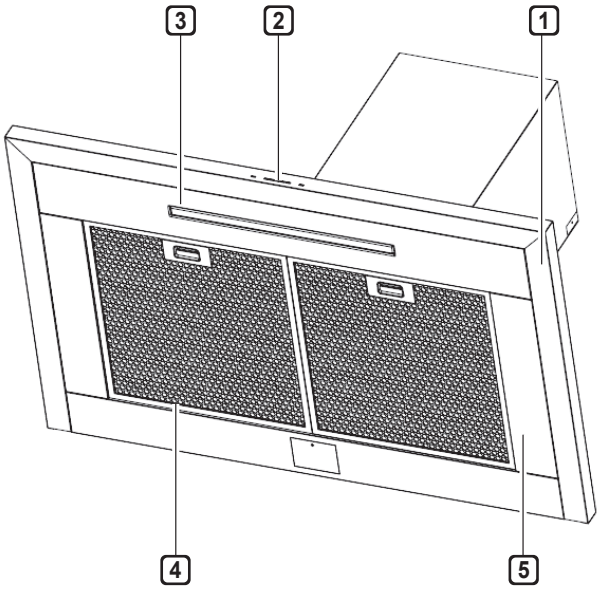

1 **Hood**

2 **Icon Touch Control Panel**

3 **LED Strip Light**

4 **Mesh Filter**

5 **Side Panel**
(Only for LSHD3689BD, LSHD3680ST, HCED3615S, HCED3615D)

Accessories

Included Accessories

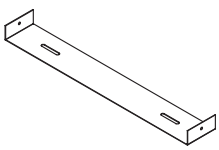

Duct cover bracket

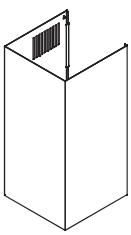

Duct cover (Upper)

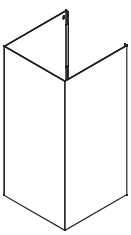

Duct cover (Lower)

Manual

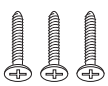

M6 x 1" (3)

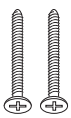

M6 x 1-1/2" (2)

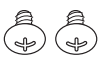

M4 x 8 (2)

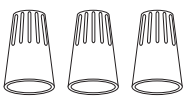

Wire Caps (3)

PLANNING THE INSTALLATION

WARNING

Observe all governing codes and ordinances during planning and installation. Contact your local building department for further information. Use only duct work deemed acceptable by state, municipal and local codes.

Cabinet Layout

WARNING

To reduce the risk of personal injury caused by reaching over a hot appliance, cabinet storage space located directly above the range should be avoided.

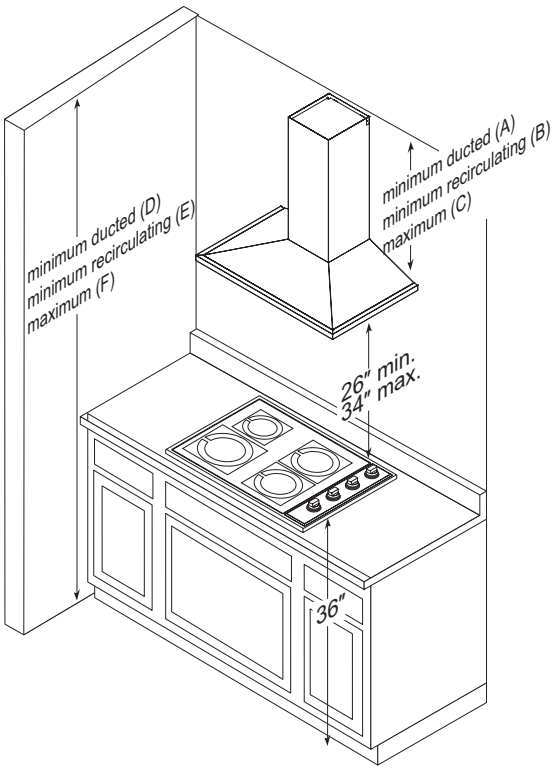

Minimum Cabinet Width

		Standard Duct Cover
Hood Heights	minimum ducted (A)	27"
	minimum recirculating (B)	31"
	maximum (C)	48-1/2"
Ceiling Heights	minimum ducted (D)	89" (7' 5")
	minimum recirculating (E)	93" (7' 9")
	maximum (F)	118" (9' 10")

Ducting

A minimum of 6″ round duct must be used to maintain maximum air flow efficiency.

Always use rigid metal ducts only. Flexible ducts could restrict air flow by up to 50%.

Also use calculation (on page 12) to compute total available duct run when using elbows, transitions and caps.

ALWAYS, when possible, reduce the number of transitions and turns. If long duct run is required, increase duct size from 6″ to 7″ or 8″.

If turns or transitions are required, install as far away from hood duct output and as far apart as possible.

Minimum mount height between range top to hood bottom should be no less than 26″.

Maximum mount height should be no higher than 34″.

It is important to install the hood at the proper mounting height. Mounting the hood too low could result in heat damage and fire hazard. Mounting the hood too high will make it hard to reach and reduce its performance and efficiency.

If available, also refer to the range manufacturer's height clearance requirements and recommended hood mounting height above range.

CAUTION

DAMAGE DURING SHIPPING / INSTALLATION:

- Please fully inspect unit for damage before installation.
- If the unit is damaged in shipment, return the unit to the store in which it was bought for repair or replacement.
- If the unit is damaged by the customer, repair or replacement is the responsibility of the customer.
- If the unit is damaged by the installer (if other than the customer), repair or replacement must be made by arrangement between customer and installer.

Ducting Options

WARNING

Fire Hazard

- NEVER exhaust air or terminate duct work into spaces between walls, crawl spaces, ceiling, attics or garages.
- All exhaust must be ducted to the outside.
- Use metal ductwork only.
- Fasten all connections with sheet metal screws and tape all joints with certified Silver Tape or Duct Tape.

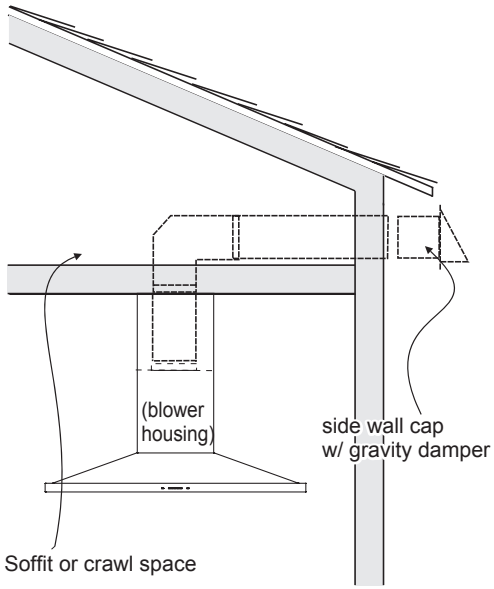

Sample Ducting Options

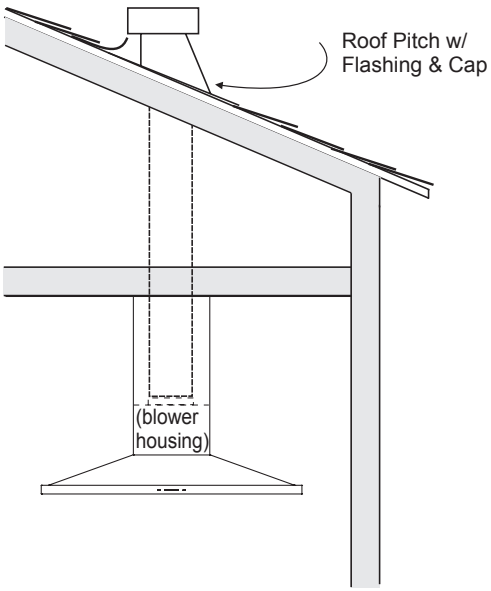

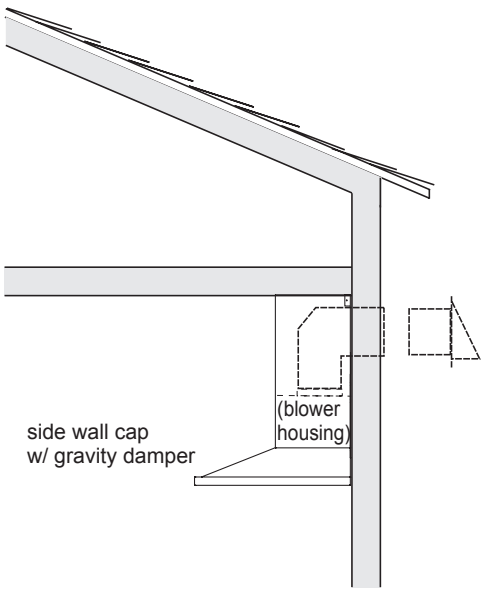

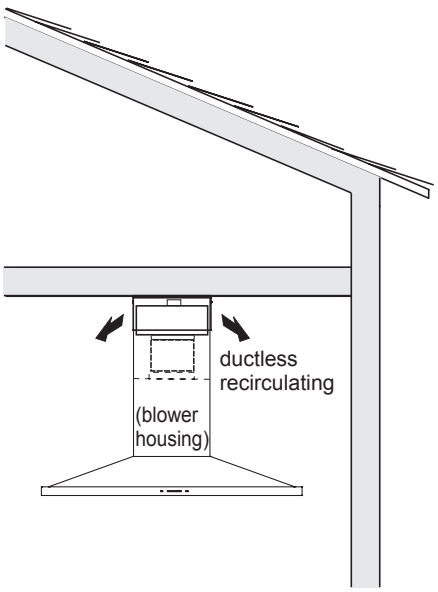

Ducting Calculation Sheet

Duct pieces		Equivalent length x number used =	Total
	3-1/4" x 10" Rect., straight	1 Ft. x ( ) =	Ft.
	6" Round, straight	1 Ft. x ( ) =	Ft.
	7"-10" Round, straight	1 Ft. x ( ) =	Ft.
	3-1/4" x 10" Rect.90˚ elbow	15 Ft. x ( ) =	Ft.
	3-1/4" x 10" Rect.45˚ elbow	9 Ft. x ( ) =	Ft.
	3-1/4" x 10" Rect.90˚ flat elbow	24 Ft. x ( ) =	Ft.
	3-1/4" x 10" Rect. wall cap with damper	30 Ft. x ( ) =	Ft.
	3-1/4" x 10" Rect.to 6" round transition	5 Ft. x ( ) =	Ft.
	3-1/4" x 10" Rect.to 6" round transition 90˚ elbow	20 Ft. x ( ) =	Ft.
	6" Round, 90˚ elbow	15 Ft. x ( ) =	Ft.
	6" Round, 45˚ elbow	9 Ft. x ( ) =	Ft.
		Subtotal column 1 =	Ft.

Duct pieces		Equivalent length x number used =	Total
	6" Round wall cap with damper	30 Ft. x ( ) =	Ft.
	6" Round, roof cap	30 Ft. x ( ) =	Ft.
	6" round to 3-1/4" x 10" rect. transition	1 Ft. x ( ) =	Ft.
	6" round to 3-1/4" x 10" rect. transition 90˚ elbow	16 Ft. x ( ) =	Ft.
	7" - 10" Round, 90˚ elbow	15 Ft. x ( ) =	Ft.
	7" - 10" Round, 45˚ elbow	9 Ft. x ( ) =	Ft.
	7" - 10" Round wall cap with damper	30 Ft. x ( ) =	Ft.
	7" - 10" Round, roof cap	30 Ft. x ( ) =	Ft.
	7" round to 3-1/4" x 10" rect. transition	8 Ft. x ( ) =	Ft.
	7" round to 3-1/4" x 10" rect. transition 90˚ elbow	23 Ft. x ( ) =	Ft.
		Subtotal column 2 =	Ft.
		Subtotal column 1 =	Ft.
		Total ductwork =	Ft.

Maximum Duct Length: For satisfactory air movement, the total duct length should not exceed 100 equivalent feet.

Ductwork Design Tips

Wherever possible, reduce the number of transitions and turns to as few sharp angles as possible. Two staggered 45° angles are better than one 90°.

Keep turns as far away from the hood exhaust as possible, and allow as much space between bends as possible.

For best performance, use round ducts instead of rectangular, especially when elbows are required.

If multiple elbows are used, try to keep a minimum of 24" of straight duct between them.

Avoid “S” or “back to back” use of adjacent elbows.

In regions where the weather gets extremely cold, use thermal breaks, such as a short section of non-metallic duct, to avoid indoor heat loss. Locate the break as close as possible to the outside pass-through point.

Do not use flexible metal duct.

Do not use ductwork that is smaller in cross-sectional area than the recommended types above.

Power Supply

WARNING

- The information in this manual should be followed exactly. Failure to do so could result in fire or electrical shock, causing property damage, personal injury or death.
- **All electrical work must by performed by qualified electrician or person with similar technical knowledge and background.**
- For personal safety, remove house fuse or open circuit breaker before beginning installation. Do not use extension cord or adapter plug with this appliance.
- **Follow national electrical codes or prevailing local codes and ordinances.**

Electrical Supply

This appliance requires a 120V 60Hz electrical supply, and must be connected to an individual, properly grounded branch circuit, protected by a 15 or 20 ampere circuit breaker or time delay fuse. Wiring must be 2 wire w/ ground. Please also refer to the Electrical Diagram label on product.

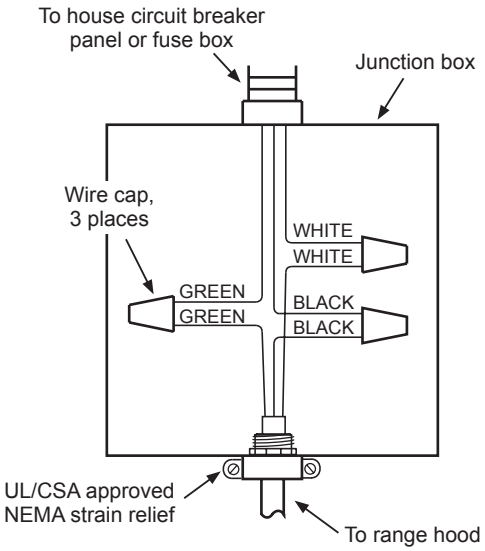

3 Wire Connection to Junction Box

Cable Lock

A cable locking connector (not supplied) might also be required by local codes. Check with local requirements and codes, and purchase and install appropriate connector if necessary.

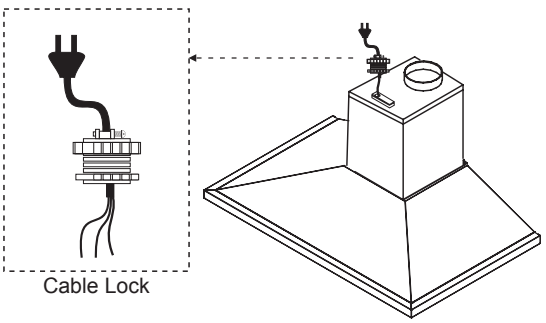

Verify the Package Contents

Unpack the parts box and verify that all parts and accessories have been included. If any item is missing or damaged, please contact the dealer immediately. Do not install a damaged or incomplete appliance.

Make sure you have everything necessary for proper installation before proceeding.

INSTALLATION INSTRUCTIONS

WARNING

- Do not install the range hood unless the electrical service provided meets the range hood specifications.
- Observe all governing codes and ordinances during installation. Contact your local building department for further information.
- A qualified technician must complete the installation of this built-in appliance. More than one person is required to raise the hood into place. The owner is responsible to make sure the hood is properly installed.

Mounting the Range Hood

Mounting Under a Kitchen Cabinet

CAUTION

At least two installers are required due to the weight and size of the hood.

1. Measure from range top to desired hood bottom and mark line A. (26" minimum from range top).
2. Plumb and mark center line.
3. Mark hood height line B. (18-7/16" from line A)
4. Mark mounting spread from center line. (8-7/8" on line B)
5. Fasten (2) M4 x 1-1/2" screws into studs on line B but do not tighten all the way.

NOTE

Wood blocking may need to be added behind the drywall if no studs are present. Wall anchors may also be used but check local codes for compliance. Failure to use suitable wall anchors and screws to hold the weight of the hood could result in personal injury or damage to cooking surface or counter.

6. Remove the (2) aluminum mesh filters.
7. Hang hood onto the mounting screws and hand tighten each screw. (Fig A1) Secure a third M4 x 1-1/2" screw through inside of hood into wall for extra support (Fig A2)
8. Center and attach duct cover mounting bracket to wall just below the ceiling or soffit using (2) M4 x 1" screws.
9. Install electrical and duct work. Seal duct work with aluminum duct tape
10. Power up hood and check for leaks around duct tape.
11. Place telescopic duct covers onto hood and extend inner (top) duct cover upwards and secure to duct cover bracket using (2) M4 x 8 screws. Reinstall mesh filters.

- If using hood in recirculating mode you must secure the air diverter plate onto wall before installing duct work and duct covers. You will also need to install charcoal filters and brackets.

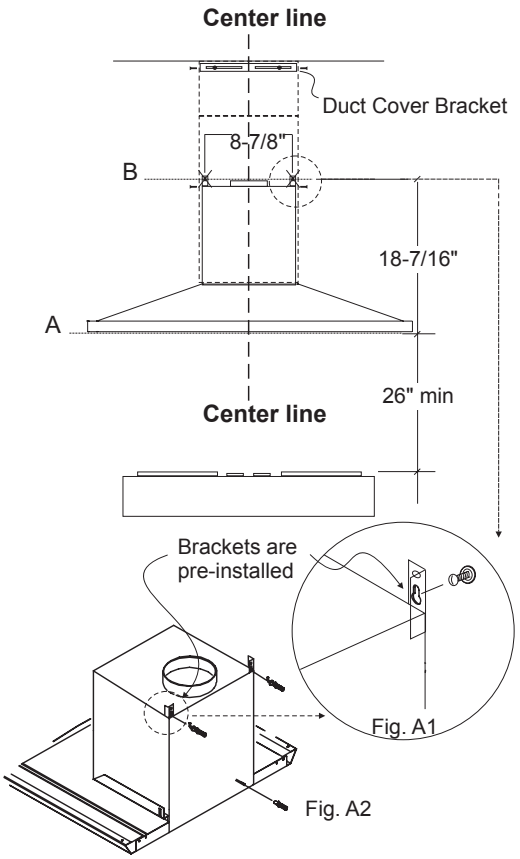

WIRING DIAGRAM

Models	Volts	HZ	MAX Amps
LSHD3089BD LSHD3080ST HCED3015S HCED3015D LSHD3689BD LSHD3680ST HCED3615S HCED3615D	120	60	4

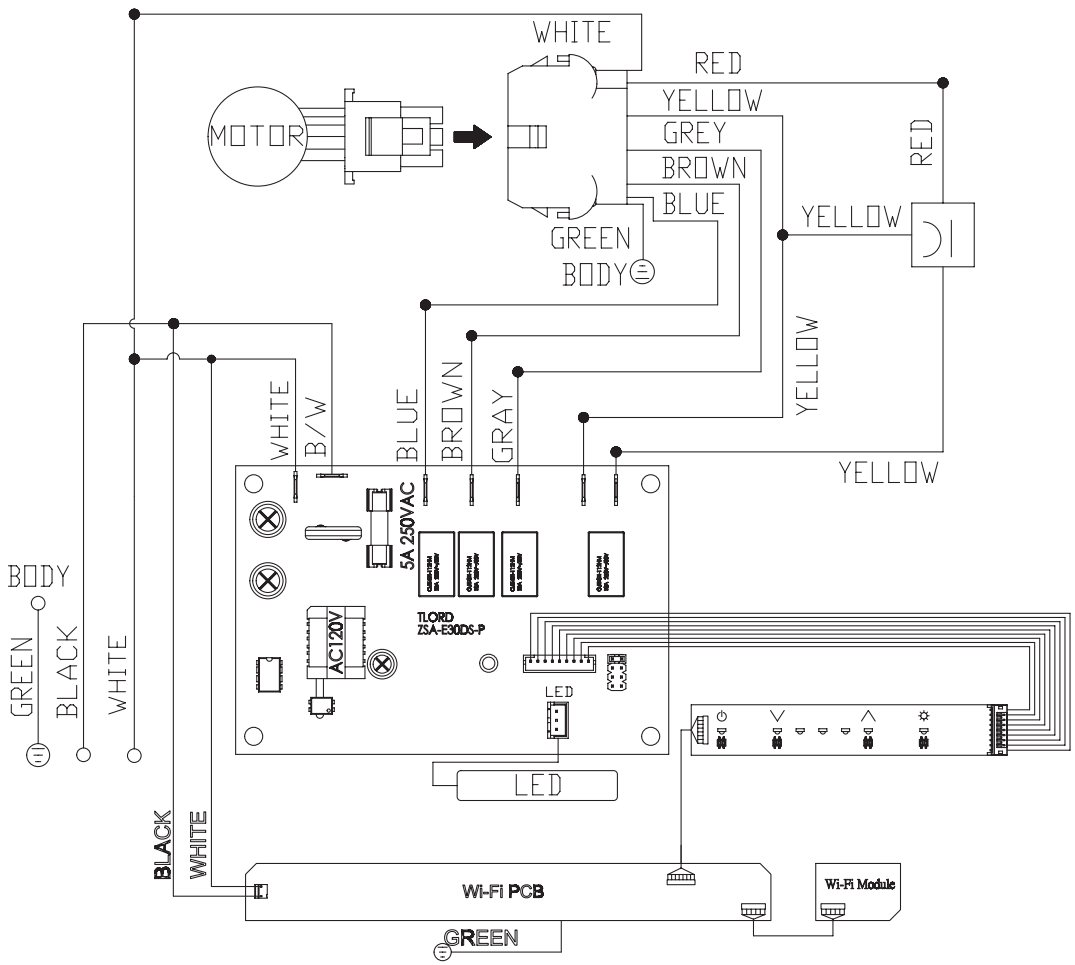

REMARKS:CONDENSER 12.5+12.5uF 250VAC FIT AC120V 60Hz

LG
Life's Good

LG Customer Information Center	
1-800-243-0000	USA
1-888-542-2623	CANADA
Register your product Online!	
www.lg.com	

Centre d'informations aux consommateurs LG	
1-800-243-0000	États-Unis
1-888-542-2623	CANADA
Enregistrez votre produit en ligne!	
www.lg.com	