MASSAGE CHAIR
USER MANUAL

PS3100

PLEASE READ AND SAVE THESE INSTRUCTIONS

RealRelax Inc.
WWW.REALRELAXMASSAGE.COM
USA:(800) 513-5727

TABLE OF CONTENTS

- Thank for your purchase of this product. Before using, please read this USER MANUAL carefully,and pay special attention to the safety precaution to ensure proper operation and use.
- Please keep this USER MANUAL properly for further reference.

SAFETY PRECAUTIONS

MEDICAL WARNINGS ---------- 01 - 02
WARNING ---------- 03
FORBIDDEN---------- 03 - 04
REMOVE PLUG ---------- 04

NAME AND FUNCTION OF EACH COMPONENT

EXTERNAL STRUCTURE ---------- 05
INTERNAL STRUCTURE ---------- 06
REMOTE CONTROLLER INSTRUCTION ---------- 07
REMOTE CONTROLLER KEY FUNCTIONS ---------- 08
HOT KEY INSTRUCTION ---------- 09
MUSIC SYSTEM ---------- 10

PREPARATION BEFORE USING

INSTALLATION METHOD ---------- 12
TURN ON POWER SUPPLY ---------- 13
MOVE METHOD ---------- 13

PRODUCE STORAGE AND MAINTENANCE

INSTALLATION POSITION ---------- 14
GROUNDING INSTRUCTIONS ---------- 15
AFTER USING THE CHAIR ---------- 15
METHODS OF STORAGE ---------- 15
MAINTENANCE ---------- 15

TROUBLESHOOTING GUIDE

KIND REMINDING ---------- 16
TROUBLESHOOTING GUIDE ---------- 16

CLEANING INSTRUCTIONS

CLEANING THE PLASTIC PARTS ---------- 17
CLEANING THE MASSAGECHAIR SYNTHETIC LEATHER ---------- 18
ENVIRONMENT WHEN USING PRODUCT ---------- 19

TECHNICAL SPECIFICATIONS

TECHNICAL SPECIFICATIONS ---------- 20

SAFETY PRECAUTIONS

- Before using, please read this "SAFETY PRECAUTIONS" carefully to ensure proper operation.
- The following "SAFETY PRECAUTIONS" is of great help to your correctly use of this massage chair.
- To clearly indicate the degrees of danger and damage, the classes of accidents caused by incorrect. use are classified into "WARNING" and "FORBIDDEN". Instructions marked as followings should be strictly followed.

MEDICAL WARNINGS

NOT RECOMMENDED FOR THE FOLLOWING PEOPLE.

- Patients with serious hyperostosis
- Swollen lump and patient thrombosis
- Patients with serious heart conditions
- Pregnant Women
- People that consume large amounts of alcohol
- People with diabetes
- People suffering from high fever
- Patients with malignant tumors or malignant abscesses
- People with distorted joints
- People with serious skin conditions
- People with spinal injuries
- All people should consult a physian and exercise care when operating this system
- Minors under 16 years or people unable to control his/her behavior,i.e.mental patients,people with paralysis,etc.

WARNINGS

- Use this appliance only for its intended use as described in this manual.
  Do not use attachments not recommended by the manufacturer.
- Never operate this appliance if it has a damaged cord or plug.
- Keep the cord away from heated surfaces.
- Please empty pockets and remove all your arm Jewellery and watch before using this chair
- Do not operate where aerosol (spray) products are being used.
- To disconnect, turn all controls to the off position, then remove plug from outlet.
- Connect this appliance to a properly grounded outlet only. See Grounding Instructions.
- Do not remove the back cushion and do not play with roller mechanism.
- Do not remove the bottom seat and do not play with actuators.
- Keep the cord out of heavy traffic area.
- Always unplug the power cord from the electrical outlet 0immediately after use.
- Only people less than 120kgs are acceptable.
- Do not operate any equipment with damaged parts.
- Any other use not recommended by the manufacturer may cause electrical shock or injury.
- Do not touch or re-wire the wires connected to the master-box.
- Do not attempt to repair or adjust any electrical or mechanical functions on this unit.
  Doing so will void the warranty.
- Do not put your hands or head under the chair
- When using the massage chair, ascertain that the footrest is in the lowest position.

FORBIDDEN

- Do not allow children to play near the chair especially during operation
- Do not leave mobility impaired or speech impaired people alone in chair
- Do not place or stock this machine near damp places such as swimming pools or bathrooms
- Do not press by force on the massage rollers
- Do not stand on the chair or store heavy items on the chair
- Do not use in the environment which is dusty, greasy or lacking oxygen

- Do not place near steam oven, open fire, or heat
- Wear suitable clothing, do not massage with bare skin
- Do not place directly in the sun
- Do not use electric blanket while using the massage chair
- Do not use outdoors
- Do not use while smoking
- Do no use immediately after meals
- Do not sit on the back cushions, armrest, or legs
- Don't use the massage chair when your body is wet or moist as it can result in electrical shock
- Do not operate with more than one person
- Don't use when using head ornamentation as it can result in injury
- Do not stumble over electrical wires or connections

REMOVE PLUG

- Before maintenance, please pull out power plug. In addition,please do not insert or unplug the power plug with damp hands, to avoid electric shock.
- When the massage chair is not in use, please switch off power and remove the plug from socket. When power is off, please cut off power supply immediately and pull out the power plug from socket.

BE CAREFUL

- Please avoid using a massager after drinking or when you are not feeling well.
- Do not massage the head, elbow joints, knees, chest, abdomen, etc. directly on the massage ball.
- Do not damage the power cord or operate the massager while the power cord is damaged. This may result in electric shock or mechanical failure. Please contact the service center for a detailed inspection.

NAME AND FUNCTION OF EACH COMPONENT

EXTERNAL STRUCTURE

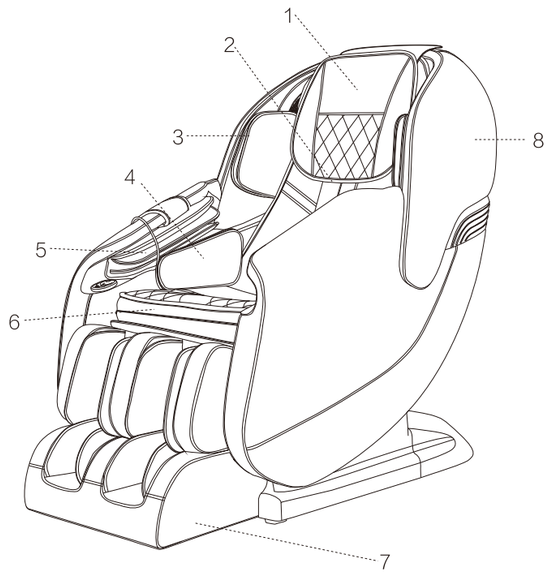

1.Pillow
2.Backpad
3.Shoulder Air Massage Unit
4.Thigh airbag
5.Armrest
6.Seat
7.Footrest
8.Backrest

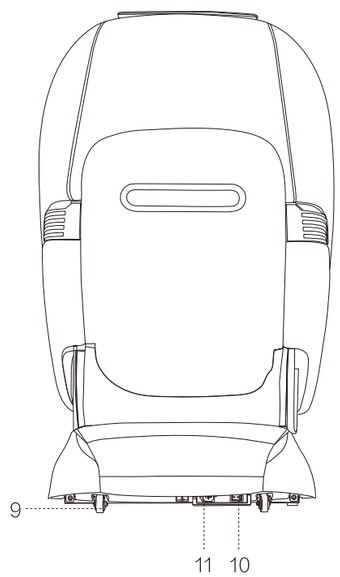

9.Wheels
10.Power Switch
11.Cord Connector

INTERNAL STRUCTURE

1 Shoulder Air Massage Unit
2 Armrest Air Massage Unit
3 Thigh Airbag Massage Unit
4 Hot Key Unit
5 Calf Air Massage Unit
6 Foot Air Massage Unit
7 SL Massage Track
8 Back Heat
9 Slide Rail
10 Foot Roller Massage Unit

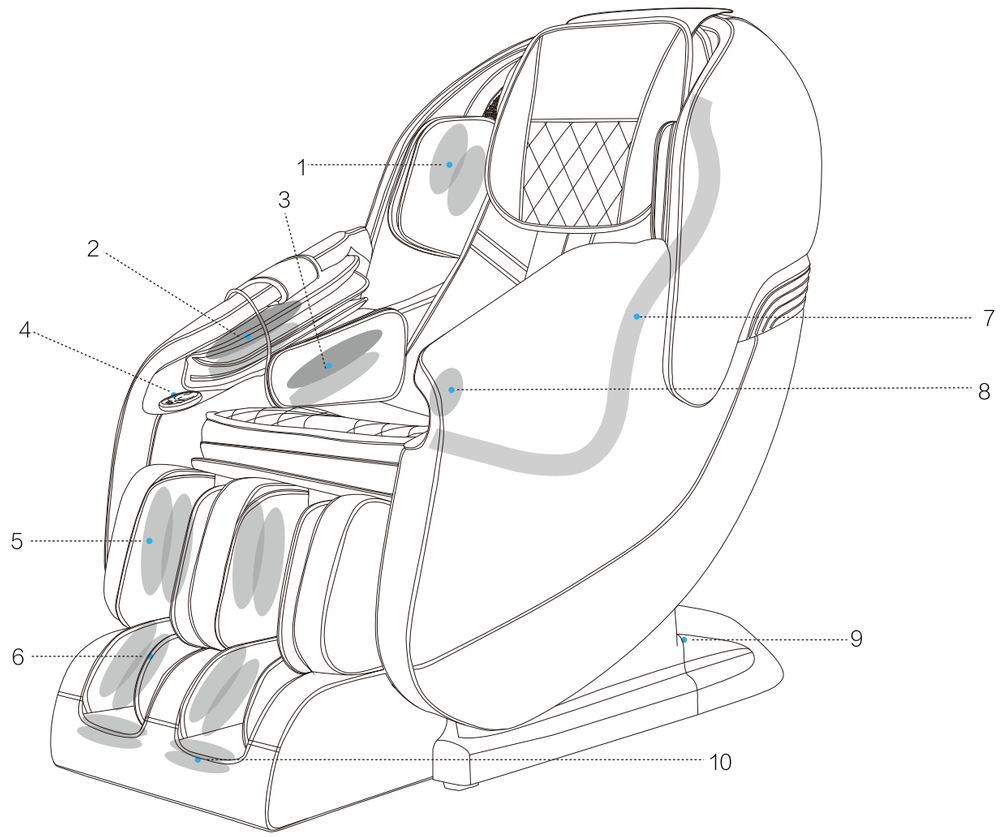

REMOTE CONTROLLER INSTRUCTION

1 LCD screen
2 Hammering
3 Kneading
4 Swedish
5 Back movement strength
6 Rolling
7 Interval massage
8 Back up
9 Adjust massage speed
10 Back down
11 Timer & Heating
12 Man
13 Neck & Shoudlers
14 Relax
15 On/Off button
16 Timer
17 Tapping
18 Airbag
19 Interval massage
20 Fix point massage
21 Airbags intensity
22 Heat
23 Shiatsu
24 Manual
25 Adjust airbag intensity
26 Airbag
27 Ladies
28 Waist
29 Sleep
30 Zero gravity recline

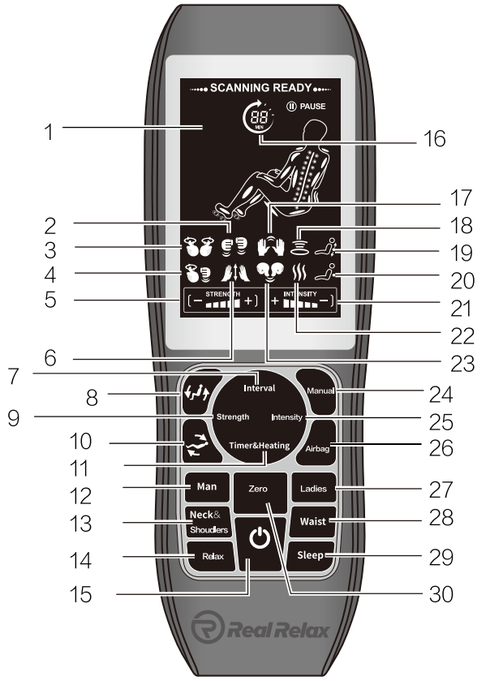

REMOTE CONTROLLER KEY FUNCTIONS

Button	Function	Button	Function
	Press this button to turn the massage chair on and off	Zero	Press this key to enter zero gravity mode
	Press this button to adjust the product upward	Strength+/-	Adjust massage speed of mechanical hands
	Press this button to adjust the product downward	Intensity+/-	Adjust airbag intensity
Manual	Choose different massage techniques	Interval	Adjusting the mechanical hands range and fixed point massage
Airbag	Control the airbag work of various parts	Timer&Heating	Short press to adjust the time mode of five speed rate, long press to open the waist heating mode

Auto Mode:

Button	Function	Button	Function
Man	Turns on men's massage mode. This massage mode features a full-body massage with four levels of intensity and a homogeneous massage rhythm.	Ladies	Turns on women's massage mode. This massage mode features a full-body massage with two levels of intensity with a homogeneous massage rhythm.
Neck& Shoudlers	Turns on neck and shoulder massage mode. This massage mode features a full-body massage that focuses on the neck. There are three levels of intensity with homogeneous massage rhythm.	Waist	Turns on waist care massage mode. The massage mode features a full-body massage that focuses on the waist. the massage modes has three levels of intensity with a homogeneous massage rhythm.
Relax	Press this button to enter the relaxation mode	Sleep	Turns on sleep mode. This massage mode features a full-body massage with an intensity cycle that starts at level 3 and decrease until reaching level 1. During the 15 minute massage mode each intensity level gradually shifts every 5 minutes.After 15 minutes the chair won't be in the original position at zero gravity.

Manual Mode:

Manual massage of neck / back / waist area:
Turn on, select your prefered massage method from the icons of the touch screen remote. Holding down the up arrow and down arrow buttons on the remote, adjust the massage heads to the neck / back / waist position.
Release the button once the massage heads have move to desired position.

HOT KEY COMPONENT

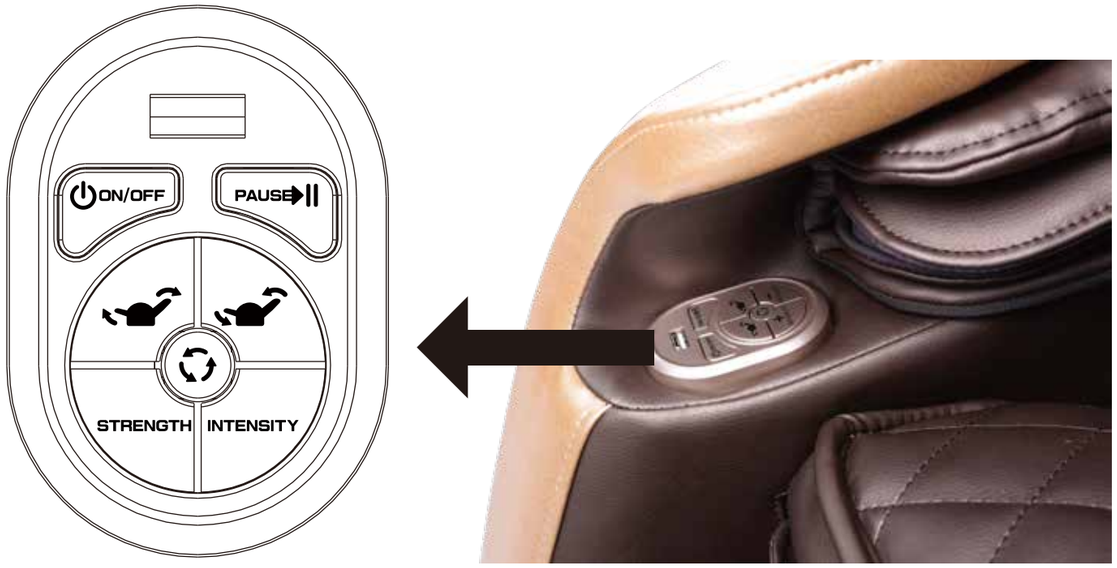

Button	Function
	USB port for charging
ON/OFF	ON/OFF
PAUSE	Pause/Continue
	Lower the backrest ,raise the legrest
	Raise the backrest, lower the legrest.
	Automatic programs switch
STRENGTH	Adjust massage speed
INTENSITY	Adjust airbag intensity

MUSIC SYSTEM

Our product is designed with Bluetooth audio connection function.It can play music through connect with smart phone,tablet computer or other audio devices.

How to use:

1. Open mobile-phone/ipad/computer BLUETOOTH capabilities,and access to the search state, your device will automatically search neighboring BLUETOOTH devices.
2. In a few seconds,our massage chair name will show up under the device list,select massage chair name,and the connection complete.

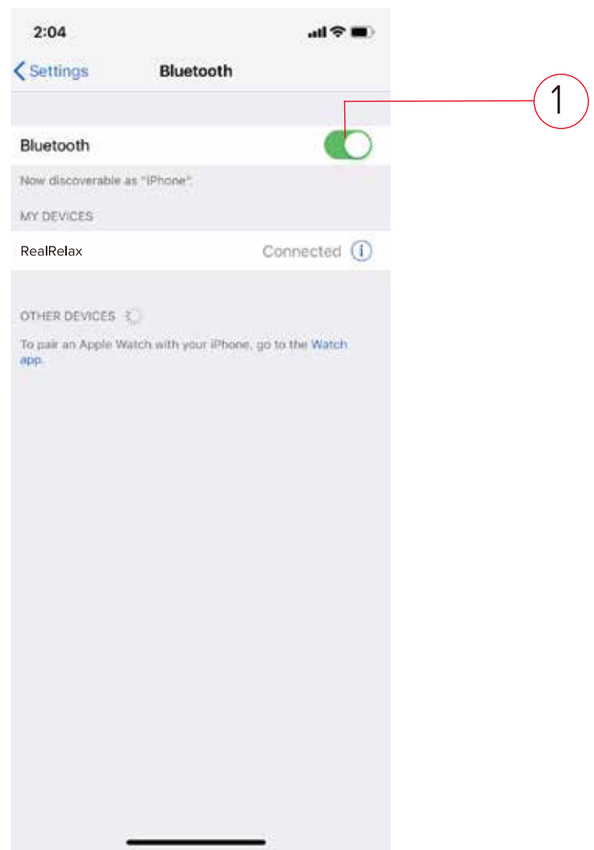

PREPARATION BEFORE USING

1 INSTALLATION METHOD

ACCESSORIES FROM BOX

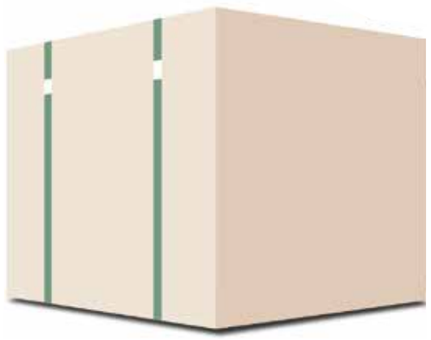

Our chair is shipped in one box.

Lay down the footrest

Setps:

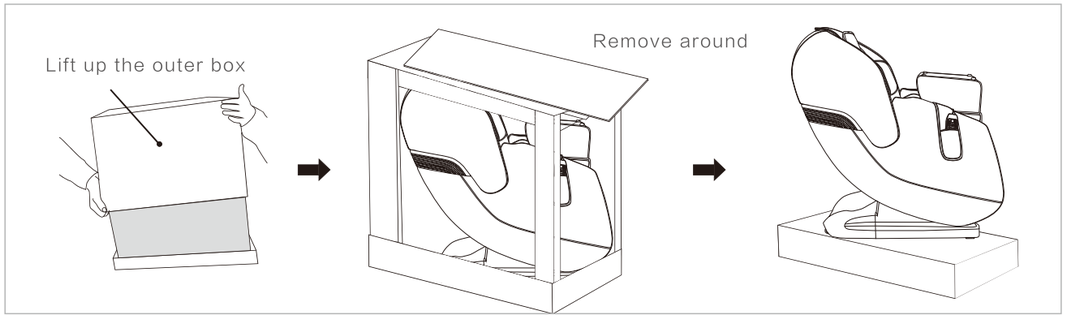

2 TURN ON POWER SUPPLY

1.Plug the power cord into three core socket with well grounding.
2.Turn on the power switch on the bottom of massage chair.

CAUTION
- Before switching on the chair, please make sure there is no damage on the power wire and other exposed wires.
- Make sure the power switch is off before the chair is connected to electricity.

3 MOVE METHOD

- There are moving rollers at the bottom of the chair.
- Raise the back to the highest point.
- Switch off and plug out the chair.
- Lift the front part of the chair as showed in the figure(one person raise the front part via holding moving holder, another person push the chair when holding the top of the chair), move the chair by the rollers.

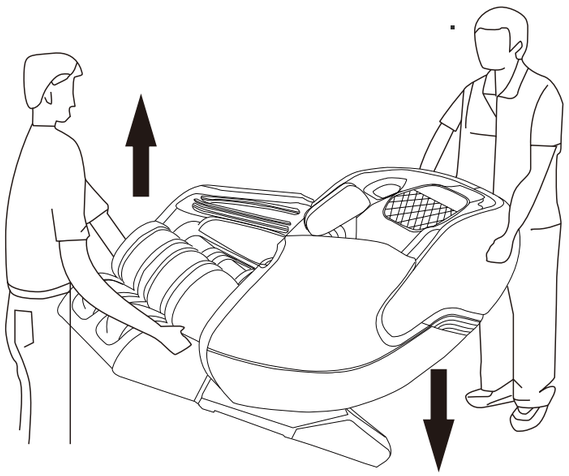

CAUTION
- Don't move it when there is people in it.
- Don't use the armrest while moving the chair, only hold the moving holder in the back and front.

INSTALLATION POSITION

PLEASE LEAVE THE SPACE AROUND THE MASSAGE CHAIR WHEN PREPARING THE MASSAGE.

(1) Place a massage chair in a place where there is enough space for the back of the chair to recline and the stand to rise.
(2) Make sure that there is at least 30 cm in the back of the massage chair and at least 30 cm in front of the massage chair.In order to prevent from signal interference, please keep at least 1m away from the TV, radio and other video and audio devices.

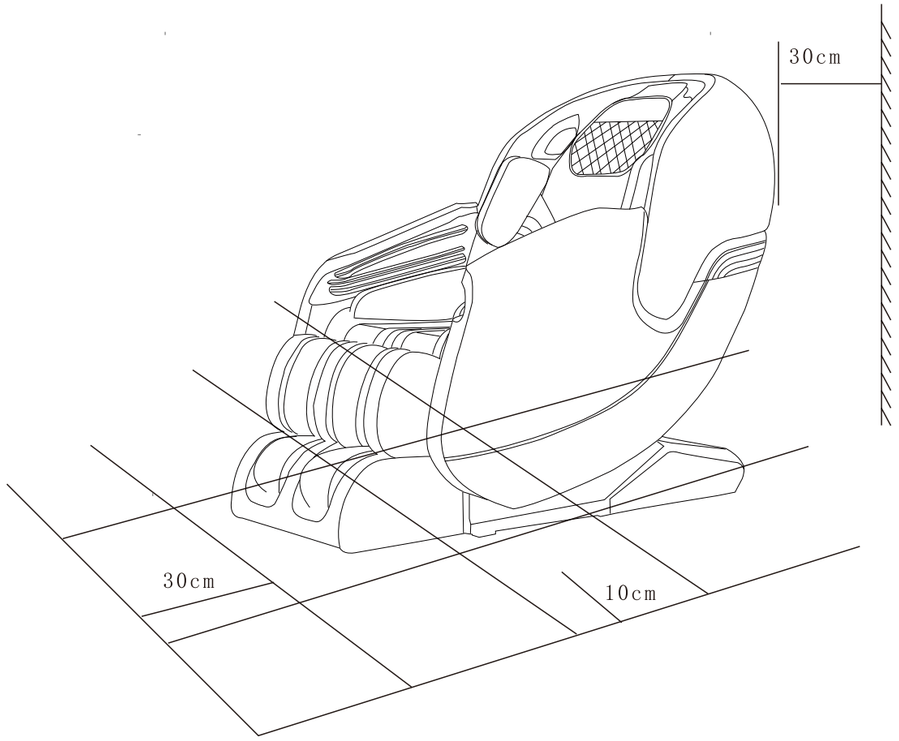

CAUTION
Before using, please tidy up well the cables to avoid twining or damage When the whole chair makes slide movement forward or backward to original position, please check first whether there are kids,pets or any other objects to avoid accidents.Please put carpet or other pad under the massage chair,in order to avoid any unpredictable impression on the floor.

SURROUNDING ENVIRONMENT

	Keep the massage chair away from damp places (for example: bathroom) to avoid electric leakage
	Keep the massage chair away from high temperatures sources (for example: stove) to avoid fire or damage to leather material

GROUNDING INSTRUCTIONS

This product must be grounded. If it should malfunction or breakdown, grounding provides a path of least resistance for electric current to reduce the risk of electric shock. This product is equipped with a cord having an equipment-grounding conductor and a grounding plug. The plug must be plugged into an appropriate outlet that is properly installed and grounded in accordance with all local codes and ordinances.
DANGER - Improper connection of the equipment-grounding conductor can result in a risk of electric shock. Check with a qualified electrician or serviceman if you are in doubt as to whether the product is properly grounded. Do not modify the plug provided with the product - if it will not fit the outlet; have a proper outlet installed by a qualified electrician.

AFTER USING THE CHAIR

- Please power off the chair and unplug power cable from power the supply socket after using disconnect the controller and store carefully
- Please power off the chair and unplug the chair from the power supply socket when the chair is not in use, to avoid children to start the chair accidentally
- Please store well the chair if it is not in use for a long time.

METHODS OF STORAGE

- Do not dismount the back of the chair
- Keep the massage chair free of dust
- Cover the chair with dust-free cloth to prevent dust from collecting
- Do no store in a hot, humid, damp place or in direct sunlight or heat
- Do not store in an overly cold place

MAINTENANCE

- Before cleaning unplug from electrical source to avoid shock
- Clean the cloth surface with neutral detergent or special mild detergent for cloth
- Dust can be cleaned off with a damp cloth of mild detergent and air dry
- Do not spray pesticide on device
- Specified cleaner can be used on the leather, plastic, and dried with a cloth
- Do not use a damp cloth on the electronic components which can cause shock and damage
- The leather covers (headrest, seat cushion, foot cushion) can be removed for cleaning

KIND REMINDING

During daily use, please check whether the following phenomenon exist: Scorched smell
When touch the wire, the power is on, but sometimes off
The power supply cord is hot
Other abnormal phenomenon

CAUTION If problems happen above, please turn off power supply and contact the distributor or manufacturer for assistance.

TROUBLESHOOTING GUIDE

Problems/Issues	Possible Cause	Trouble Shooting Method
Sounds like tapping or hum sounds	Sounds from air pump, motor or other mechanical parts	Normal phenomenon
Suddenly stops working	1. Bad power connection 2. Auto program timers is up	1. Unplug and reinsert power cord to he chair 2. Normal
Does not work after power up	1. Power switch is not turned on 2. Bad connection between plug and socket 3. Massage remote is not turned on 4. Have broken power wire plug 5. Bad fuse 6. Control unit for functioning properly	1. Turn power switch on 2. Connection power cord again 3. Press power button on remote 4. Contact professional technician 5. Replace fuse 6. Contact professional technician
Roller height changes	Rollers work alternately	Normal phenomenon
Abnormal sounds suddenly while working	Maybe from over working the massage chair	1.Cut down usage 2. Contact professional technician
Can not recline the chair	Obstruction-be sure that the chair is allowed enough room to fully recline	Stop chair opearion, and move obstruction
can not restore position after reclined	Problem on electric motion pole or plug under bad connection	Contact professional technician

ATTENTION
If problems are not from above reasons,please turn off power supply and contact the distributor or manufacturer for assistance.

Note : Do not dismantle the produce by yourself, and our company shall shoulder no responsibility to the damage of the product or the inquiry of people caused by improper use. Thanks for your cooperation !

Cleaning the plastic parts

1. Soak a piece of soft cloth in hot water or neutral detergent mixed with hot water, wring it out and wipe the plastic parts.

· Do not clean the product with chemicals such as thinners, gasoline and alcohol.

2. Wipe residue away with a clean soft cloth that has been soaked in clean water and wrung out.

· Wring the cloth out thoroughly before using it to wipe the remote controller.

3. Let the plastic parts air dry.

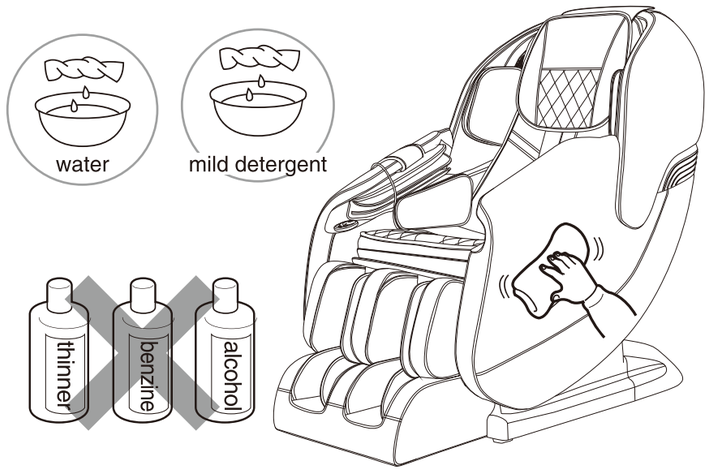

Cleaning the Massagechair Synthetic Leather

Wipe off the synthetic leather with a soft dry cloth.

· Do not clean the product with chemicals such as thinners, gasoline and alcohol.

· When using a leather maintenance product (i.e. cleaning cloths) sold on the market, follow its directions for use.

· If the synthetic leather is very dirty, try the method below.

1. Soak a soft cloth into a solution of 3% to 5% neutral detergent and hot water. Wring it out.

2. Wipe the surface of the synthetic leather with the moist soft cloth.

3. Wipe the detergent residue off of the chair with a soft cloth that has been soaked in clean water and wrung out.

4. All ow the synthetic leather to air dry on its own.

· If the stains are difficult to remove with the method above, soak a piece of melamine foam into a neutral detergent and use it wipe the product.

· Do not dry the surface using a hair dryer.

· Fabric colors may dye the surface of the synthetic leather, becareful when wiping the product with denim or colored cloth.

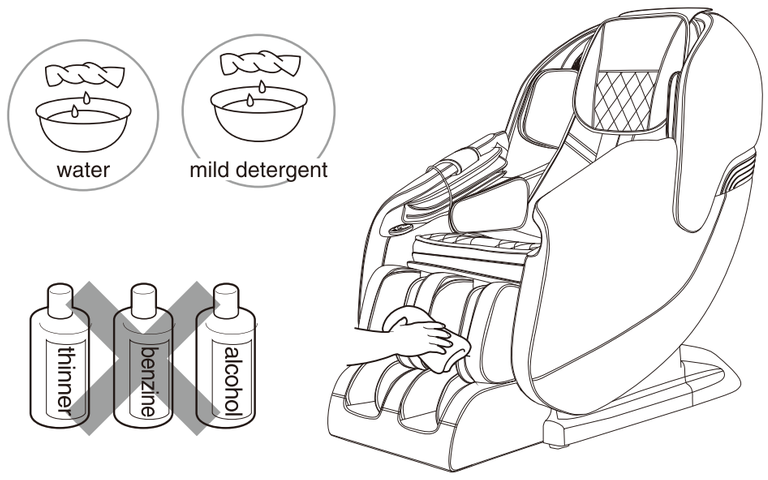

CLEANING INSTRUCTIONS

Environment When Using Product

- Do not use this appliance in a hot and humid environment, such as a bathroom.
- Place and use the unit on a flat surface. Failure to do so may result in an accidental dumping.
- Do not use this appliance in dusty or corrosive atmospheres.
- Do not smoke on this appliance to a void scalding the leather cover.

You Should Not Use This Device If

- If you suffer from severe osteopo rosis
- If you wear an electronic medical device such as a pacemaker
- If you have a high fever or feel unwell
- If you are pregnant or men struating
- If you suffer from a physical condition
- If you have been or dered to recuperate by a doctor
- If your body is wet
- This product is forbidden for children under the age of 14 without supervision

PRODUCT SPECIFICATIONS

Model: PS3100
Rated Voltage: 110V
Rated Frequency: 60hz
Rated Power :120w
Safety Design : Class I

Manufacturer Reserves The Right To Make Changes To Informations Published In This Document, Including Without Limitation Specifications And Product Descriptions, At Any Time And Without Notice.