USER MANUAL

KBU-50 /120 /170 TWO-TEMP ZONES MODELS

Note:
For optimal use of this product, the temperature of the LOWER cooling zone should be set at least 4°F above the temperature of the UPPER cooling zone.
For more information about the operation of this product, please refer to details in this manual

COMPRESSOR WINE CELLAR

KingsBottle™

www.kingsbottle.com

CONTENTS

CONGRATULATIONS

Congratulations and thank you for choosing our KingsBottle Wine Cellars . We are sure you will find your new appliance a pleasure to use . Before you installing and operating the wine cellar, we recommend that you read through the relevant sections of this manual, which provides a description of your wine cellar and its functions .

To avoid the risks that are always present when you use an electric appliance, it is important that the appliance is installed correctly and that you read the safety instructions carefully to avoid misuse and hazards .

We recommend that you keep this instruction booklet for future reference and pass it on to any future owners .

After unpacking the appliance, please check it is not damaged . If in doubt, do not use the appliance but contact us or your local customer care centre

PLEASE NOTE:

IMPORTANT - For optimal use of this product, the temperature of the LOWER compartment should be set at least 4F degree above the temperature of the UPPER compartment.

For example, if your preset temperature of UPPER compartment is 45°F, then the preset temperature of LOWER compartment should be not lower than 49°F degree.

TABLE OF CONTENTS

CHAPTER	CONTENTS	PAGE
Part I	Important Safety & Pre-Use Instructions	3
Part II	Diagram & Description of Wine Cellar	4
Part III	Installation Instructions	5-10
Part IV	Operating Your Wine Cellar	11
Part V	Temperature Settings	11
Part VI	Layout & Storage	12
Part VII	Removing the Rolling Shelf	13
Part VIII	Care & Maintenance	13
Part IX	Troubleshooting Guide	14-15
Part X	Technical Data	16
Part XI	Warranty Information	18

PART I IMPORTANT SAFETY INSTRUCTIONS

Please read the user manual carefully and store in a handy place for later reference . The symbols you will see in this booklet have these meanings:

WARNING

This symbol indicates information concerning your personal safety

CAUTION

This symbol indicates information on how to avoid damaging the appliance

TIPS & INFORMATION

This symbol indicates tips and information about use of the appliance

ENVIRONMENTAL TIPS

This symbol indicates tips and information about economical and ecological use of the appliance

WARNING

TO REDUCE THE RISK OF FIRE, ELECTRICAL SHOCK, OR INJURY WHEN USING YOUR APPLIANCE, FOLLOW THESE BASIC PRECAUTIONS:

1. Read all instructions before using the wine cellar.
2. DANGER or WARNING: Risk of child entrapment.

Child entrapment and suffocation are not only problems of the past. Junked or abandoned appliances are still dangerous… even if they will “just sit in the garage for a few days”.

3. Before you throw away your old wine cellar:
   - Take off the door.
   - Leave the Shelves in pieces so that children may not climb inside easily.
4. Never allow children to operate, play with, or crawl inside the appliance.
5. Never clean appliance parts with flammable fluids. The fumes can create a fire hazard or explosion.
6. Do not store in the vicinity of any other appliance. Do not store near gasoline or any other flammable vapors. The fumes can create a fire hazard or explosion.

WARNING

1. The cellar must be plugged into its own dedicated 110-115V, 50/60Hz AC electrical outlet .
2. The plug must be accessible when the cellar is in position .
3. It is essential the power point is properly earthed to ground . Consult a qualified electrician if you are unsure .
4. Don’t use extension cords or adapter plugs with this cellar .
5. If the power cord is damaged, have it replaced by a qualified service technician .
6. Unplug the cellar before cleaning it, or changing the light bulb to avoid electric shock .
7. Never unplug the cellar by pulling the electrical cord as this may damage it. Grip the plug firmly and pull straight out .
8. Choose a location for your cellar that isn’t too cold . The ambient room temperature should be above 50°F .
9. Stand your cellar in a dry place – avoid areas of high moisture or humidity .
10. Don’t put the cellar in frosty or unprotected areas like a garage or on the verandah .
11. Keep the cellar out of direct sunlight .
12. Don’t locate the cellar near stoves, fires or heaters .
13. When installed correctly, your cellar should:
    - Have adequate space at the back and sides for air circulation (refer to page 5) .
    - Be aligned to the surrounding cupboards .
    - Have doors that will self-close from a partially open position

BEFORE USING YOUR WINE CELLAR

1. Remove the exterior and interior packing.
2. Before connecting the wine cellar to the power source, let it stand upright for approximately 24 hours. This will reduce the possibility of a malfunction in the cooling system from handling during transportation.
3. Clean the interior surface with lukewarm water using a soft cloth.

PART II DIAGRAM & DESCRIPTION OF WINE CELLAR

TWO-TEMP. WINE CELLAR MODELS: KBU-50, KBU-120, KBU-170 SERIES

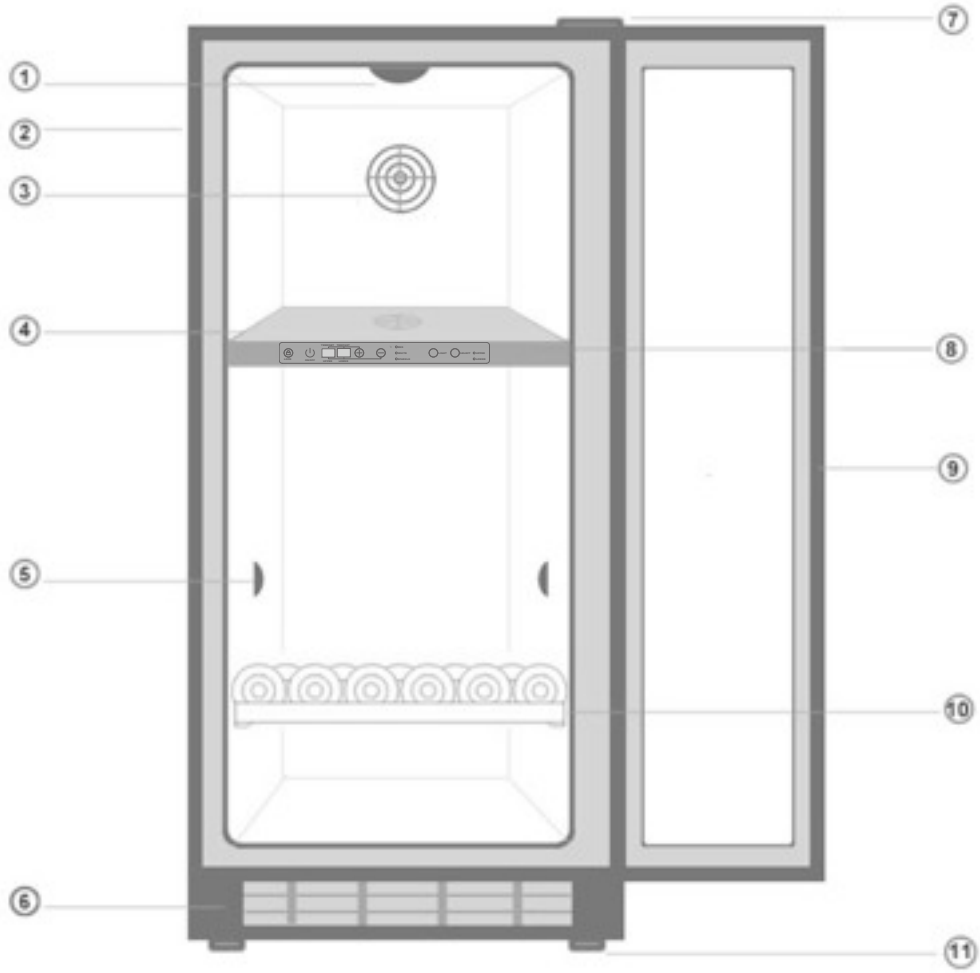

1 Interior Top LED Light
2 Housing
3 Ventilation DC Fan
4 PCB Control Board
5 Interior Side LED Light
6 Front grill
7 Door hinge
8 Display and Control Panel
9 Glass Door
10 Sliding shelf
11 Adjustable stand feet

YOUR WINE CELLAR ALSO INCLUDES THE FOLLOWING:

- Instruction manual
- Two keys
- Top and bottom hinges , also screws for changing the door hinge

Note: Above diagram and description is for TWO-TEMP. WINE CELLAR MODELS: KBU-50, KBU-120, KBU-170 series

PART III INSTALLATION INSTRUCTIONS

CUTOUT DIMENSION ILLUSTRATED

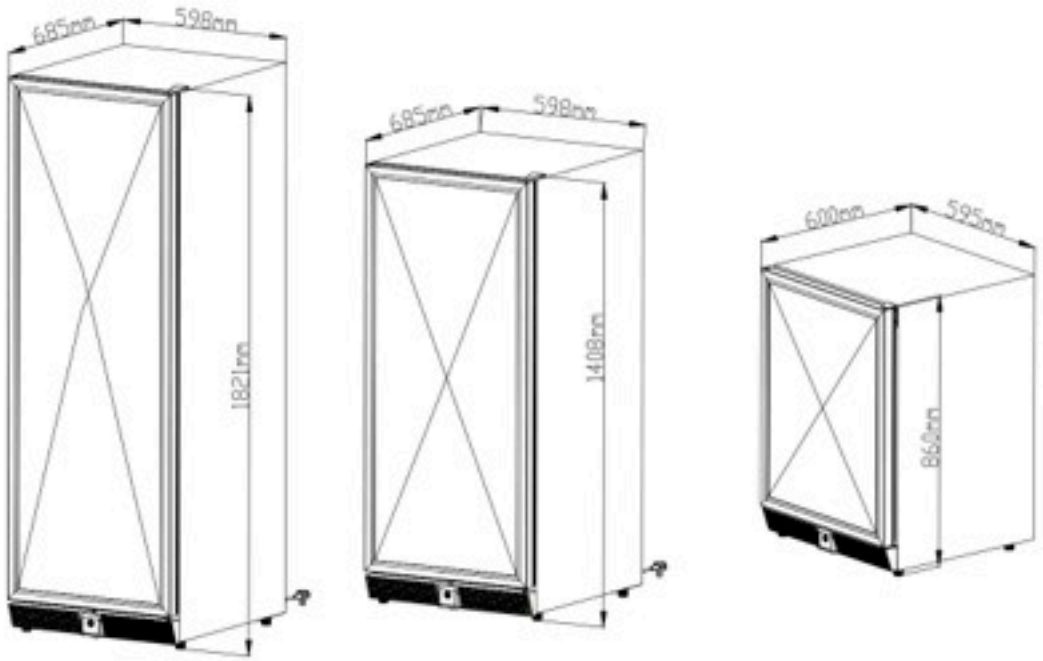

KBU-170 SERIES
23.54”W x 26.97”D x 71.69”H (598W x 685D x 1821H mm) Included stand height 0.98”(25mm)

KBU-120 SERIES
23.54”W x 26.97”D x 55.43”H (598W x 685D x 1408H mm) Included stand height 0.98”(25mm)

KBU-50 SERIES
23.42”W x 23.62”D x 33.86”H (595W x 600D x 860H mm) Included stand height 0.79” (20mm)

MODEL	WIDTH	DEPTH	HEIGHT	INCLUDED STAND HEIGHT	NOTE
KBU-170S	23.54” 598mm	26.97” 685mm	71.69” 1821mm	0.98” 25mm	For BUILT-IN installation, recommend to leave1/2” for each side
KBU-120S	23.54” 598mm	26.97” 685mm	55.43” 1408mm	0.98” 25mm	
KBU-50S	23.42” 595mm	23.62” 600mm	33.86” 860mm	0.79” 20mm	

PART III INSTALLATION INSTRUCTIONS

A. GENERAL INSTALLATION INSTRUCTIONS

1. This appliance is designed for both free standing and built-in (fully recessed) installation.
2. Place your wine cellar on a flat, solid floor that is strong enough to support it when it is fully loaded. To level your wine cellar, adjust the leveling leg at the bottom of the wine cellar
3. When moving your wine cellar, please do not incline it more than 45 degrees.
4. Locate the wine cellar away from direct sunlight and sources of heat (stove, heater, radiator, etc.). Direct sunlight and heat sources may increase electrical consumption. Extreme cold ambient temperatures may also cause the unit to perform improperly.
5. Avoid locating the unit in damp areas.
6. Plug the wine cellar into an exclusive, properly installed and grounded wall outlet. Do not under any circumstances cut or remove the third (ground) prong from the power cord. Any questions concerning power and/or electrical grounding should be directed to a certified electrician or authorized products service center.

B. HANDLE INSTALLATION

Step 1 Take out the handle from the cellar and remove the plastic bag, also remember 2pcs of screw are packed inside.

Step 2 Pull out a bit of rubber gasket from the back side of the hole.

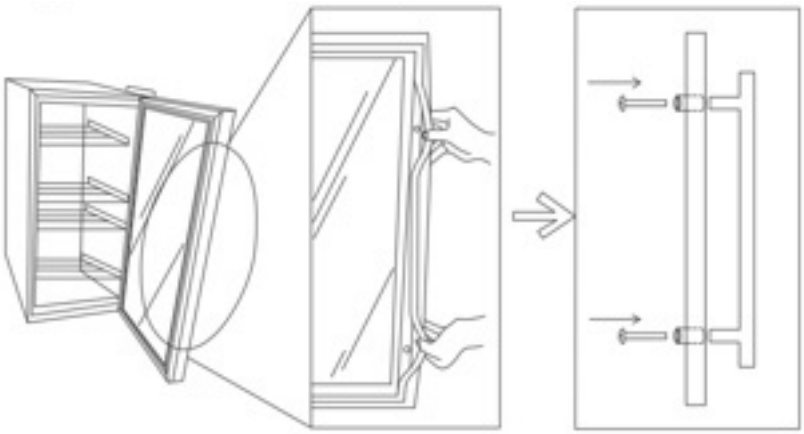

Step 3 Insert the screw through the hole and connect with the handle

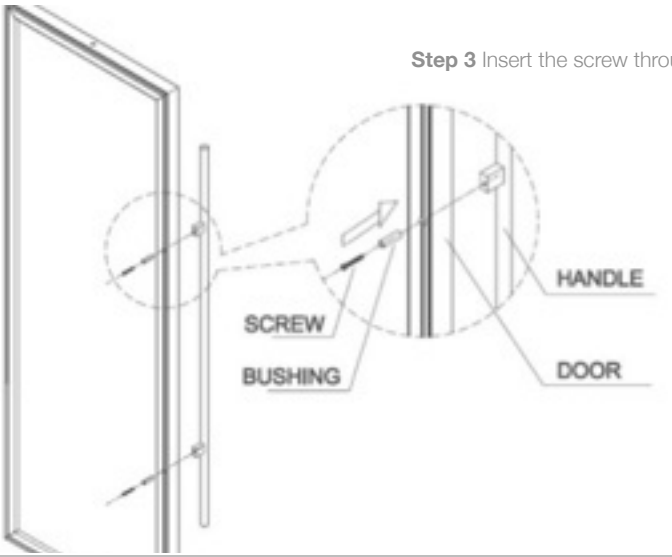

PART III INSTALLATION INSTRUCTIONS

C. INSTALLATION OF FRONT GRILL

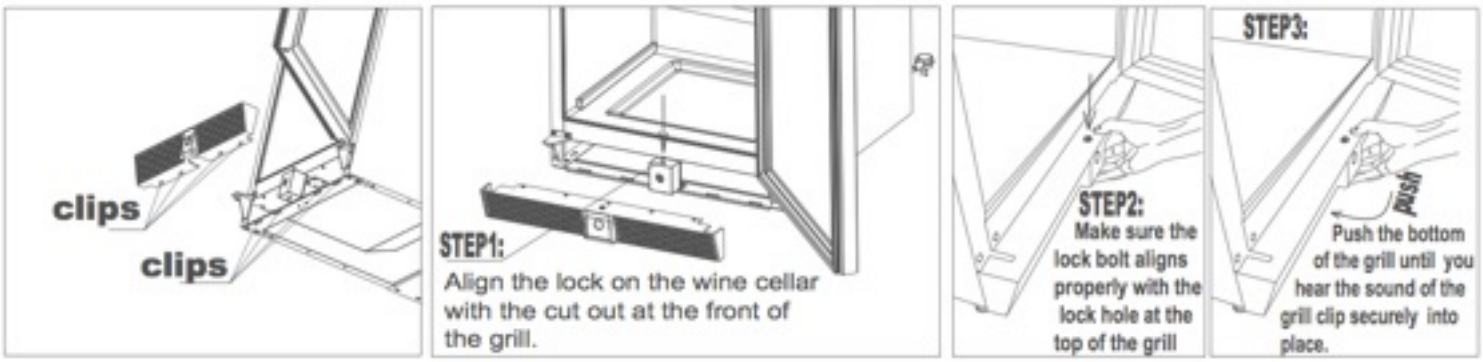

D. INSTALLATION OF BUILT-IN CELLAR (MINIMUM CAVITY SPACE REQUIRED)

The cutout dimension illustrated in figure (D) allows for door swing and access to the pull-out shelves when installed as a built-in appliance.
If installing between frameless cabinets, a 1⁄2” wide filler strip or side panel may be needed on hinge side.
The filler strip will act as a spacer between the appliance case and adjacent cabinet door swing.

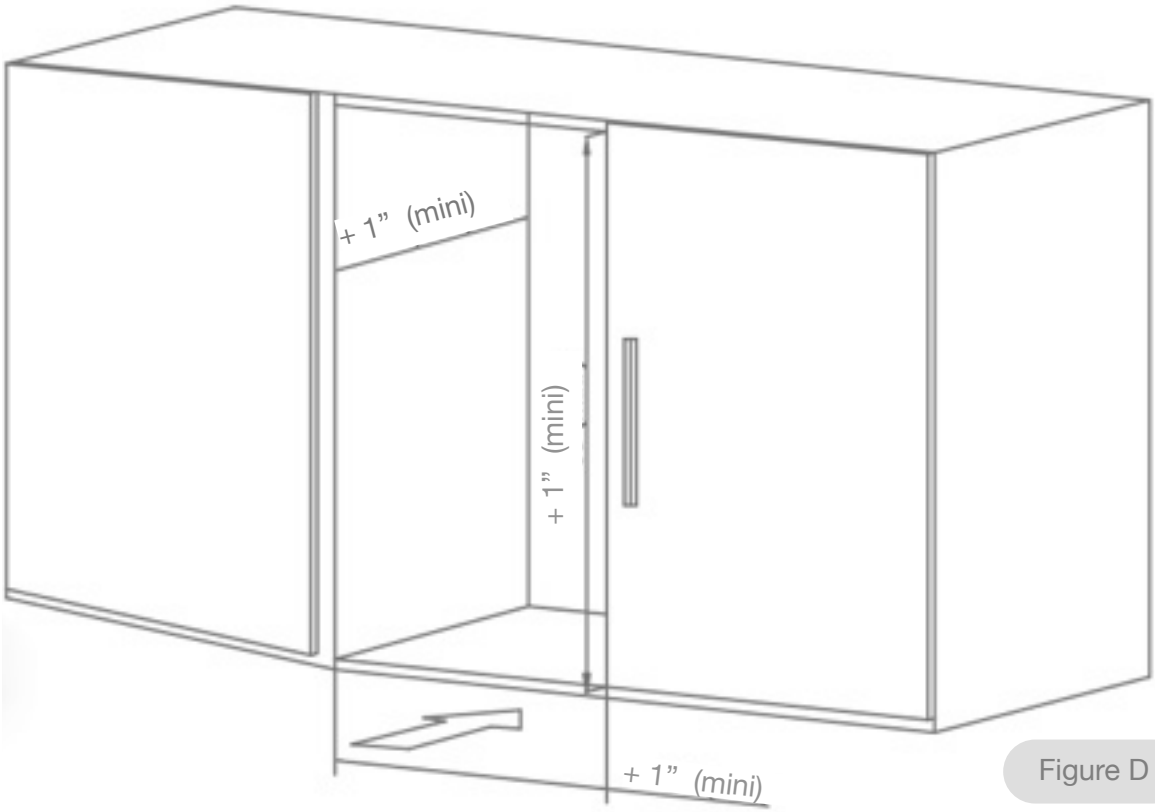

Figure D

Note:
It’s necessary to consider leaving 1/2” for each side, that will be more convenient and easy for BUILT-IN installation. Also need to consider door swing, etc. Failure to allow minimum clearance will void all warranties.

Failure to allow minimum clearances will void all warranties

PART III INSTALLATION INSTRUCTIONS

E. REVERSING THE DOOR SWING OF YOUR APPLIANCE

- The unit is delivered to you with the door opening from the left side (hinge on right side)
- The door of this appliance is capable of opening from either the left or right side. To reverse the door swing of your cooler and open from the right side, please follow the instructions and diagram as follows
- There is a extra set of hinges in the plastic bag which contains instruction manual

INSTRUCTION OF REVERSING DOOR FOR **KBU-120 /170** SERIES

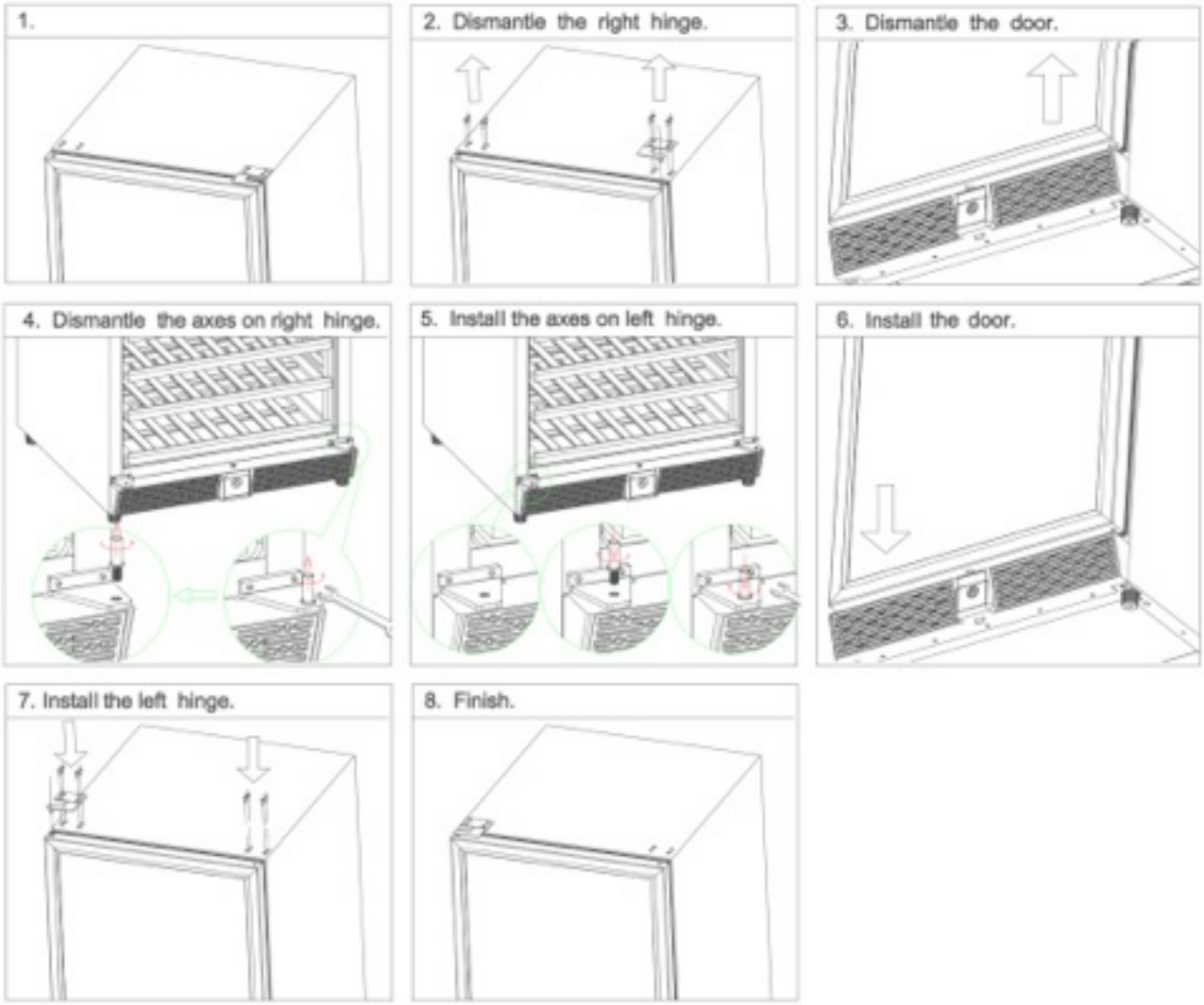

⚠ WARNING

- Before you begin to reverse the door, it is recommended to tape down shelves to avoid movement during the process
- It is recommended to take out the wine bottles from the cellar before reversing the door

PART III INSTALLATION INSTRUCTIONS

INSTRUCTION OF REVERSING DOOR FOR **KBU-50** SERIES

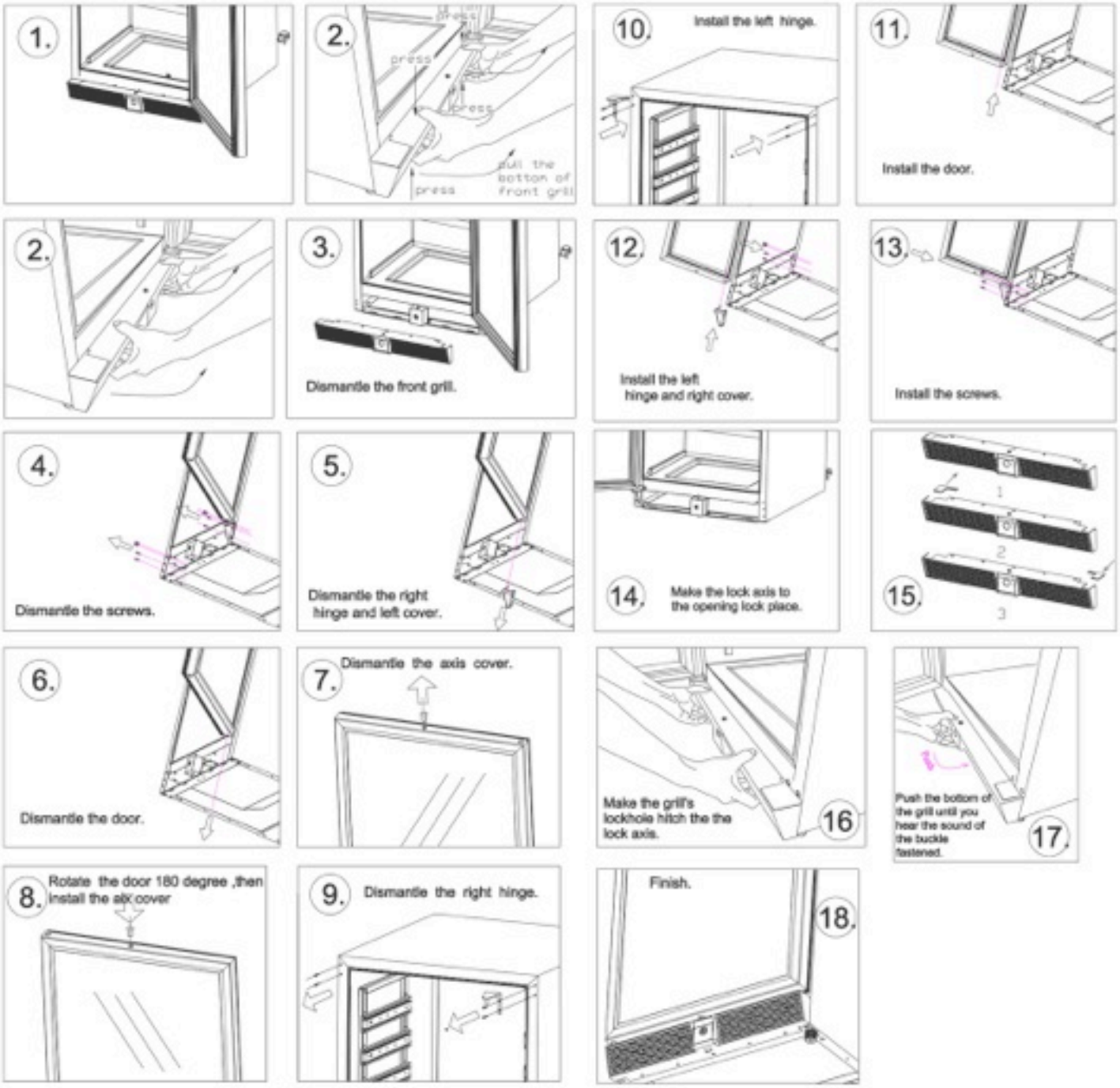

WARNING

- Before you begin to reverse the door, it is recommended to tape down shelves to avoid movement during the process
- It is recommended to take out the wine bottles from the cellar before reversing the door

PART III INSTALLATION INSTRUCTIONS

F. INSTALLING YOUR WINE COOLER

1. Move the appliance into its final position .
2. If the appliance is not tilting back as described earlier, minor adjustments can be made to the leveling legs.
3. Compare the alignment of the appliance to the surrounding cupboard . The top of the appliance should be level from side to side (see diagram below) .

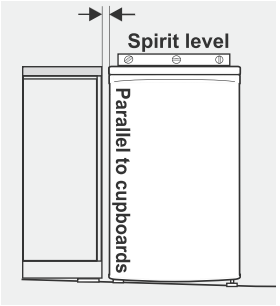

4. If the appliance now rocks from one corner to the opposite rear corner, this means that the floor is uneven. You may need to put some packing under the ridge to the rear of the appliance . You could use thin pieces of solid material such as thin board, vinyl floor tiles or laminate .
5. You may now need to fine tune the installation by repeating steps 2, 3 and 4 .
6. Wipe off any dust that has accumulated during shipping and clean following the directions in Part VIII (Care & Maintenance)
7. Plug the appliance into the power point. Don't use a double adaptor or extension cord .
8. It is recommended that you let the appliance for an hour or two before you put any wine in it . This will confirm that it is operating correctly and make the conditions appropriate for wine storage .

Congratulations! You have successfully installed your cellar/refrigerator/freezer

DOOR LOCK

This unit comes with an optional key lock. The keys are located inside the plastic bag that contains the user manual. To unlock the door, insert the key into the lock and turn counterclockwise. To lock the door, simply reverse the operation making sure the metal pin is engaged completely. Then remove the key and place it is a secure place for safekeeping.

PART IV OPERATING YOUR WINE CELLAR

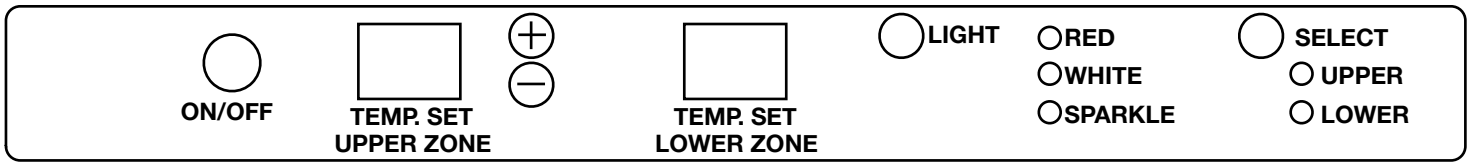

Each wine cellar includes an operating panel on the front of the unit. This operating panel includes several features to operate and control the temperature of both the upper and lower zones of the wine cellar. The operating panel includes the following features:
ON/OFF: Turns the wine cellar power on or off.
TEMP. SET UPPER ZONE: Adjusts and displays, via LED, the desired temperature and the actual temperature of the upper zone.
TEMP. SET LOWER ZONE: Adjusts and displays, via LED, the desired temperature and the actual temperature of the lower zone.

LIGHT: Turns the interior wine cellar light on or off.

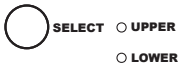

SELECT: Allows user to select to control the UPPER or LOWER zone.

CAUTION:
BEFORE YOU START: The wine cellar should be placed in a location where the ambient temperature is between 32 - 100 degree Fahrenheit. If the ambient temperature is above or below this range, the performance of the unit may be affected. For example, placing your unit in extreme cold or hot conditions may cause interior temperatures to fluctuate.

SETTING THE TEMPERATURE CONTROL
IMPORTANT: IN ORDER FOR THIS UNIT TO FUNCTION AT OPTIMUM LEVEL, THE LOWER COMPARTMENT SHOULD BE SET AT LEAST 4-DEGREES (F) HIGHER THAN THE UPPER COMPARTMENT.

1. Make sure power cord is connected to a properly grounded outlet.
2. Turn Power ON.
3. Press the “SELECT” button to choose the “UPPER” or “LOWER” zone. Each zone is independently controlled.
   - Upper Zone: The temperature setting can be adjusted between 41°F to 60°F
   - Lower Zone: The temperature setting can be adjusted between 45°F to 64°F
4. Set the temperature of the Upper Zone or Lower Zone as you desire by pushing the UP (+) or DOWN (-) button. When you push the two buttons for the first time, the LED readout will show the original temperature set at previous time. (NOTE: The temperature preset at the factory is 41°F for Upper Zone and 45°F for Lower Zone.)
5. The temperature that you desire to set will increase 1°F if you push the UP(+) button once, and alternatively will decrease 1°F if you push the DOWN (-) button once.
6. Once you have set the desired temperature, wait 5 seconds. The temperature shown in the both Upper and Lower zone display panels will automatically switch to show the actual temperature inside the unit. The actual temperature will always be shown until the next time you press the UP (+) or DOWN (-) button to change the temperature settings.
7. **NOTE:** The desired temperatures may fluctuate depending on whether the interior light is ON or OFF and depending on the orientation of the bottles.

PART V
TEMPERATURE SETTINGS FOR WINE SERVICE

1. Different varietals of wine require different temperature settings. The recommended temperature ranges for serving different varietals of wine are listed below. Your wine cellar will indicate when you have set the upper/lower zones to the below temperature ranges.
   - Red Wines: 52-64°F
   - White Wines: 44-51°F
   - Sparkle Wines: 41-43°F
2. If you set the upper or lower zone between 52-64°F, the LED light next to “RED” will light up, indicating that you are within the recommended range for serving Red Wines.
3. If you set the upper or lower zone between 44-51°F, the LED light next to “WHITE” will light up, indicating that you are within the recommended range for serving White Wines.
4. If you set the upper or lower zone between 41-43°F, the LED light next to “SPARKLE” will light up, indicating that you are within the recommended range for serving Sparkle Wines

CAUTION:

1. In the event of a power interruption, all previous temperature settings will be automatically saved and each compartment will return to the previous temperature setting.
2. If the unit is unplugged, loses power, or is turned off, you must wait over 6 minutes before restarting. Within this 6 minutes, compressor protect itself and will not start even power ON again
3. When you use the wine cellar. for the first time or restart the wine cellar after having been shut off for a long time, there will be a few degrees variance between the temperature you select and the one indicated on the LED readout for the first few hours of operation. After a few hours of operation, the temperature will normalize to the displayed temperature.

PART VI LAYOUT AND STORAGE

YOUR CABINET WAS DESIGNED TO STORE A MAXIMUM NUMBER OF BOTTLES SECURELY. WE RECOMMEND THAT YOU OBSERVE THE TIPS BELOW TO OPTIMIZE LOADING.

1. Disperse your bottles even so as not to concentrate weight in any one area, Also, be careful that your bottles do not touch either the back of the cabinet or the step at the bottom.
2. Also make sure that bottles are not all grouped together either at the top or bottom of the cabinet.
3. Never try to pull out more than one rolling shelf at a time.
4. Maximum capacity per shelf is 55 lbs
5. Storage in details for different models (see diagram below):

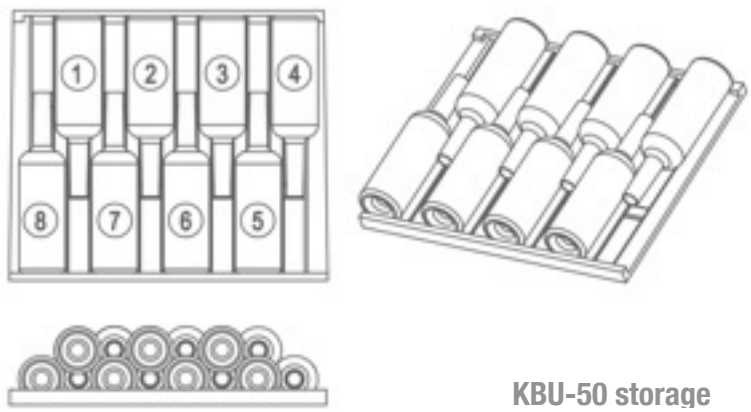

KBU-50 storage

KBU-50 storage

- Each rolling shelf in the LOWER zone is designed to hold one row of 8 bottles. The bottom small shelf can hold 6 bottles.
- Each rolling shelf in the UPPER zone is designed to hold one row of 8 and a second row of 6 bottles for a total 14 bottles on each shelf.

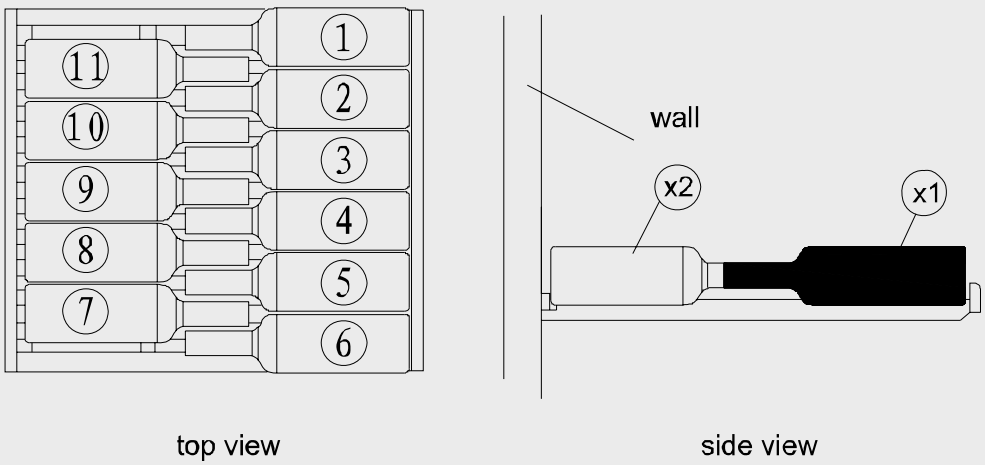

KBU-120 and KBU-170 storage

- Each rolling shelf is designed to hold one row of 11 bottles. You can also fit 5 bottles on the bottom of the cabinet itself.

PLEASE NOTE

Before modifying your cabinet's original configuration in any way, be sure to ask your dealer for advice.

PART VII REMOVING THE ROLLING SHELF

TO REMOVE A ROLLING SHELF:

1. Remove all bottles
2. Pull the shelf out as far as possible
3. Push the LEFT side lever downward but RIGHT side lever upward (as illustrated below)
4. Remove the shelf

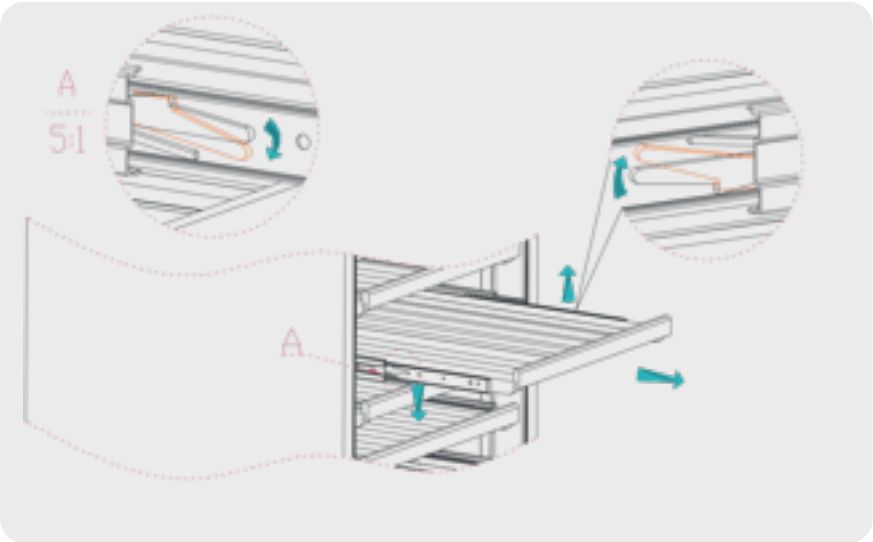

PART VIII CARE AND MAINTENANCE

CLEANING YOUR WINE CELLAR

WARNING

BEFORE CLEANING: Turn off the power, unplug the appliance, and remove all items including all shelves.

- Wash the inside surfaces with warm water and baking soda solution. The solution should be about 2 tablespoons of baking soda with a quart of water.
- Wash the shelves with a mild detergent solution.
- Wring excess water out of the sponge or cloth when cleaning area of the controls, or any electrical parts.
- Wash the outside cabinet with warm water and mild liquid detergent. Rinse well and wipe dry with a clean soft cloth.
- Dust the front grill and back of the unit twice yearly. Make sure the power is off before cleaning.
- It is recommended to clean the unit completely inside and out once a year to maximize the longevity of the wine cellar.

POWER FAILURE

Most power failures are corrected within a few hours and should not affect the temperature of your appliance if you minimize the number of times the door is opened. If the power is going to be off for a longer period of time, you need to take the proper steps to protect your contents.

VACATION TIME

Short vacations: You may leave the Wine Cellar operating during vacations of less than three weeks.
Long vacations: If the appliance will not be used for several months, remove all items and turn off the appliance. Clean and dry the interior thoroughly. To prevent mold growth, leave the door open slightly, blocking it open if necessary.

MOVING YOUR WINE CELLAR

1. Remove all items.
2. Securely tape down all loose items (shelves) inside your appliance.
3. Turn the adjustable leg up to the base to avoid damage.
4. Tape the door shut.
5. Be sure the appliance stays secure in the upright position during transportation. Also protect the outside of the appliance with a blanket or similar item.

ENERGY SAVING TIPS

The wine cellar should be located in the coolest area of the room, away from heat producing appliances, and away from direct sunlight.

PART IX TROUBLESHOOTING GUIDE

Many common issues with your wine cellar can be solved very easily, Try the tips below to troubleshoot your wine cellar should you experience any problems.

Code	Description	Solution
E1	When the temp. in UPPER zone is 4F (2C degree) higher than LOWER zone, E1 display on panel.	With the temp. changes, temp. in UPPER zone is lower than LOWER zone, E1 will disappear automatically. So, just wait for about one hour and check again.
F1	1. When the evaporator temperature is lower than 0F (-18C degree) F1 display on panel 2. F1 meaning the fridge is at defrosting mode. 3. During DEFROSTING period, evaporator fan is operating but compressor stop. 4. After evaporator temp. is higher than 39F (4C degree), F1 will disappear	It's normal, nothing need to do. Wait for 3 hours and check again. Or, turn OFF the power, open the door and wait for 3 hours, then check again.
F2	1. If compressor keeps operating continuously for over 8 hours, the fridge will automatically enter DEFROSTING mode and F2 display on panel 2. F2 meaning the fridge is at defrosting mode. 3. During DEFROSTING period, evaporator fan is operating but compressor stop. 4. F2 will disappear after 20 minutes	It's normal, nothing need to do. Wait for 30 minutes and check again.
C1	C1 displaying on panel, means sensor in UPPER zone is open-circuit. Compressor stop operating and no cooling	Need engineer to check 1. Socket/plug with UP mark in PCB is bad connected. 2. The sensor is damaged, need to replace it 3. Repair or replace the PCB
C2	C2 displaying on panel, means sensor in LOWER zone is open-circuit. Compressor stop operating and no cooling * This does not apply to SINGLE zone models	Need engineer to check 1. Socket/plug with DOWN mark in PCB is bad connected 2. The sensor is damaged, need to replace it 3. Repair or replace the PCB
C3	C3 displaying on panel, means evaporator sensor is open-circuit. Compressor stop operating and no cooling	Need engineer to check 1. Socket/plug with PTC mark in PCB is bad connected 2. The sensor is damaged, need to replace it 3. Repair or replace the PCB
U1	U1 displaying on panel, means sensor which is in the UPPER zone is short-circuit. Compressor stop operating and no cooling	Need engineer to check 1. The sensor is damaged, need to replace the sensor which is connected to UP socket/plug in PCB 2. Repair or replace the PCB
U2	U2 displaying on panel, means sensor which is in the LOWER zone is short-circuit. Compressor stop operating and no cooling * This does not apply to SINGLE zone models	Need engineer to check 1. The sensor is damaged, need to replace the sensor which is connected to DOWN socket/plug in PCB 2. Repair or replace the PCB
U3	U3 displaying on panel, means evaporator sensor is short-circuit. Compressor stop operating and no cooling	Need engineer to check 1. The sensor is damaged, need to replace the sensor which is connected to PTC socket/plug in PCB 2. Repair or replace the PCB
No Code	After the temp. is lower than 32°F (0C degree) or higher than 69°F (20C degree), the buzzer will alarm and remind user need to pay attention.	Normal, nothing need to do

PART IX TROUBLESHOOTING GUIDE

PROBLEM	POSSIBLE CAUSE	Solution
Wine Cooler does not operate	1. Not plugged in 2. The appliance is turned OFF 3. The circuit breaker tripped or a fuse has blown out 4. PCB faulty	Press ON/OFF Check and make sure the power plug is well connected Ask engineer for help
Wine cooler is not cold enough; can not cooling down to preset temp.	Compressor does not start	ask engineer for help, check the connection of compressor
	Compressor self-protected and stop operating	Ambient temperature is too high and over 38C degree Air venting is not smooth, check the air duct and make sure it is not blocked Fan operates slowly or faulty and stop operating. Door is not closed completely, or door open for long time Compressor or its components faulty
	Fans stop working or low speed operating	Ask engineer for help, power on the cooler, check the fan whether the voltage is normal or not. If the voltage is not normal, it should be PCB or circuit faulty. If the voltage is normal, the fan should be damage
	Evaporator ice up	Turn OFF the cooler for one hour, sometimes need also open the door, ice on evaporator will melt. Then turn ON and check again.
	Door is not well closed	Check the door lock, shelves, or other objects, make sure door is well closed. Check the sealing rubber, make sure door is well sealed. Check the door hinges, make sure they are not loose
	Condenser is dusty	Wash and clean the condenser
	Cooling system faulty (Gas leakage or blockage)	Ask engineer for help
Compressor start and stop frequently	The door gasket does not seal properly.	Use hair dryer to blow hot air and make the door seal smooth.
	The sensor connection is wrong.	According to the wiring diagram and make the correct connection of sensor
	The sensor is faulty.	Replace with new sensor
	The door is opened too often.	Reduce the times / frequency of door opening.
The light does not work.	Not plugged in, or the light button is “OFF”. Light itself faulty. PCB faulty.	Check and make sure the light button is ON, or ask engineer for help.
The Wine Cooler seems to make too much noise.	The stand feet is not leveling, vibrations lead to noise	Adjust the stand feet and assure they are on level.
	Pipe hit other objects and lead to noise	Adjust the position of pipe slightly
	At the moment of compressor shut down or start, it is normal for the noise from the vibration generated by the internal moving parts due to inertial motion.	nothing is necessary
	The ratting noise may come from the flow of the refrigerator, which is normal. As each cycle ends, you may hear gurgling sounds	nothing is necessary
The door will not close properly.	Door is blocked by the door lock, shelves, or other objects.	Remove the barrier
	Door sealing rubber is deformed	Repair or replace the rubber seal
	Door hinges are not loose.	Adjust and fasten the hinges.
Ice up	Outlet / suction outlet blockage	Remove the barrier
	Fans stop working or low speed operating	Ask engineer for help, power on the cooler, check the fan whether the voltage is normal or not. If the voltage is not normal, it should be PCB or circuit faulty. If the voltage is normal, the fan should be damage
	The door gasket does not seal properly; or door is opened too often	Use hair dryer to blow hot air and make the door seal smooth.
	Gas leakage or cooling system blockage	Ask engineer for help
External cabinet seems too hot	Ambient temperature is too high, or direct sunshine	Using conditions need to be improved
	Front grill outlet / suction outlet blockage	Remove the barrier
	Fans stop working or low speed operating	Ask engineer for help, power on the cooler, check the fan whether the voltage is normal or not. If the voltage is not normal, it should be PCB or circuit faulty. If the voltage is normal, the fan should be damage
Water drop on glass door	Ambient humidity is high	Use a soft cloth to clean the water
	Door is opened too often	Reduce the times / frequency of door opening.
	The door gasket does not seal properly	Use hair dryer to blow hot air and make the door seal smooth.

PART X TECHNICAL DATA

MODEL NO.	KBU-170	KBU-120	KBU-50
ACCOMMODATION (BOTTLES)	170	120	50
TYPE OF COOLING	compressor with air-circulated fan cooling	compressor with air-circulated fan cooling	compressor with air-circulated fan cooling
CLIMATE TYPE	N	N	N
ELECTRICITY PROTECTION GRADE	I	I	I
NOMINAL VOLTAGE/ FREQUENCY	110-115V/50-60HZ	110-115V/50-60HZ	110-115V/50-60HZ
RATED POWER(W)	200W	190W	140W
AMBIENT TEMPERATURE	32 - 100 °F	32 - 100 °F	32 - 100 °F
TEMPERATURE RANGE	Upper Zone: 41-60 °F; Lower Zone: 45-64 °F	Upper Zone: 41-60 °F; Lower Zone: 45-64 °F	Upper Zone: 41-60 °F; Lower Zone: 45-64 °F
NET WEIGHT	286.60 lbs (130 KGS)	198.41 lbs (90 KGS)	112.43 lbs (51 KGS)
GROSS WEIGHT	310.85 lbs (141 KGS)	224.87 lbs (102 KGS)	121.25 lbs (55 KGS)
DIMENSION	23.54”W x 26.97”D x 71.69”H (598W x 685D x 1821H mm) Included stand height 0.98” (25mm)	23.54”W x 26.97”D x 55.43”H (598W x 685D x 1408H mm) Included stand height 0.98” (25mm)	23.42”W x 23.62”D x 33.86”H; 595W x 600D x 860H mm) Note: Included stand height 0.79” (20mm)

NOTES

NOTES

NOTES

PART XI WARRANTY INFORMATION

Please speak to your Retailer before calling **BTO AMERICA LIMITED** if you did not purchase your Wine Cellar directly from **BTO AMERICA LIMITED**

Limited warranty – 90 day replacement plan with a free 9 months upgrade, totaling 1 year, on parts and labor from the date of shipment. For customer service, please contact **BTO AMERICA LIMITED** by e-mail (service@kingsbottle.com) .

The limited warranty does not cover: Damage due to such things as accident, misuse, abuse, mishandling, neglect, unauthorized repair or any other cause beyond the control of the seller whether similar or dissimilar to the foregoing. Purchaser understands and acknowledges that the goods sold here are wine cellars, which house wine. Purchaser assumes all the risk of using these units, including risk of spoilage, humidity variations, temperature variations, leaks, fires, water damage, mold, mildew, dryness and similar perils that may occur.