FRIGIDAIRE

All about the

Use & Care

of your Dishwasher

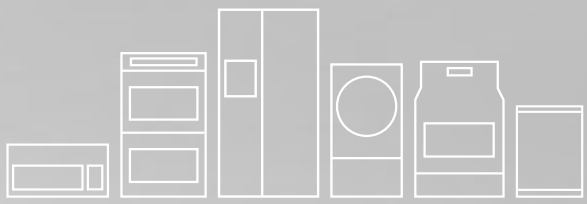

TABLE OF CONTENTS

Important Safety Instructions.....2

Product Registration 3

Features at a Glance.....4

Operating Instructions 4-8

Preparing and Loading Dishes 9-12

Dishwasher Dispenser and Detergents .. 13-14

Factors Affecting Performance.....15

Care and Cleaning 16-17

Before you Call..... 17-19

Major Appliance Warranty 20

ANC: 117904910 Rev.E (January 2014)

www.frigidaire.com USA 1-800-944-9044 www.frigidaire.ca Canada 1-800-265-8352

IMPORTANT SAFETY INSTRUCTIONS

WARNING

When using your dishwasher, follow basic precautions, including the following:

For your Safety

- Use your dishwasher only as instructed in this Use and Care Manual.
- This Manual does not cover every possible condition and situation that may occur. Use common sense and caution when installing, operating and maintaining any appliance.
- NSF certified residential dishwashers are not intended for licensed food establishments.
- DISHWASHER MUST BE ELECTRICALLY GROUNDED. This appliance must be connected to a ground metal, permanent wiring system, or an equipment-grounding conductor must be run with the circuit conductors and connected to the equipment-grounding terminal or lead on this appliance. Read the Installation Instructions for details.
- This dishwasher is designed to operate on regular house current (120V, 60Hz). Use a circuit equipped with a 15 ampere fuse or circuit breaker. Use a 20 ampere fuse if dishwasher is connected with a food disposer.
- Do not operate dishwasher unless all enclosure panels are in their proper place.
- Keep young children and infants away from dishwasher when it is operating.
- Do not let children abuse, sit, stand or play on door or racks of a dishwasher.
- To reduce the risk of injury, do not allow children to play in or on the dishwasher.
- Use only detergents and rinse agents recommended for use in a dishwasher.
- Store dishwasher detergent and rinse agents out of the reach of children.
- If the dishwasher drains into a food disposer, make sure disposer is completely empty before running dishwasher.
- Do not wash plastic items unless marked: "Dishwasher Safe" or equivalent. Check with manufacturer for recommendations, if not marked. Items that are not marked dishwasher safe may melt and create a potential fire hazard.
- When loading items to be washed:
  - -Locate sharp items and knives so that they are not likely to damage the door seal or tub.
  - -Load sharp items and knives with the handles up to reduce the risk of cut-type injuries.
- Do not tamper with controls.
- Use care unloading the dishware when the SANITIZE option has been selected. Contents may be hot to the touch immediately after the end of cycle.
- Under certain conditions, hydrogen gas may be produced in a hot water system that has not been used for 2 weeks or more. HYDROGEN GAS IS EXPLOSIVE. If hot water system has not been used for such a period, before using dishwasher, turn on all hot water faucets and let water flow from each for several minutes. This will release any accumulated hydrogen gas. HYDROGEN GAS IS FLAMMABLE. Do not smoke or use an open flame during this time.
- Do not store or use combustible materials, gasoline or other flammable vapors and liquids in the vicinity of this or any other appliance.
- Disconnect electrical power to dishwasher before servicing.
- Repairs should be done by a qualified technician.
- To avoid entrapment and/or suffocation, remove door or door latch mechanism from any dishwasher that is discarded or not in use.

WARNING

To reduce the risk of fire, electrical shock or injury when using your dishwasher, follow the above basic precautions .

WARNING

This symbols will help alert you to such dangers as personal injury, burns, fire and electrical shock.

SAVE THESE INSTRUCTIONS

PRODUCT REGISTRATION

Thank you for choosing **Frigidaire**

This Use & Care Guide is part of our commitment to customer satisfaction and product quality throughout the service life of your new appliance.

We view your purchase as the beginning of a relationship. To ensure our ability to continue serving you, please use this page to record important product information.

_____

Purchase Date

_____

Model Number

_____

Serial Number

Registering your product with Frigidaire enhances our ability to serve you. You can register online at **www.frigidaire.com** or by dropping your Product Registration Card in the mail.

NOTE

Very Important Information - Read Before Operating Your Dishwasher!
Normal Operating Sounds

This dishwasher does not sound like most dishwashers - **IT'S QUIETER**.

Your Direct Feed Wash System dishwasher uses energy efficient motors for the wash and drain portions of the cycle you select. Each cycle has a series of water fills and drains for washing and rinsing dishes. As each cycle begins, you may-or may not- hear the drain motor. The next sound you will hear is the splashing water as it enters the tub.

PLEASE BE ADVISED: If you compare this dishwasher to previous models, you may be surprised at what you DON'T hear.

NOTE

The dishwasher is programmed to remember your last cycle so you do not have to reset each time. To start the dishwasher using the same cycle and options selected on the previous wash, just press the START/CANCEL pad.

NOTE

Not all cycles and options available on all models.

NOTE

Why Energy Efficient Units run long cycles:
Several factors are important to washing dishware. The energy use of the dishwasher was reduced by applying more of the factors that don't use so much energy and less of the ones that use more. As a result, you will see that the wash cycles take longer.

FEATURES AT A GLANCE

Your dishwasher cleans by spraying a mixture of hot water and detergent through the spray arms against soiled surfaces. First, the dishwasher drains for a few seconds to remove soils dropped while loading, then fills with water covering the filter area. Water is then pumped through the spray arms. Soil particles go through and across the filter and down the drain as the water is pumped out. This series of steps are repeated as needed. The number of water fills varies with the cycle being used.

Features may vary according to model

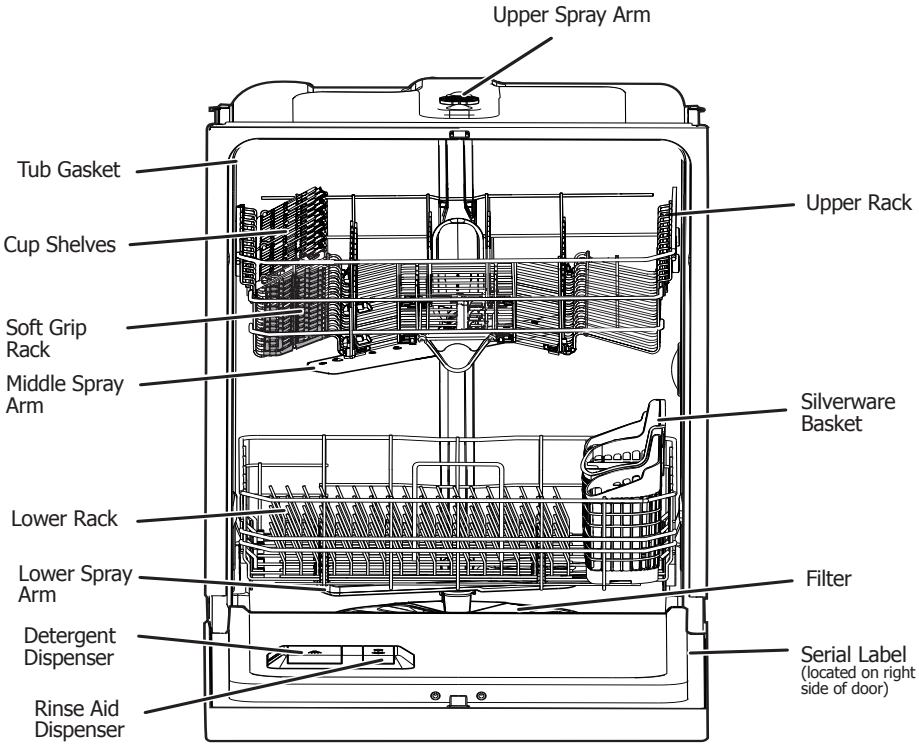

Operating Instructions

Getting Started

1. Load Dishwasher (See Preparing and Loading Dishes).
2. Add detergent (See Dishwasher Dispenser & Detergents).
3. Add Rinse Aid, if needed (See Rinse Aid).
4. Select desired CYCLE (See Cycle Chart).
5. Select desired OPTION (See Energy Options).
6. Run hot water faucet nearest dishwasher until water is hot. Turn water off.
7. To start, press START/CANCEL pad and close door.

NOTE

Your dishwasher uses a DishSense™ Technology to understand how much food is on the dishes and then adjusts the cycle accordingly.

CAUTION

Property Damage Hazard

Before starting dishwasher be sure that the water is connected and turned on. Failure to do so may cause damage to the pump seal and result in water leakage.

Wash Cycle Selections

Cycle times are approximate and will vary with options selected. Hot water is necessary to activate dishwasher detergent and melt fatty food soils. An automatic sensor will check the incoming water temperature and, if it is not hot enough, the cycle will be lengthened for automatic water heating in the main wash and final rinse of all cycles. This happens even when HI-TEMP WASH option has not be selected. When HI-TEMP WASH is selected, an even higher temperature will be reached to handle heavier soil loads.

Recommended Cycle for typical use:

The Normal cycle with its factory default options of normal temperature and heated dry together provide the best all around performance. This cycle selection is recommended for everyday use and is suitable for a large range of both dish load sizes and food quantities remaining on those dishes.

Option Selections

Wash Pressure

The programmed cycles default to the "surge" pressure option which varies the pressure optimally for the cycle's intended normal use. If, for some special circumstance, either a very low "spray" or very high "scour" pressure is desired that may be selected. Due to wash cycle optimization, some pressure options are not selectable in all wash cycle.

Wash Temp

The programmed cycles default to the "normal" temperature option, to choose HI-TEMP or SANITIZE press WASH TEMP pad again.

Hi-Temp Wash Option

HI-TEMP WASH option is selected, by pressing the WASH TEMP pad, the dishwasher heats water in the main wash to approximately 140°F (60°C).

This increase in water temperature helps dishwasher detergent remove food grease and soil from dishes more effectively and aids in drying.

Sanitize Option

To sanitize your dishes and glassware, select SANITIZE option, by pressing WASH TEMP pad. When selected, the light will come on and remain on until end of cycle. The water temperature in the final rinse will be raised to 155°F (68°C) and will maintain that temperature for 9 minutes. This option is available in Heavy and Normal Cycles. Only these sanitization cycles have been designed to meet NSF requirements.

The cycle time will be extended until the proper water temperature is reached. Washing action will continue during the water heating delay. For best results, the incoming water temperature should be at least 120°F (49°C).

The sanitize criteria may not be satisfied if there is an interruption of the cycle, power failure or if the incoming water temperature is below 120°F (49°C).

To turn off the SANITIZE option, press the Wash Temp pad. The SANITIZE light will turn off.

Heat Dry

The HEATED DRY option in combination with rinse aid will enhance drying performance. HEATED DRY option is available on all cycles.

Air Dry

The AIR DRY option will reduce temperature in the hot rinse of the selected wash cycle. This option will slightly decrease energy usage but will increase the likelihood that dishware will not be dry.

My Favorite Cycle

The MY FAVORITE CYCLE option allows you to program your preferred cycle and options into one button. Once Programmed, simply press the MY FAVORITE CYCLE button followed by the START/CANCEL pad will select the programmed cycle and options.

To Program the MY FAVORITE CYCLE button:

1. Select your preferred cycle and options
2. Hold the MY FAVORITE CYCLE button for 3 seconds.

The LED over the MY FAVORITE pad turns on indicating the MY FAVORITE CYCLE option has been programmed. To change the MY FAVORITE CYCLE option simply repeat steps one and two above.

Delay Start

The DELAY START option allows you to automatically delay starting your dishwasher from 1-24 hours.

To activate press the DELAY START pad until the desired delay time shows in the STATUS window and press START.

To cancel the DELAY START option and begin the cycle before the delay period is over, press the START/CANCEL pad until the status window show cycle duration. Press START/CANCEL again and close the door.

Child Lock Controls

To prevent children from accidently changing the dishwasher cycle or starting the dishwasher, lock the dishwasher controls by pressing the DELAY START pad for 3 seconds and releasing. The status window will display “loc”. To unlock the controls, press the DELAY START pad until “loc” goes out.

To Cancel a Cycle

To cancel a cycle at anytime, open the door and press the START/CANCEL pad until the 1 min drain feature is initiated. Close the door and the drain cycle will begin. You will hear a tone for the start and completion of the drain cycle. When the door is opened, the last cycle selected will be displayed. If desired, a new cycle can now be selected by pressing START/CANCEL pad and upon closing the door the cycle will begin.

Status Window

The STATUS window, available on some models, indicates the following activity:

1-24.....	Number of delay start hours. The last hour will count down in minutes.
CL.....	Close dishwasher door. The status indicator lights will also flash to indicate current cycle status.
MINUTES.....	Number of minutes left in cycle (1-199).
L0----L6.....	Level of Rinse Aid dosage.

In the unlikely event the dishwasher malfunctions, the STATUS window may display one of the following codes: "i10" - refer to dishwasher won't run or fill and try to solve the problem "i20" - refer to dishwasher does not drain properly and try to solve the problem. If, after the check, the problem remains, or if the status window shows other error codes, contact the Frigidaire Customer Care Center at **1-800-944-9044**. They will be able to provide assistance in troubleshooting the problem and/or locating an authorized service technician, if needed.

Status Indicator Lights

The CLEAN light will remain on until the door is opened.

When the SANITIZE option is selected and the criteria is met, the Sanitized indicator will display and remain on until the door is opened. If the sanitization criteria is not achieved, the indicator will not display. This can happen if the cycle is interrupted or if the sanitization temperature could not be reached due to incoming water temperature significantly below 120^{0}F.

Green Light

When the GREEN LIGHT illuminates on the floor this indicates that the wash cycle is complete.

Cycle Chart

Cycle	Settings	Water (approx.)	Time * (Hours)	Washes/ Rinses
Heavy Wash/Power Plus For pots, pans casseroles and dinnerware with dried-on or baked-on soils, and silverware	**Default** Surge, Hi-Temp and Heat **Options** Scour, Sanitize and Air	7.0 - 7.9 gal. 26.6 - 29.9 liters	2 $^1/_4$ - 3 $^1/_4$	4 Washes 3 Rinses
Normal Wash For regularly soiled dishes and silverware.	**Default** Surge, Normal and Heat **Options** Scour-spray, Hi-Temp Sanitize and Air	2.9 - 7.3 gal. 11.0 - 27.7 liters	2 - 3 $^1/_4$	5 Washes 2 Rinses
Quick Wash A fast wash for lightly soiled dishes and silverware	**Default** Scour, Normal and Heat **Options** Air	4.5 gal. 17.1 liters	$^1/_2$	3 Washes 1 Rinses
China Crystal For lightly soiled China and Crystal	**Default** Spray, Normal and Heat **Options** None Available	5.7 gal. 21.5 liters	1 $^1/_4$	3 Washes 2 Rinse
Energy Saver For lightly soiled pre-rinsed dishes and silverware	**Default** Surge, Normal and Air **Options** Scour-Spray	4.4 - 7.9 gal. 16.5 - 29.7 liters	1 $^1/_4$ - 1 $^3/_4$	5 Washes 3 Rinse
Rinse Only For rinsing dishes that will be washed later.	**Default** Surge **Options** None Available	2.0 gal. 7.6 liters	$^1/_4$	2 Rinses

NOTE*

The time remaining may suddenly increase or drop several minutes. This means that the dishwasher received input from the Smart Sensor concerning the soil load and has automatically adjusted the cycle length.

Dish Preparation

Scrape away large pieces of food, bones, pits, toothpicks, etc. The continuously filtered wash fluid will remove remaining food particles. Burned-on foods should be loosened before loading. Empty liquids from glasses and cups.

Foods such as mustard, mayonnaise, vinegar, lemon juice and tomato based products may cause discoloration of stainless steel and plastics if allowed to sit for a long period of time. Unless the dishwasher is to be operated at once, it is best to pre-rinse or use the rinse only cycle to rinse off these food soils.

- Load racks so that large items do not prevent the detergent dispenser from opening.
- Check manufacturer's recommendations before washing items in question.
- If the dishwasher drains into a Food Disposer, **be sure disposer is completely empty before starting dishwasher.**

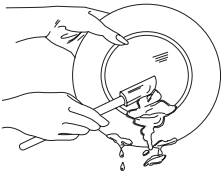

Loading the Upper Rack

Features and appearance of racks and silverware basket may vary from your model.

The upper rack is designed for flexibility in loading a wide variety of items including cups, glasses, stemware, small plates, bowls, etc.

Load glasses and plastic items in upper rack only.

Load items with open end facing down for better cleaning and draining.

Damage may occur if delicate items touch each other during dishwasher operation.

Long-handled knives and utensils can be placed in upper rack.

Be sure nothing protrudes through the bottom of the rack to block rotation of middle spray arm.

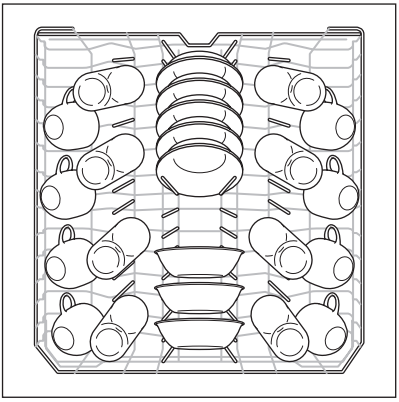

8 place settings standard loading pattern

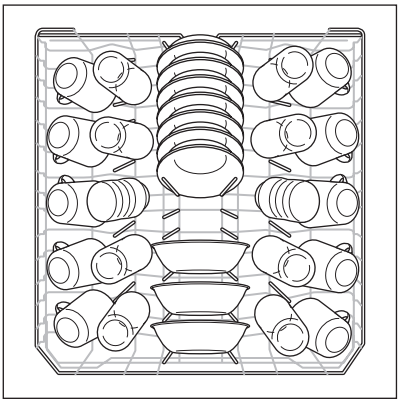

10 place settings standard loading pattern

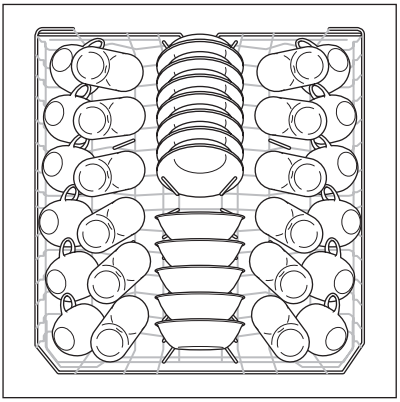

12 place settings standard loading pattern

Adjustable Upper Rack

The top rack height can be easily adjusted to accommodate loading taller dishes in either rack. To raise the rack to the upper position, lift rack until both sides are at the same height and the rack will secure in place. Ensure that the rack remains level from front to back with both sides at the same height. To lower rack lift the rack slightly then push down and release.

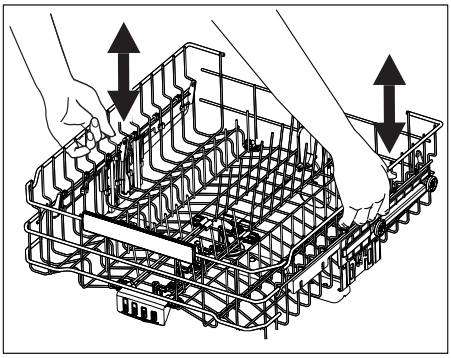

Fold-down Tines Upper Rack

The fold-down tines in the upper rack makes it easy to load those extra large and hard-to-fit items. The tines may be left up for normal use or folded down for more flexible loading.

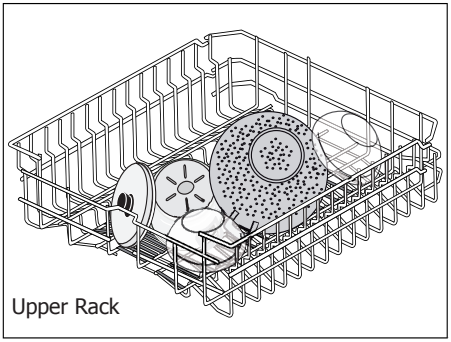

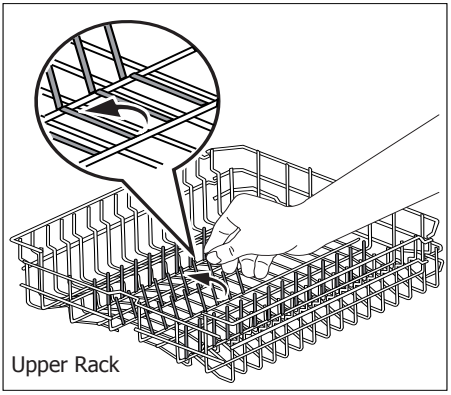

Loading the Bottom Rack

Features and appearance of racks and silverware basket may vary from your model.

The bottom rack is best for plates, saucers, bowls, and cookware. Large items should be placed along the edge so they do not block the spray arm rotation. For best results, place bowls, casseroles, and sauce pans with soiled surface facing down or toward the center. Tilt slightly for better drainage.

Make sure tall items do not block spray arm rotation.

Be sure pan handles do not protrude through the bottom of the rack and block the spray arm rotation.

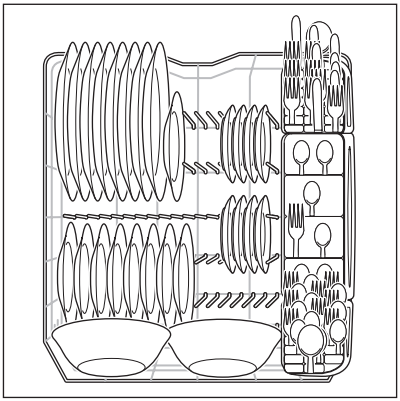

8 place settings standard loading pattern.

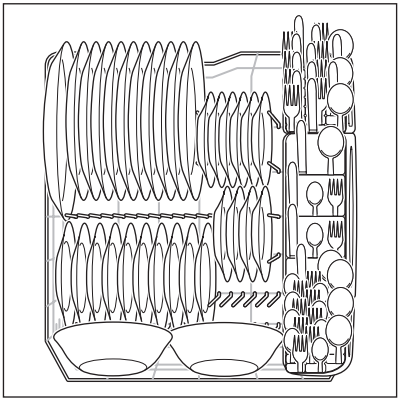

10 place settings standard loading pattern.

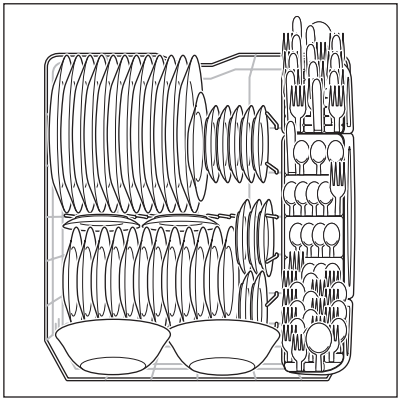

12 place settings standard loading pattern

Fold-down Tines Bottom Rack

The fold-down tines in the lower and upper rack make it easy to load those extra large and hard-to-fit items. The tines may be left up for normal use or folded down for more flexible loading.

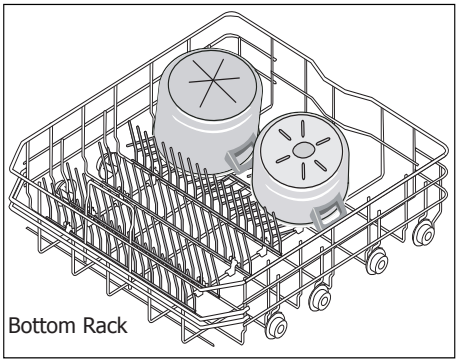

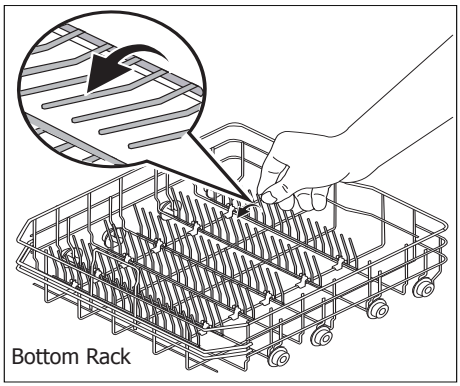

Cup Shelf/Stemware Holders

The Cupshelf holder can be folded down to be used to load two levels of cups, juice glasses, and other short items or fold down both and use for long items such as utensils and spatulas. Fold up to load tall glasses.

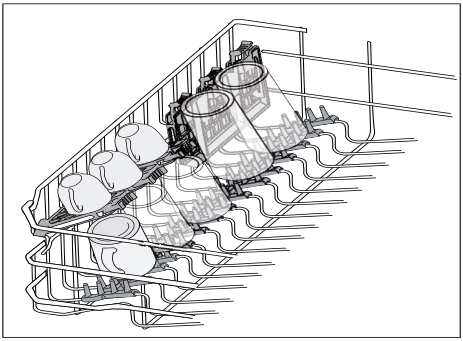

The Stemware holder is used to securely hold your wine glasses in place for the best wash. To properly secure you glass simply press the stem of the glass into the center of the Cupshelf the rubber pieces will secure around the stem to hold the glass in place.

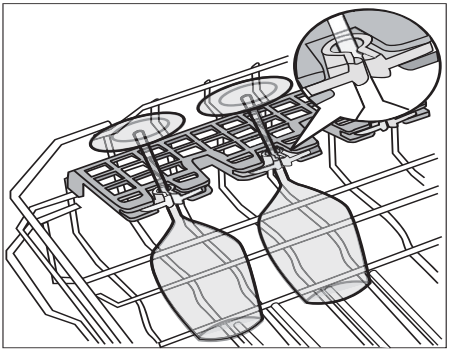

Soft Grip Rack

The Soft Grip Rack is used to secure in place glassware and those plastic items that may move around with the water from the spray arm.

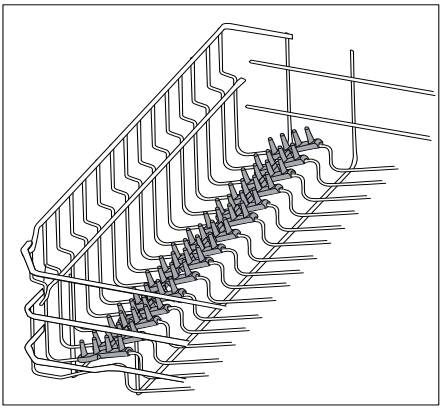

Loading the Silverware Basket

CAUTION

Load sharp items (knives, skewers, etc.) pointing down.

Failure to do so may result in injury.

Features and appearance of racks and silverware basket may vary from your model.

Load the silverware basket while it is in the bottom rack or take the basket out for loading on a counter or table.

In some models small items like baby bottle caps, jar lids, corn cob holders, etc., can be placed in a covered section. Close the cover to hold small items in place.

Use suggested loading patterns, as shown, to increase washability of the silverware.

Be sure nothing protrudes through bottom of basket or rack to block the spray arm.

Do not mix silver and stainless to avoid damaging the silver finish.

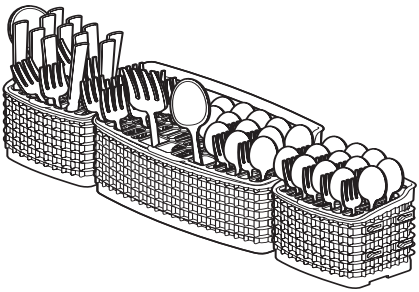

When covers are up, mix items in each section of the basket with some pointing up and some down to avoid nesting. Water spray cannot reach nested items.

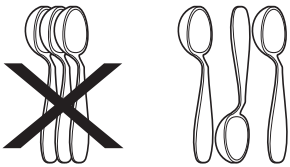

To add or remove items after wash cycle starts:

- Unlatch door and wait a few seconds until wash action stops before opening.
- Add the item and wait a few seconds to allow cold air to slowly expand inside dishwasher.
- Close door firmly to latch and resume cycle.

Filling the Detergent Dispenser

The detergent dispenser has a main wash cup where you will add your detergent or detergent tab.

- Use only fresh automatic dishwashing detergent. Other detergents may cause oversudsing.
- When using automatic dishwashing detergent tablet, place one tablet in main wash cup and close.
- Add detergent just before starting cycle.
- Store detergent in a cool, dry location. Moist or caked detergent may not dissolve properly.

CAUTION

The use of industrial grade detergent can damage parts of the dishwasher leading to damage to the unit and surrounding property. Use only household grade automatic dishwasher detergents.

NOTE

Hard water may cause lime deposit buildup on the interior of the dishwasher. For cleaning instructions see "Removing Spots and film" section.

How much Detergent to use

The amount of detergent to use depends on the water hardness. Water hardness is measured in grains per gallon. Using too little detergent can result in poor cleaning and hard water filming or spotting. Using too much detergent in soft water can cause etching to some glassware which is surface damage that appears like a film but cannot be wiped off. Your local water company, water softener company or county extension agent can tell you the water hardness in your area.

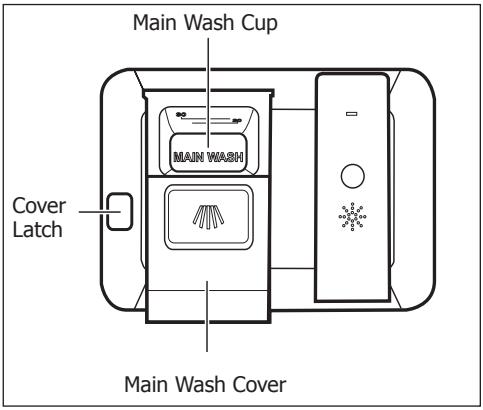

NOTE

Detergent tablets and All-In-One packs may not dissolve completely if used with the QUICK WASH cycles. If one of these products are used, place the tab or pack directly on the bottom of the tub in a corner before starting the dishwasher, rather than placing these products in the dispenser.

NOTE

To achieve the best results from your dishwasher, visit www.dishwashingexpert.com for general tips regarding the performance and operation of your dishwasher.

DISHWASHER DISPENSER & DETERGENTS

Dosage of detergent

Place a single detergent tablet or packet into the detergent dispenser compartment.

Detergent Usage Chart

Water Hardness	Soft Water (0-3 grains)	Medium Hard Water (4-8 grains)	Hard Water (9-12 grains)
Amount (teaspoons)	4 teaspoons	6 teaspoons	8 teaspoons
Dispenser cup level:	First Line	Second Line	Full

NOTE

For very hard water, detergent alone may not be enough. A water softener is recommended to improve water quality and dishwashing performance. Try adding more detergent at the beginning of the main wash portion of the cycle. As a rule, use 1 teaspoon for each grain above 12. Unlatch the door, open slowly and add detergent to the bottom of the tub. Close the door to latch and the dishwasher will continue through the cycle.

Rinse Aid

Rinse aid greatly improves drying, reduces water spots, filming. With it water "sheets" off dishes rather than forming water droplets that cling and leave spots.

A dispenser, located next to the detergent cup, automatically releases a measured amount of rinse aid during the last rinse. If spotting and poor drying are problems, increase the amount of rinse aid dispensed. The indicator will be dark when full and will show clear when it is time to refill.

To add liquid rinse aid, open the cover. Pour in rinse aid until liquid touches the indicated fill level. Close the cover.

Do not overfill since this can cause oversudsing. Wipe up any spills with a damp cloth.

The dispenser holds enough for 11 to 66 washes, depending on setting.

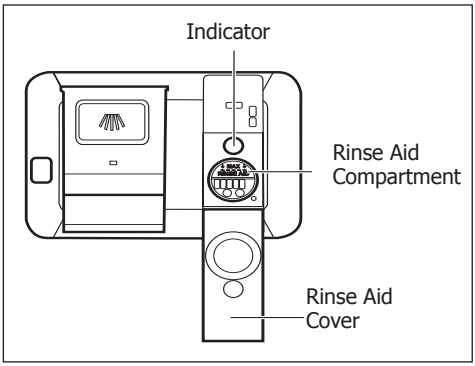

IMPORTANT

Before starting a cycle, run hot water to clear cool water from pipe.

The HEAT DRY option in combination with rinse aid will enhance drying performance. The energy required to use the HEAT DRY option costs pennies per cycle. You may choose not to select the HEAT DRY option; however you will have items in your dish load that will not be completely dry at the end of the cycle.

How to adjust the rinse aid dosage

Press and hold the RINSE ONLY and DELAY START pad for 5 seconds until the display shows rinse aid level. Pressing the DELAY START pad increases the increment level (L0-L6).

Once the rinse-aid level reaches L6, the display will start back at level L0.

Pressing the START button or just pausing for a few seconds confirms the rinse aid level setting: the display shows the duration of the cycle.

Water Pressure

The hot water line to dishwasher must provide water pressure between 20 and 120 psi.

Low water pressure may occur when laundry or showers are in operation. If you experience poor wash performance you may need to wait until water use is reduced before starting the dishwasher.

Water Temperature

Hot water is needed for best dishwashing and drying results. Water entering dishwasher should be at least 120°F (49°C) to give satisfactory results.

To check water temperature entering dishwasher:

- Turn on hot water faucet nearest dishwasher for several minutes to clear cool water from pipes.
- Hold a candy or meat thermometer in the water stream to check the temperature.
- If temperature is below 120°F (49°C), have a qualified person raise the hot water heater thermostat setting.

Outside - Occasionally wipe with a mild nonabrasive detergent and water. Rinse and dry.

Care of Drain Air Gap

If a drain air gap was installed for your built-in dishwasher, check to make sure it is clean so the dishwasher will drain properly. A drain air gap is usually mounted on the counter top and can be inspected by removing the cover. This is not part of your dishwasher and is not covered by warranty.

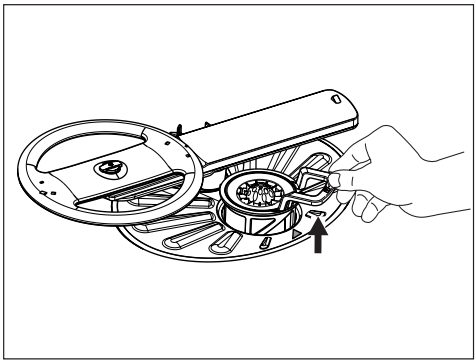

Clean the Cylinder Fine Filter

The Cylinder Fine Filter is designed to collect some big items such as broken glass, bones and pits. The Cylinder Fine Filter needs to be cleaned to maximize wash performance.

Remove the Cylinder Fine Filter as shown, rotate it counterclockwise, lift it out, empty and clean it by rinsing under running water and replace. Use of a sponge or bottle brush may be necessary to remove all food residue.

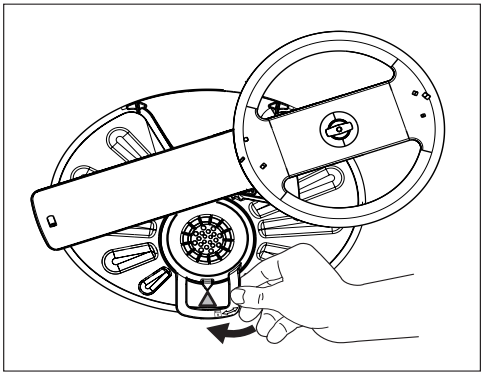

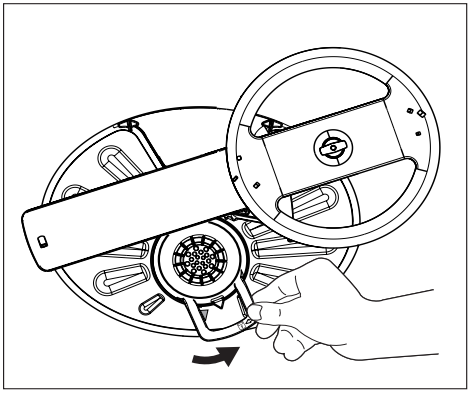

Clean the Coarse Filter

Take out the Cylinder Fine Filter and remove the Coarse Filter from the dishwasher tub bottom. Flush the Coarse Filter by holding it under running water and replace.

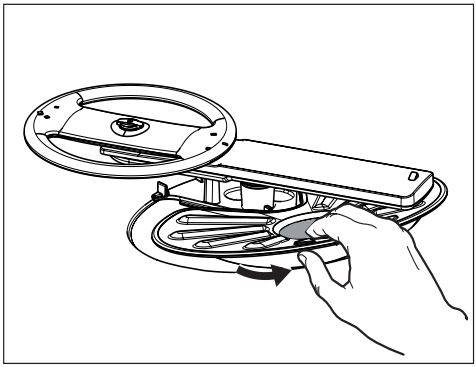

Winterizing

A dishwasher left in an unheated place should be protected from freezing. Have a qualified person do the following:

To Disconnect Service:

1. Turn off electrical power to the dishwasher at the supply source by removing fuses or tripping circuit breaker.
2. Shut off water supply.
3. Place a pan under the inlet valve. Disconnect water line from the inlet valve and drain into pan.
4. Disconnect drain line from pump and drain water into pan.

To Restore Service:

1. Reconnect the water, drain, and electrical power supply.
2. Turn on water and electrical power supply
3. Fill detergent cup and run the dishwasher through a POWER PLUS/HEAVY WASH cycle.
4. Check connections to make sure they do not leak.

CAUTION

Property Damage Hazard

Freezing temperatures may cause water lines to rupture. Be sure all supply lines to and circulating lines within dishwasher are protected.

Failure to do so could result in property damage.

NOTE

See Installation Instructions for more details on disconnecting and restoring service to your dishwasher.

NOTE

To achieve the best results from your dishwasher, visit www.dishwashingexpert.com for general tips regarding the performance and operation of your dishwasher.

Before calling for service, review this list. It may save you both time and expense. This list includes common experiences that are not the result of defective workmanship or material in your dishwasher.

Food Soils Left on Dishes

- Choose another cycle for longer washing time.
- Choose the Hi-Temp Wash option.
- Check rack loading section for proper loading-avoid nesting items.
- Home water pressure may be too low - should be 20 to 120 pounds per square inch (psi).
- Check incoming water temperature. It should be at least 120°F (49°C). (See Factors Affecting Performance.)
- Check water hardness. For extremely hard water, it may be necessary to install a water softener. (See Detergent Chart).
- Use Fresh Detergent.
- Make sure items are not blocking the spray arms, preventing them from rotating.

Dishes not Dry

- Select heat dry option.
- Make sure the rinse aid dispenser is filled.
- Increase the discharge setting of rinse aid. (See Rinse Aid).
- Check the incoming water temperature. Be sure it is at least 120°F (49°C).
- Check for proper loading-avoid nesting items.
- Plastic items may need to be towel dried.
- Cups with a concave bottom will collect water. Load them at the far left of the upper rack so they will be held in a tilted position.

BEFORE YOU CALL

Glassware/Flatware Spotted or Cloudy

- Check water hardness. For extremely hard water, it may be necessary to install a water softener. (See Detergent Chart).
- Water temperature may be low. Avoid extremely low or high temperatures. (See Factors Affecting Performance.
- Avoid overloading and improper loading. (See Preparing and Loading Dishes).
- Use fresh detergent. Old detergent is ineffective.
- Make sure rinse aid dispenser is filled.
- Check to see that proper amount of detergent is being used for cycle selected. Also, check phosphate level. (See Detergent Dispenser.)
- Home water pressure may be too low - it should be 20 to 120 pounds per square inch (psi).

Dishware Chipped

- Load with care and do not overload. (See Preparing and Loading Dishes).
- Place delicate items in top rack.
- Place glasses securely against pins and not over pins.
- Load items so they are secure and don't jar loose when moving racks in and out. Move racks in and out slowly.
- Make sure tall glasses and stemware will clear top of tub when rack is pushed in.
- Fine antique china and crystal should be hand-washed.

Water in Bottom of Tub

- Water left in the tub bottom after the cycle is complete is not normal. If water remains in the bottom of the tub, the dishwasher may not be draining properly. (See Dishwasher Does not Drain Properly).

Dishware Stained or Discolored

- Tea and coffee can stain cups. Remove the stains by hand washing in a solution of 1/2 cup (120 ml) bleach and one quart (1L) of warm water. Rinse thoroughly.
- Iron deposits in water can cause a yellow or brown film. A special filter installed in the water supply line will correct this problem. (See Removing Spots and Film).
- Aluminum utensils can leave gray/black marks when they rub against other items. Load Properly.
- Certain high acid foods can cause discoloration of stainless steel and plastics if allowed to sit for a long period. Use the Rinse Only cycle or rinse by hand if not operating dishwasher at once.
- Mixing stainless steel and silver utensils in silverware basket can cause pitting of the stainless steel blades. Avoid mixing stainless steel and silver.

Cycle Takes a Long Time

- Is cycle in a water heating delay?
- Has the delay start option been selected?
- Has the sanitize option been selected?

Normal Sounds You Will Hear

- Normal sounds include water fill, water circulation and motor sounds.

Dishwasher Leaks

- Use only fresh detergent designed for automatic dishwashers. Measure detergent carefully. Try a different brand.

Etching

- Using too much detergent especially in soft or softened water causes damage that looks like a film but cannot be removed.
- Adjust the amount of detergent based on the water hardness. (Check Detergent Chart).
- Lower the water temperature.

Detergent Left in Dispenser Cup

- Detergent may be old. Discard and use fresh detergent.
- Be sure the dish load doesn't block spray from entering the detergent cup.
- Check to see if cycle has been completed.
- Make sure items do not prevent the detergent dispenser from opening.

Vapor at Vent

- Spilled rinse aid can cause foam and lead to overflowing. Wipe up any spills with a damp cloth.
- Check to see that dishwasher is level. (See Installation Instructions).

Dishwasher Won't Run

- Check to see if circuit breaker is tripped or if a fuse is blown.
- Make sure water supply is turned on.
- Check to see if cycle is set correctly. (See Operating Instructions).
- Is dishwasher set for Delay Start Option?
- Make sure door is closed and latched.

Dishwasher Won't Fill

- Is water supply turned on?

Dishwasher Does Not Drain Properly

- If unit is hooked up to a food waste disposer, make sure the disposer is empty.
- Check to see if the knockout plug has been removed from inside the food waste disposer inlet.
- Check to see if drain hose is kinked.
- Make sure cycle is complete, not in a pause.

Dishwasher has an Odor

- Soiled dishes left in dishwasher too long can create an odor. Use Rinse Only cycle.
- There will be a "new" smell when first installed. This is normal.
- Check to see if unit is draining properly. (See Dishwasher Does Not Drain Properly).

Stains on Tub Interior

- Washing large amounts of dishware with tomato based soil can cause a pink/orange appearance. This will not affect performance and will gradually fade over time. Pre-rinsing or using the Rinse Only cycle will reduce the chance of staining. Using air dry option will lessen staining.

Removing Spots and Film

Hard water can cause lime deposit buildup on the interior of the dishwasher. Dishes and glasses may also get spots and film for a number of reasons. (See Glassware/Flatware Spotted or Cloudy section). To remove buildup, and film, clean using the following instructions:

1. Load clean dishes and glasses in normal manner. Do not load any metal utensils or silverware.
2. Do not add detergent.
3. Select the NORMAL WASH cycle. Press START/CANCEL pad. Close and latch the door.
4. Allow dishwasher to run until it starts the second water fill (approximately 10 minutes).
5. Unlatch an and open door and pour 2 cups of white vinegar into the bottom of dishwasher.
6. Close and latch door and allow cycle to finish.

MAJOR APPLIANCE WARRANTY

Your appliance is covered by a one year limited warranty. For one year from your original date of purchase, Electrolux will pay all costs for repairing or replacing any parts of this appliance that prove to be defective in materials or workmanship when such appliance is installed, used and maintained in accordance with the provided instructions.

Exclusions

This warranty does not cover the following:

1. Products with original serial numbers that have been removed, altered or cannot be readily determined.
2. Product that has been transferred from its original owner to another party or removed outside the USA or Canada.
3. Rust on the interior or exterior of the unit.
4. Products purchased "as-is" are not covered by this warranty.
5. Food loss due to any refrigerator or freezer failures.
6. Products used in a commercial setting.
7. Service calls which do not involve malfunction or defects in materials or workmanship, or for appliances not in ordinary household use or used other than in accordance with the provided instructions.
8. Service calls to correct the installation of your appliance or to instruct you how to use your appliance.
9. Expenses for making the appliance accessible for servicing, such as removal of trim, cupboards, shelves, etc., which are not a part of the appliance when it is shipped from the factory.
10. Service calls to repair or replace appliance light bulbs, air filters, water filters, other consumables, or knobs, handles, or other cosmetic parts.
11. Surcharges including, but not limited to, any after hour, weekend, or holiday service calls, tolls, ferry trip charges, or mileage expense for service calls to remote areas, including the state of Alaska.
12. Damages to the finish of appliance or home incurred during installation, including but not limited to floors, cabinets, walls, etc.
13. Damages caused by: services performed by unauthorized service companies; use of parts other than genuine Electrolux parts or parts obtained from persons other than authorized service companies; or external causes such as abuse, misuse, inadequate power supply, accidents, fires, or acts of God.

DISCLAIMER OF IMPLIED WARRANTIES; LIMITATION OF REMEDIES

CUSTOMER'S SOLE AND EXCLUSIVE REMEDY UNDER THIS LIMITED WARRANTY SHALL BE PRODUCT REPAIR OR REPLACEMENT AS PROVIDED HEREIN. CLAIMS BASED ON IMPLIED WARRANTIES, INCLUDING WARRANTIES OF MERCHANTABILITY OR FITNESS FOR A PARTICULAR PURPOSE, ARE LIMITED TO ONE YEAR OR THE SHORTEST PERIOD ALLOWED BY LAW, BUT NOT LESS THAN ONE YEAR. ELECTROLUX SHALL NOT BE LIABLE FOR CONSEQUENTIAL OR INCIDENTAL DAMAGES SUCH AS PROPERTY DAMAGE AND INCIDENTAL EXPENSES RESULTING FROM ANY BREACH OF THIS WRITTEN LIMITED WARRANTY OR ANY IMPLIED WARRANTY. SOME STATES AND PROVINCES DO NOT ALLOW THE EXCLUSION OR LIMITATION OF INCIDENTAL OR CONSEQUENTIAL DAMAGES, OR LIMITATIONS ON THE DURATION OF IMPLIED WARRANTIES, SO THESE LIMITATIONS OR EXCLUSIONS MAY NOT APPLY TO YOU. THIS WRITTEN WARRANTY GIVES YOU SPECIFIC LEGAL RIGHTS. YOU MAY ALSO HAVE OTHER RIGHTS THAT VARY FROM STATE TO STATE.

If You Need Service

Keep your receipt, delivery slip, or some other appropriate payment record to establish the warranty period should service be required. If service is performed, it is in your best interest to obtain and keep all receipts. Service under this warranty must be obtained by contacting Electrolux at the addresses or phone numbers below.

This warranty only applies in the USA and Canada. In the USA, your appliance is warranted by Electrolux Major Appliances North America, a division of Electrolux Home Products, Inc. In Canada, your appliance is warranted by Electrolux Canada Corp. Electrolux authorizes no person to change or add to any obligations under this warranty. Obligations for service and parts under this warranty must be performed by Electrolux or an authorized service company. Product features or specifications as described or illustrated are subject to change without notice.

USA
1.800.944.9044
Frigidaire
10200 David Taylor Drive
Charlotte, NC 28262

Canada
1.800.265.8352
Electrolux Canada Corp.
5855 Terry Fox Way
Mississauga, Ontario, Canada
L5V 3E4